Design Review: PhytoPi

NOLAN TUTTLE

DANIEL GRIJALVA

Agenda

- Overview
- Customer Feedback
- Requirements
- Engineering Standards
- Design Specifications
- Finalized BOM
- Simulations and supporting data
- Finalized timeline
- Next Steps

Overview

What is PhytoPi?

- Our solution for gardening hobbyists and experienced indoor growers
- Using hardware and software solutions, we aim to reduce or eliminate all traditional plant maintenance requirements.

Design Concept Features:

- Automatic Watering/Lighting
- Raspberry Pi 5 Control Hub
- Real-time Monitoring via Mobile App
- Protective Waterproofed Enclosure

Customer Feedback

What Users Want	How We Addressed It
Simplicity and ease of use	Simplified, intuitive design with touchscreen
Automation to reduce manual plant care	Sensor-driven auto-watering and auto-light scheduling
Simple, intuitive UI for beginners	Minimal dashboard, color-coded plant status
Mobile access to live data for technical users	Mobile interface with live sensor readings

Requirements

Sensor Monitoring & Data Collection	System reads soil moisture, water level, temperature, and humidity data.
Automated Watering Control	Pump activates automatically based on moisture thresholds.
Manual & Remote Controls	Users can trigger watering and adjust thresholds via software interface.
System Status & Error Handling	Detects faults and reports them in real time.

Engineering Standards

ID	Requirement	Relation to Customer Feedback	Engineering Standard
FR-036	The system shall trigger automatic watering when moisture is below threshold.	Directly answers beginners' desire for automation and reduces manual watering work.	IEEE 7009-2024: Fail-safe design for autonomous systems
FR-017	The system shall display real-time data on the main dashboard.	Matches technical users' need for live data and enables quick situational awareness for all users.	IEEE 2413-2019: IoT architecture
FR-013	The system shall generate and display graphical growth trends using plant data.	Fulfills experienced and curious users' desire to track progress and informs care decisions.	IEEE 1012-2016: Verification & Validation
FR-016	The system shall push notifications to the user's device reading thresholds are exceeded	Covers scheduling/alert needs for experienced users and mobile/live-alert expectations for technical users.	IEEE 7009-2024: Fail-safe design for autonomous systems

Design Specifications

ID	REQUIREMENT	RELATION TO CUSTOMER FEEDBACK	ENGINEERING STANDARD
NFR-008	Data validation process must complete in under 100ms per reading.	Supports users' desire for real-time awareness and reduces confusion by ensuring plant data is always up-to-date.	ISO/IEC 25010: Software Quality Model – Performance Efficiency
NFR-023	The automatic watering system should respond within 15 seconds of unexpected soil moisture levels.	Addresses customer stress about watering by ensuring the system reacts quickly when moisture levels drop unexpectedly.	ISO/IEC 25010: Performance Efficiency & Functional Suitability
NFR-031	System uptime when collecting readings is >99%	Reflects users' need for dependable automation and consistent monitoring without gaps or missed alerts.	ISO/IEC 27001: Operational continuity & reliability controls
NFR-006	Dashboard data refresh rate shall not exceed 5 second delay from actual sensor input.	Aligns with users wanting quick, intuitive access to plant status and real-time updates on environmental changes.	ISO/IEC 25010: Usability & Performance Efficiency

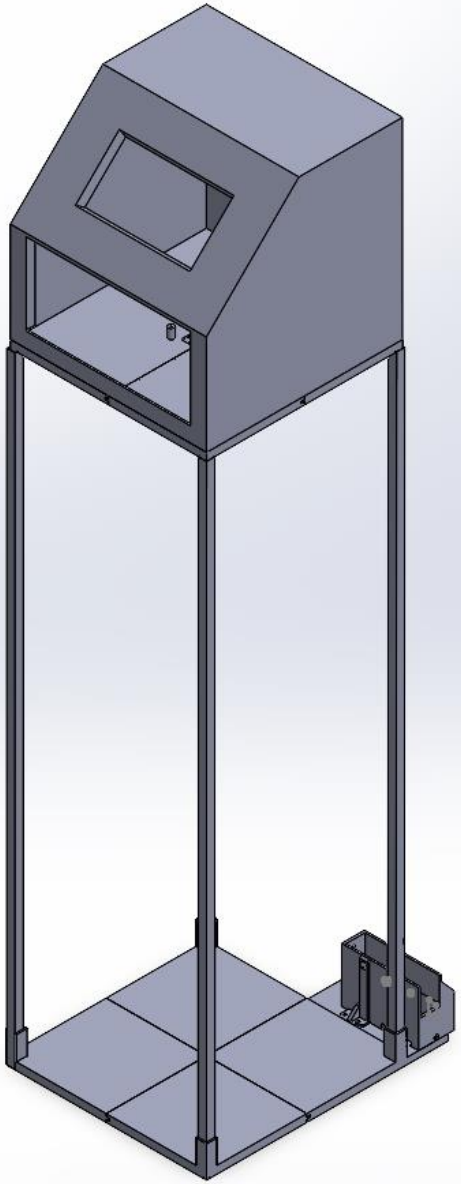

Design Concepts: Plant Enclosure

Our current plant enclosure features:

- Cable routing channel through acrylic frame
- Space for 1 plant pot
- Front panel access via Velcro closure
- Mounting points for actuators
- Modular design for scaling number of plants
- Designed for printing on any standard 3D printer bed size
- Screen and LED matrix bezel for displaying dashboard and visually appealing capstone showcase.

AI representation of final prototype

Smart Grow Enclosure — Key Specifications

Structure & Access

- Fabric enclosure with Velcro-sealed front access panel
- Reflective Mylar interior for light efficiency
- Reinforced aluminum frame with modular lower compartment

Lighting System

- Full-spectrum LED light strips arranged in parallel rows
- PWM-controlled brightness (0–100%)
- 24 V power rail

Sensing & Monitoring

- Temperature & humidity (BME680)
- Soil moisture + water level sensors
- Internal camera for plant health inference

Control & Data

- Raspberry Pi 5 main controller
- Local SQLite storage + cloud sync (Supabase)
- Real-time UI via Flutter dashboard

Environmental Control

- Intake/exhaust fan array for airflow
- Automated watering pump system
- Closed-loop feedback control

Design Concepts: Hardware Enclosure

Our 3D-printed hardware enclosure offers access to the wiring harness route through the acrylic frame.

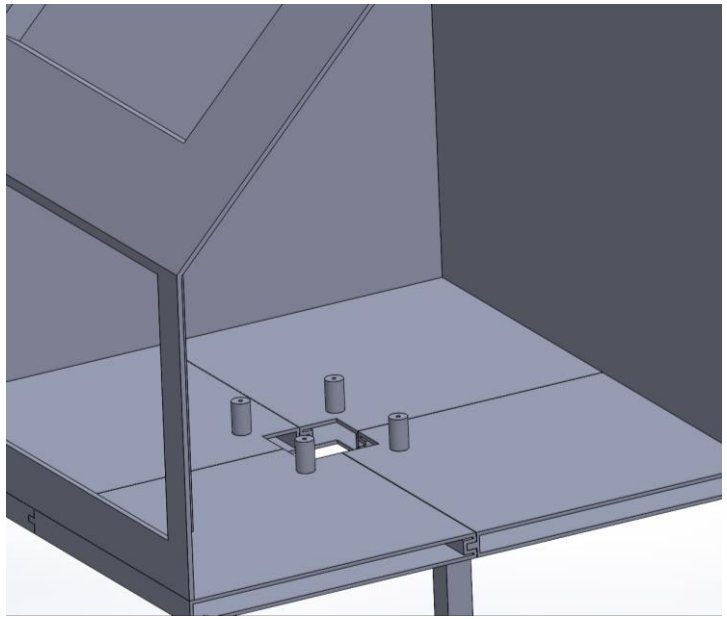

Sensors were selected for a compact, minimal wiring harness. All sensors support either direct GPIO read or I2C protocol.

Access port ventilation and hollow corner pieces for routing through acrylic columns.

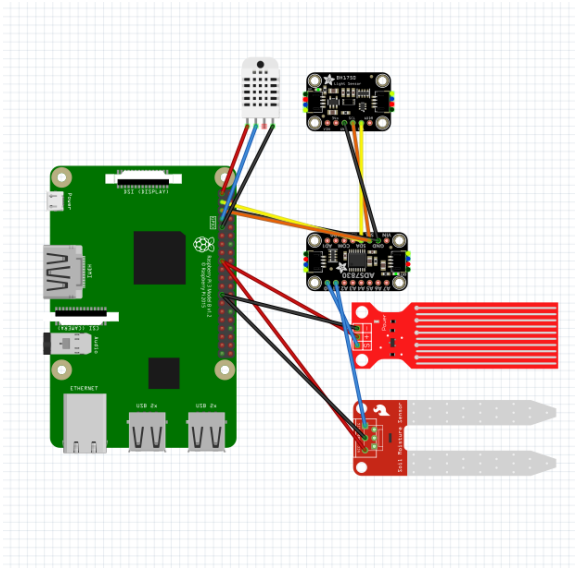

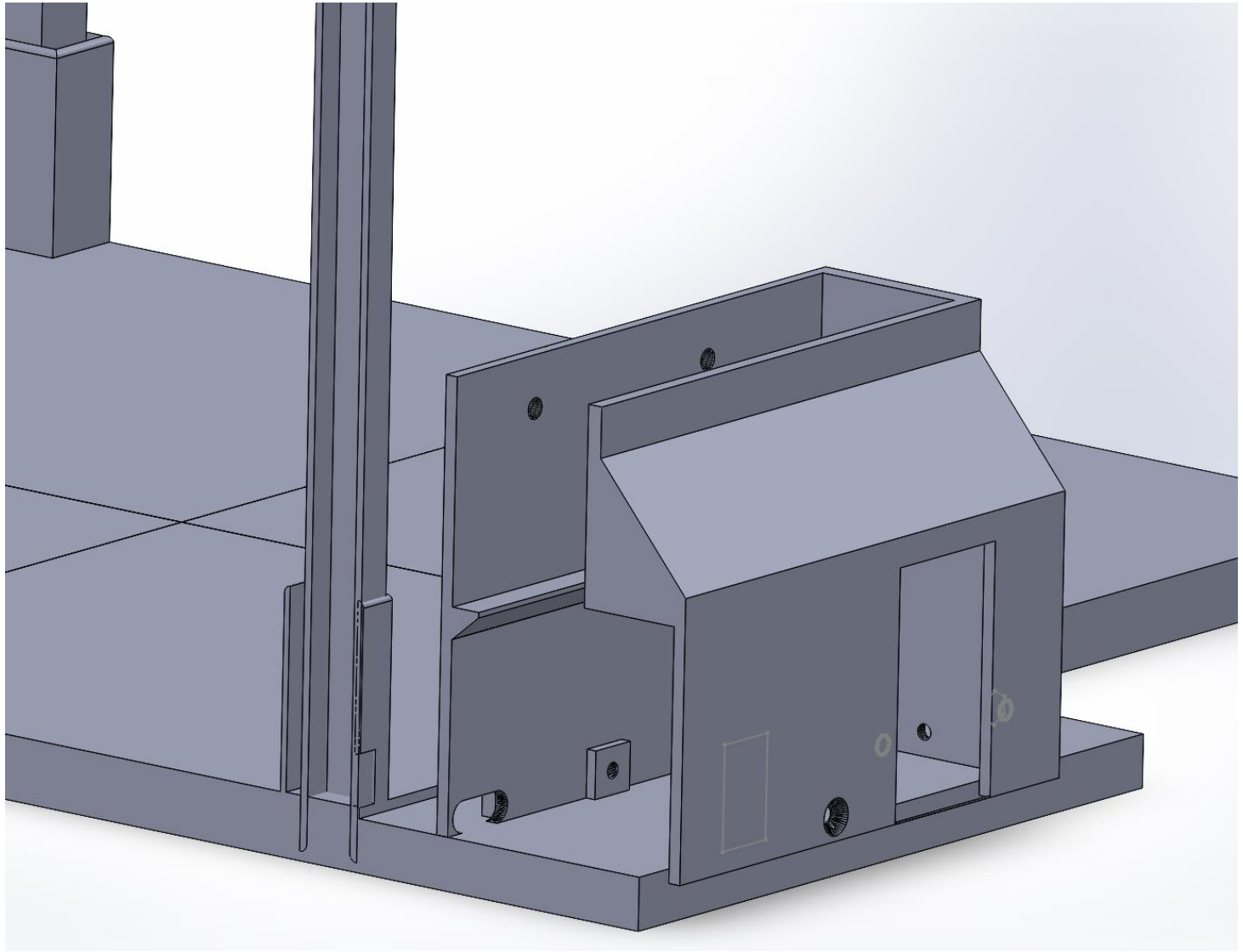

Design Concepts: Power Supply

- Two mounting screws in back, allowing heat-set inserts in enclosure base to screw PS holder into.
- Screw cuts for M3 screws to secure power supply.
- Lip and bottom section allows easy wiring hookup and exit through the back into column.

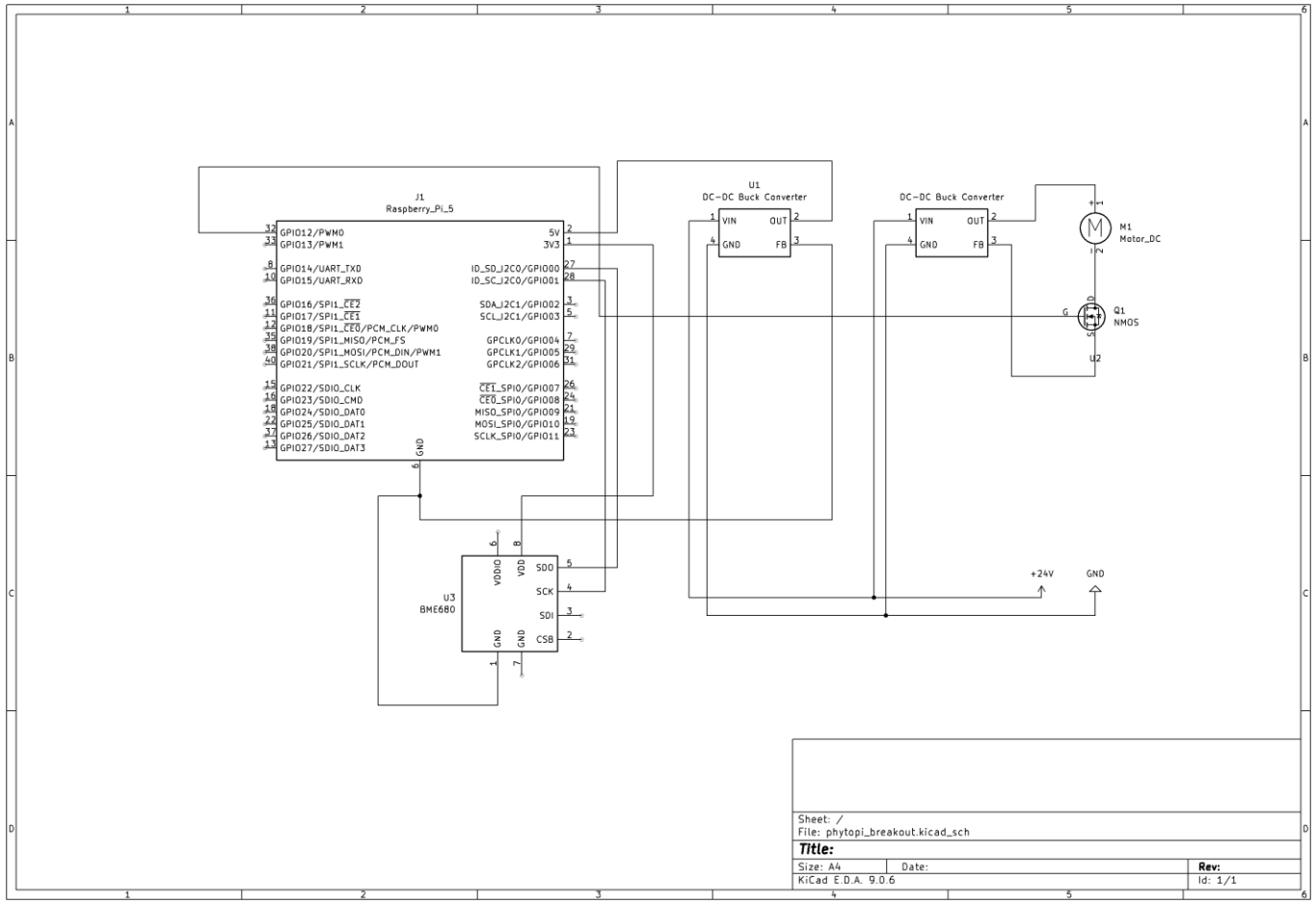

Design Concepts: Electrical Design

- Our electrical design was the focus of significant improvement, moving from I2C multiplexing and sensors on a large scale to the bare minimum sensors needed for empirical, actionable data.
- MOSFET-switched lights and water pump
- Efficient 24V power supply with easy-to-use wall plug
- BME680 temp/hum/gas sensor

Main Hardware Design Tradeoffs

- **Hybrid walls (fabric + rigid parts) instead of fully rigid panels**
- **Optional “nice-to-have” sensors deferred (cost control)**
- **Size/height constraint drove capability limits**
- **Simplicity & reliability over maximum adjustability**
- **Lower-cost airflow implementation vs fine-grained control**

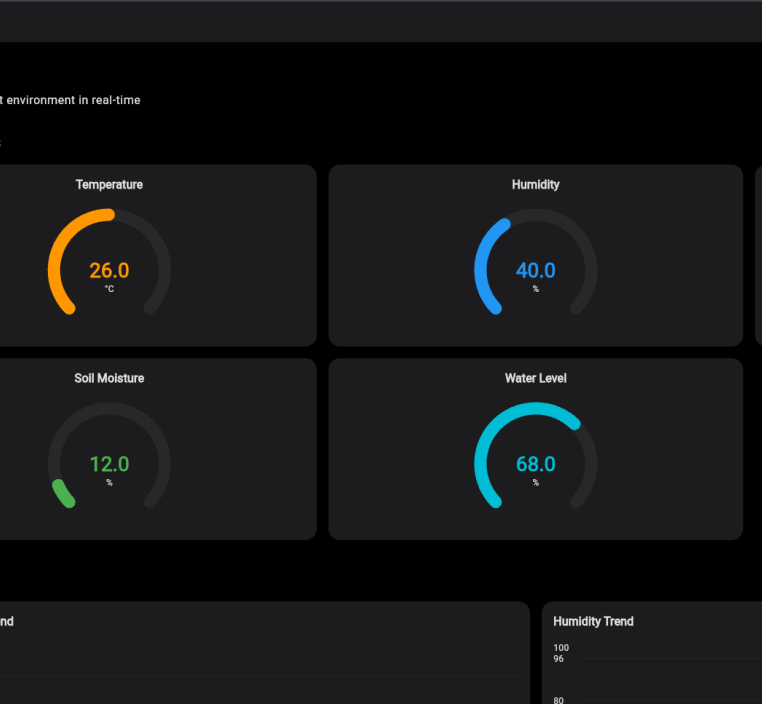

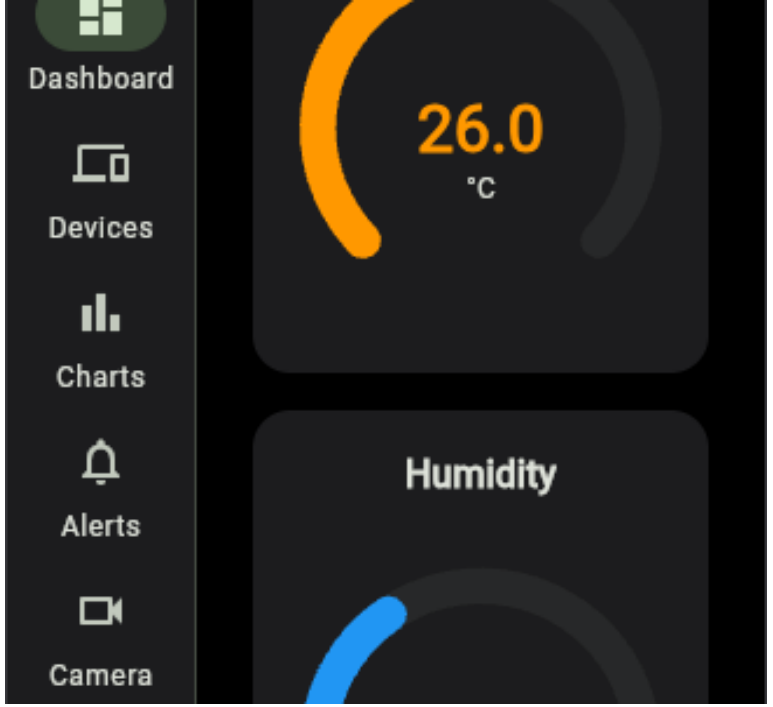

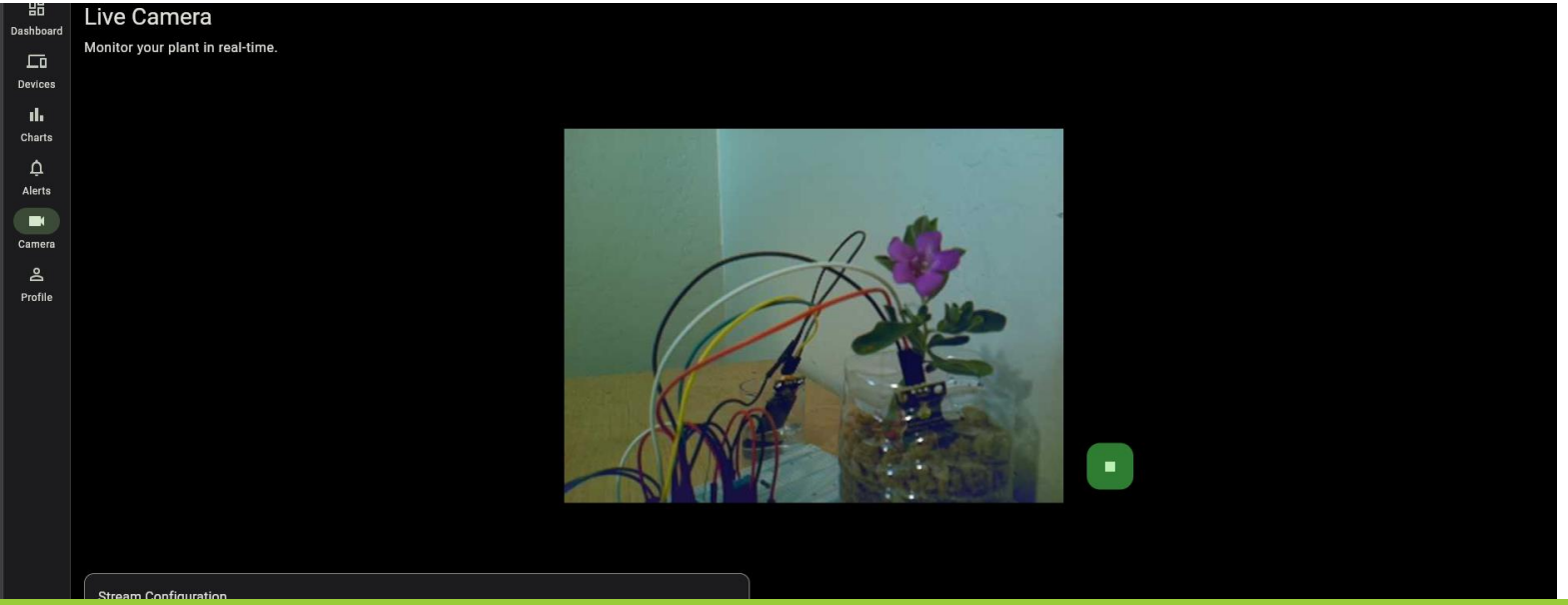

Design Concepts: Mobile/Web App

Design Concepts: Pi-Controller (C program & command line services)

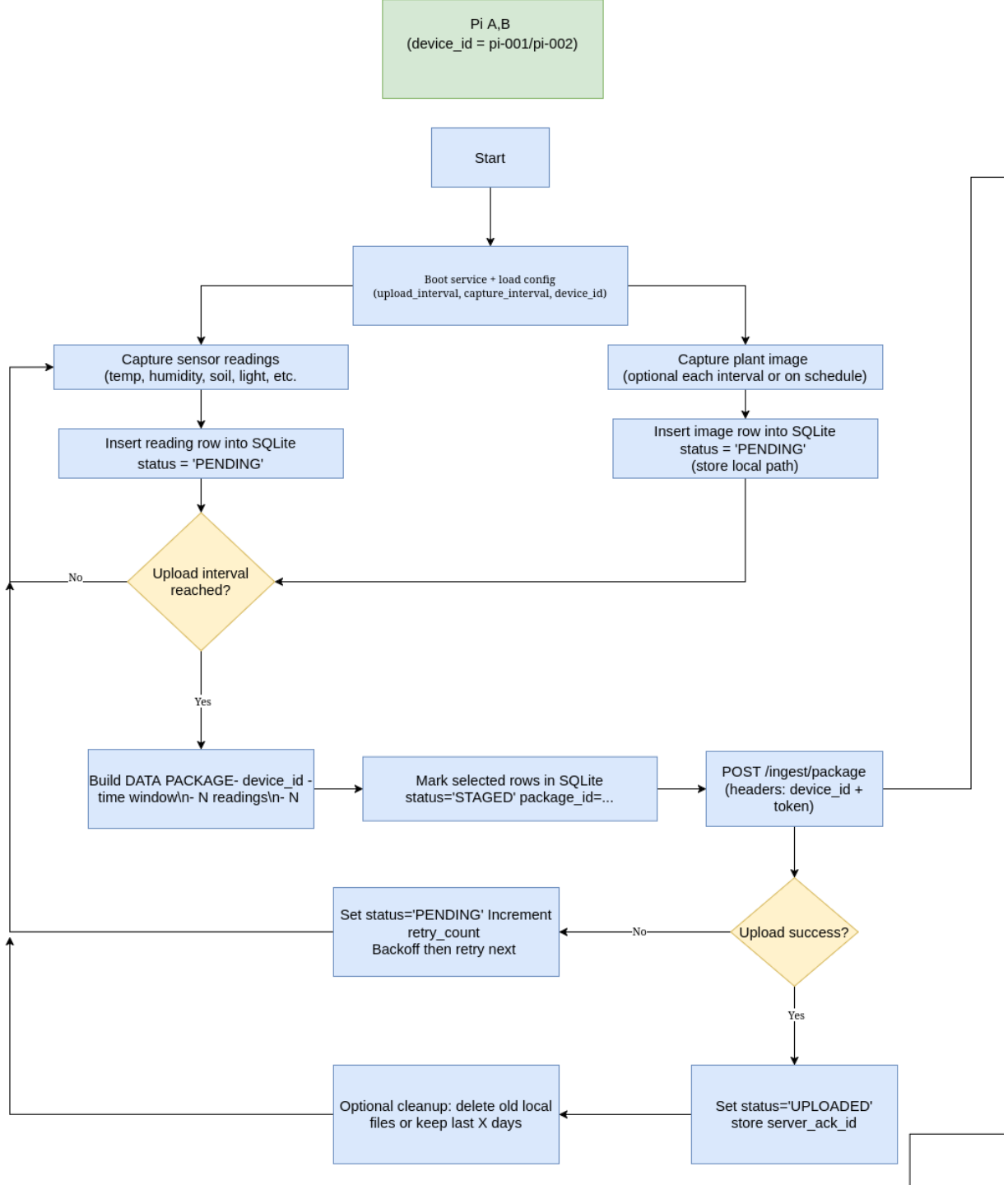

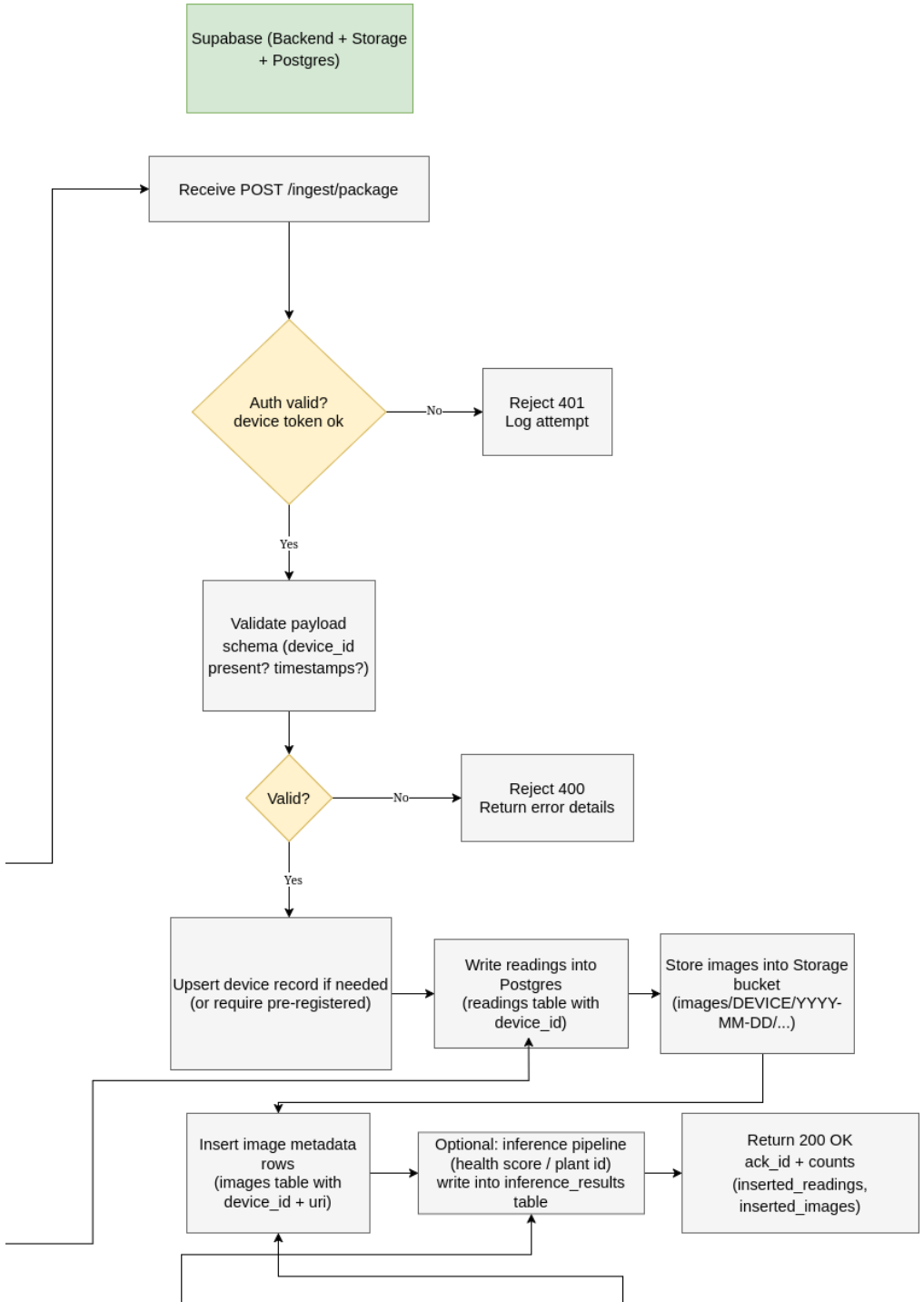

Design Concepts: Database Flow (Supabase DB)

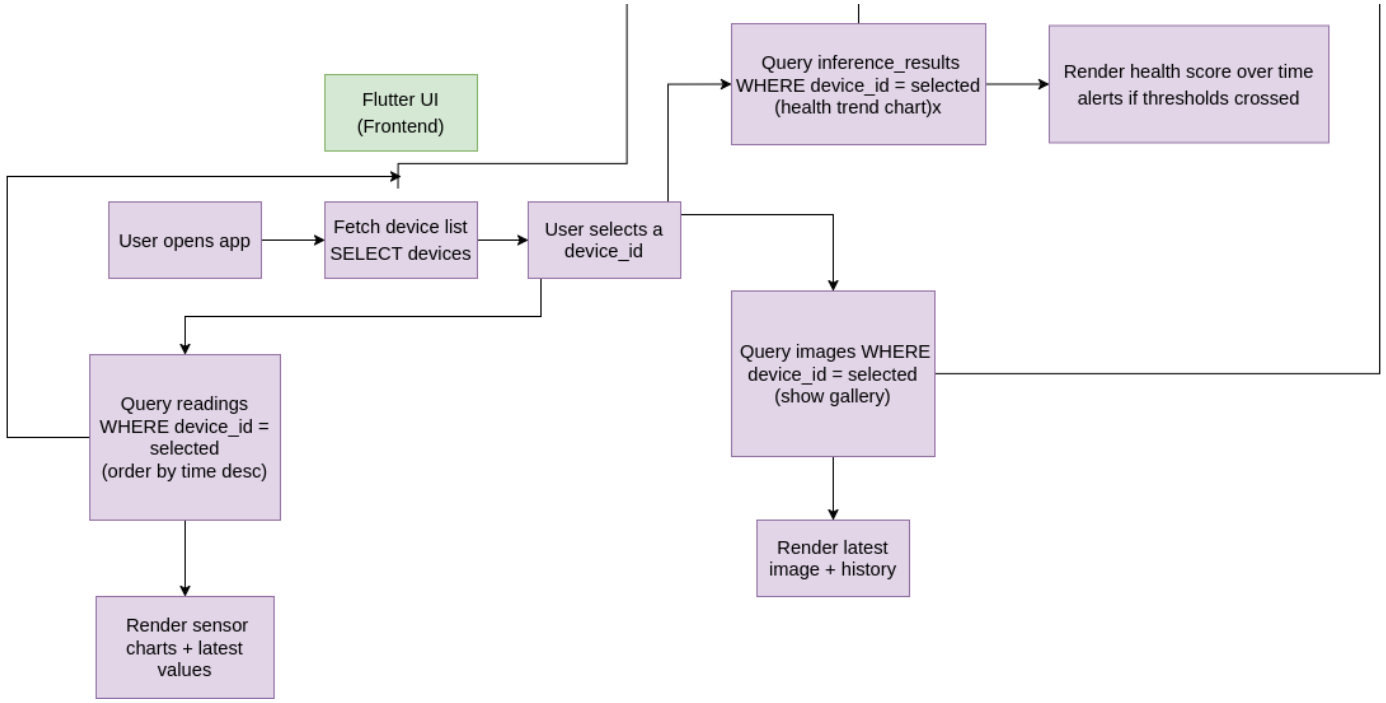

Design Concepts: User Flow (Flutter UI)

Design Concepts: Image Recognition (Plant Health)

1. Machine learning model for image recognition on total leaf area index (LAI).
2. Further training using existing LAI dataset to classify disease, wilting, etc with relative accuracy using a larger cloud-connected model running on a machine with more power.

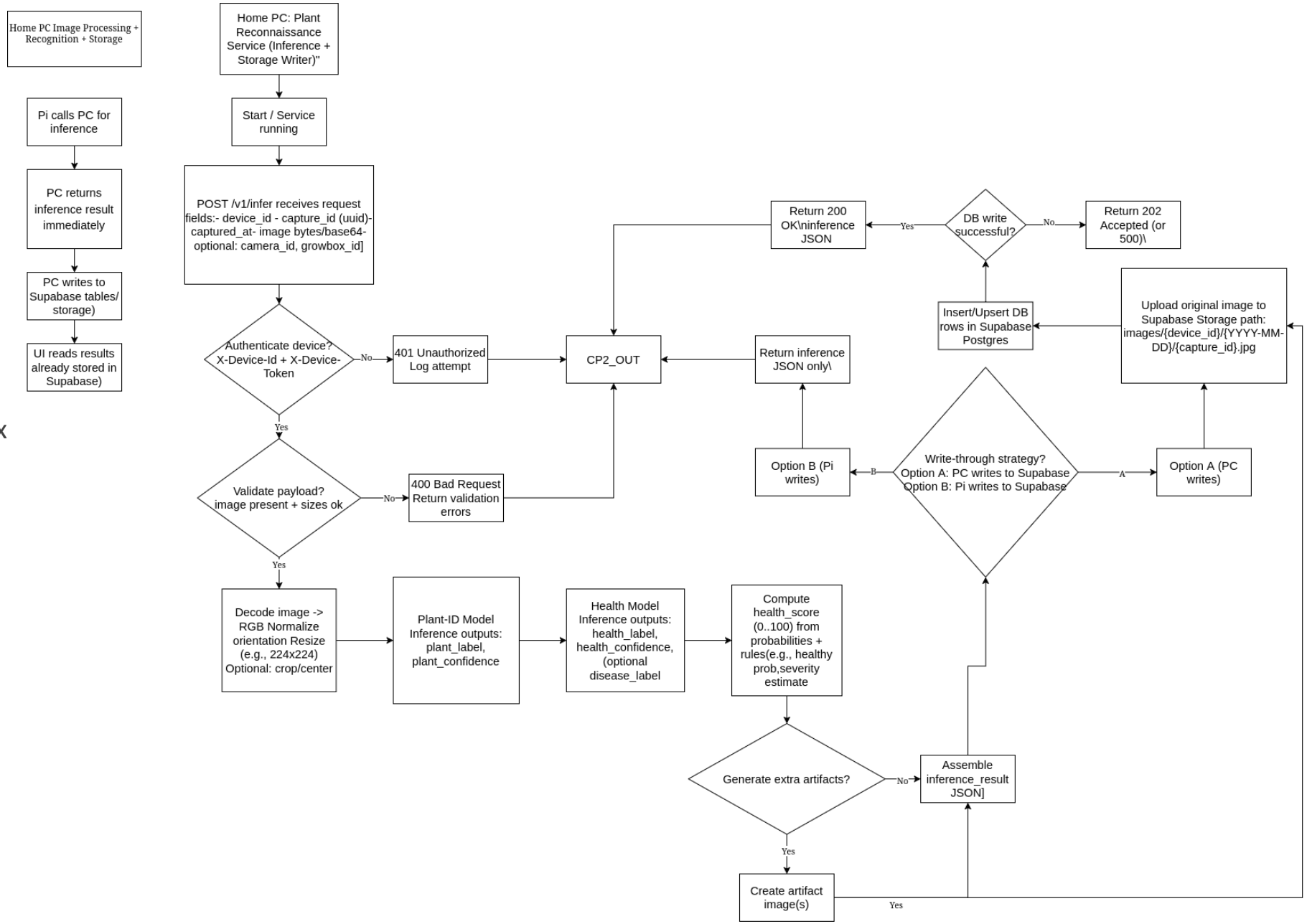

Software Design Tradeoffs (and why)

- MVP scope over “full platform”
- Supabase Edge + RLS vs custom backend
- Offline-first Pi agent (SQLite queue) vs real-time-only cloud writes
- Batch ingestion vs streaming everything
- Simple device identity (pairing code → permanent secret) vs heavier PKI
- Cross-platform Flutter vs separate native apps
- Security controls (rate limiting, monitoring) vs absolute simplicity

Simulations & Supporting Data

```
[1764565983] Readings: Soil=13, Water=70, Light=115, Hum=40%, Temp=26C
  -> Saved Water (Val: 70->70)
Found 1 unsynced readings, syncing to Supabase...
Successfully sent 1 readings to Supabase (HTTP 201)
Marked 1 readings as synced
[1764565985] Readings: Soil=13, Water=70, Light=114, Hum=40%, Temp=26C
[1764565988] Readings: Soil=13, Water=70, Light=116, Hum=40%, Temp=26C
[1764565990] Readings: Soil=13, Water=70, Light=114, Hum=40%, Temp=26C
[1764565992] Readings: Soil=13, Water=71, Light=114, Hum=40%, Temp=26C
[1764565994] Readings: Soil=13, Water=70, Light=115, Hum=40%, Temp=26C
[1764565996] Readings: Soil=12, Water=70, Light=114, Hum=40%, Temp=26C
[1764565998] Readings: Soil=12, Water=70, Light=114, Hum=40%, Temp=26C
[1764566000] Readings: Soil=13, Water=70, Light=116, Hum=40%, Temp=26C
[1764566002] Readings: Soil=13, Water=70, Light=116, Hum=40%, Temp=26C
[1764566004] Readings: Soil=13, Water=70, Light=115, Hum=40%, Temp=26C
[1764566006] Readings: Soil=13, Water=70, Light=115, Hum=40%, Temp=26C
[1764566008] Readings: Soil=13, Water=70, Light=114, Hum=40%, Temp=26C
[1764566010] Readings: Soil=13, Water=70, Light=115, Hum=40%, Temp=26C
[1764566012] Readings: Soil=13, Water=70, Light=115, Hum=40%, Temp=26C
  -> Saved Temp/Hum (Hum: 40->40, Temp: 26->26)
Found 1 unsynced readings, syncing to Supabase...
Successfully sent 2 readings to Supabase (HTTP 201)
Marked 1 readings as synced
[1764566014] Readings: Soil=13, Water=70, Light=116, Hum=40%, Temp=26C
[1764566016] Readings: Soil=13, Water=69, Light=116, Hum=40%, Temp=26C
[1764566018] Readings: Soil=13, Water=70, Light=115, Hum=40%, Temp=26C
[1764566020] Readings: Soil=13, Water=70, Light=114, Hum=40%, Temp=26C
[1764566022] Readings: Soil=13, Water=70, Light=114, Hum=40%, Temp=26C
[1764566024] Readings: Soil=12, Water=70, Light=114, Hum=40%, Temp=26C
[1764566026] Readings: Soil=13, Water=70, Light=115, Hum=40%, Temp=26C
[1764566028] Readings: Soil=14, Water=70, Light=115, Hum=40%, Temp=26C
[1764566030] Readings: Soil=13, Water=69, Light=116, Hum=40%, Temp=26C
[1764566032] Readings: Soil=13, Water=69, Light=116, Hum=40%, Temp=26C
[1764566034] Readings: Soil=13, Water=69, Light=116, Hum=40%, Temp=26C
[1764566036] Readings: Soil=13, Water=70, Light=115, Hum=40%, Temp=26C
```

720	5f3e40f3-7a24-4df2-8225-6b249...	2025-12-01 05:18:34+00	26	{}	2025-12-01 05:18:36.481044+0(
721	9204a062-b099-4022-8171-b12f14...	2025-12-01 05:20:48+00	11	{}	2025-12-01 05:20:48.570972+0(
722	6a0689c8-4328-43e5-865e-c0cd...	2025-12-01 05:21:49+00	114	{}	2025-12-01 05:21:53.483059+0(
723	e09141e1-aee2-4ef1-8e35-52500c...	2025-12-01 05:23:04+00	68	{}	2025-12-01 05:23:06.390763+0
724	61a4ce5e-38c6-44ab-8f5a-1b5153...	2025-12-01 05:23:34+00	40	{}	2025-12-01 05:23:37.072808+0(
725	5f3e40f3-7a24-4df2-8225-6b249...	2025-12-01 05:23:34+00	26	{}	2025-12-01 05:23:37.072808+0(
726	9204a062-b099-4022-8171-b12f14...	2025-12-01 05:25:49+00	10	{}	2025-12-01 05:25:51.717772+00
727	6a0689c8-4328-43e5-865e-c0cd...	2025-12-01 05:26:50+00	114	{}	2025-12-01 05:26:50.668253+0
728	e09141e1-aee2-4ef1-8e35-52500c...	2025-12-01 05:28:05+00	68	{}	2025-12-01 05:28:07.790348+0(
729	61a4ce5e-38c6-44ab-8f5a-1b5153...	2025-12-01 05:28:36+00	40	{}	2025-12-01 05:28:38.194915+00
730	5f3e40f3-7a24-4df2-8225-6b249...	2025-12-01 05:28:36+00	26	{}	2025-12-01 05:28:38.194915+00
731	9204a062-b099-4022-8171-b12f14...	2025-12-01 05:30:49+00	12	{}	2025-12-01 05:30:52.083412+0(
732	6a0689c8-4328-43e5-865e-c0cd...	2025-12-01 05:31:50+00	115	{}	2025-12-01 05:31:50.873881+00
733	e09141e1-aee2-4ef1-8e35-52500c...	2025-12-01 05:33:05+00	68	{}	2025-12-01 05:33:10.119665+00
734	61a4ce5e-38c6-44ab-8f5a-1b5153...	2025-12-01 05:33:36+00	40	{}	2025-12-01 05:33:38.696463+0
735	5f3e40f3-7a24-4df2-8225-6b249...	2025-12-01 05:33:36+00	26	{}	2025-12-01 05:33:38.696463+0
736	9204a062-b099-4022-8171-b12f14...	2025-12-01 05:35:49+00	11	{}	2025-12-01 05:35:50.192491+00
737	6a0689c8-4328-43e5-865e-c0cd...	2025-12-01 05:36:50+00	116	{}	2025-12-01 05:36:54.965842+0
738	e09141e1-aee2-4ef1-8e35-52500c...	2025-12-01 05:38:05+00	69	{}	2025-12-01 05:38:05.860083+0
739	61a4ce5e-38c6-44ab-8f5a-1b5153...	2025-12-01 05:38:36+00	40	{}	2025-12-01 05:38:40.385296+0
740	5f3e40f3-7a24-4df2-8225-6b249...	2025-12-01 05:38:36+00	26	{}	2025-12-01 05:38:40.385296+0

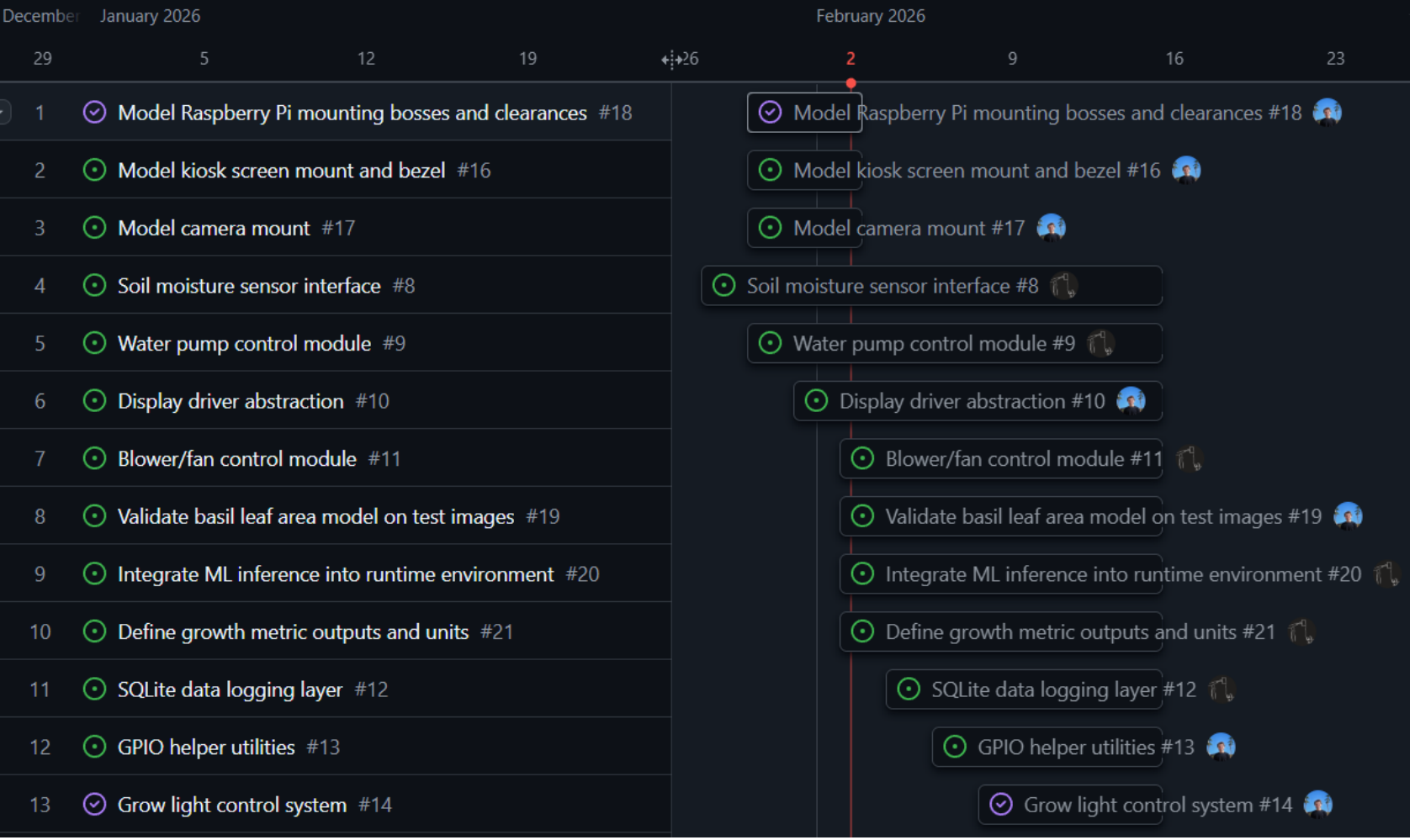

Timeline (Github)

Next Steps

- Refine web/mobile/kiosk app to improve UX
- Implement alerts system to receive notifications in app
- Implement watering system
- Refine stress relief and enclosure prints

Conclusion

1. We identified user needs across beginners, gardeners, and technical users.
2. Translated those needs into clear functional and non-functional requirements, applying engineering standards to each.
3. Reviewed the enclosure concept, system architecture, and key design specs, validating feasibility.
4. Partial prototype constructed using modular, rapid, CI/CD prototyping techniques.
5. Outlined next steps in prototype construction and user experience.

Citations

International Organization for Standardization. (2011). *ISO/IEC 25010:2011 systems and software engineering — Systems and software quality requirements and evaluation (SQuaRE) — System and software quality models*. https://www.iso.org/standard/78175.html.

International Organization for Standardization. (2022). *ISO/IEC 27001:2022 information security, cybersecurity and privacy protection — Information security management systems — Requirements*. https://www.iso.org/standard/82875.html

Institute of Electrical and Electronics Engineers. (2024). *IEEE 7009-2024: Standard for fail-safe design of artificial intelligence systems*. https://standards.ieee.org/

Institute of Electrical and Electronics Engineers. (2016). *IEEE 1012-2016: Standard for system, software, and hardware verification and validation*. https://standards.ieee.org/

Institute of Electrical and Electronics Engineers. (2019). *IEEE 2413-2019: Standard for an architectural framework for the Internet of Things (IoT)*. https://standards.ieee.org/

Questions?