# NOMAN ASHRAF PORTFOLIO

## M.SC ELECTRICAL ENGINEERING

## MAJORS POWER ELECTRONICS

Supervisor: Professor Woojin Choi

신재생에너지변환연구실

# LAST JOB EXPERIENCE AT

# 신재생에너지변환연구실

# HYBRID AC/DC GRID CONNECTED SYSTEM

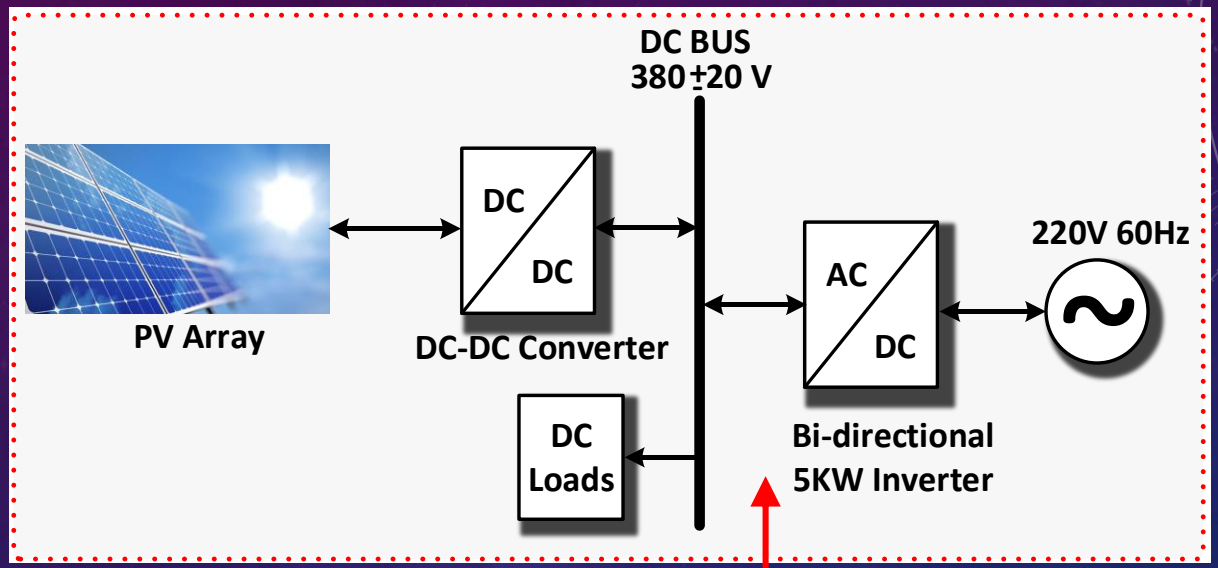


- **My Responsibilities:**

- Complete hardware including schematic and layout PCB design of 5kW Inverter
- Software algorithm design for control of inverter implementation on Digital Signal Processor TMS320F28335F
- Testing and Debugging of whole system with PV Array.

# HYBRID AC/DC GRID CONNECTED SYSTEM

- Experimental setup of the 5kw grid connected system
- Circuit prototype of the 5kW Inverter
- PCB Layout

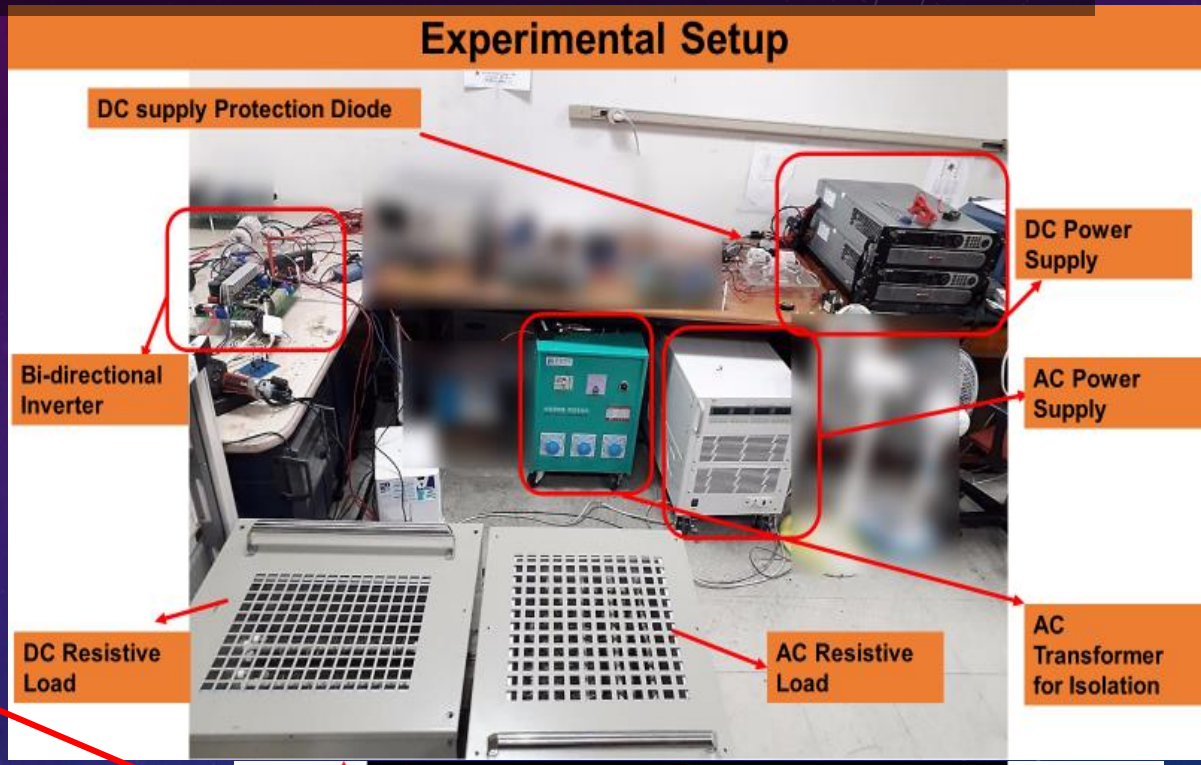


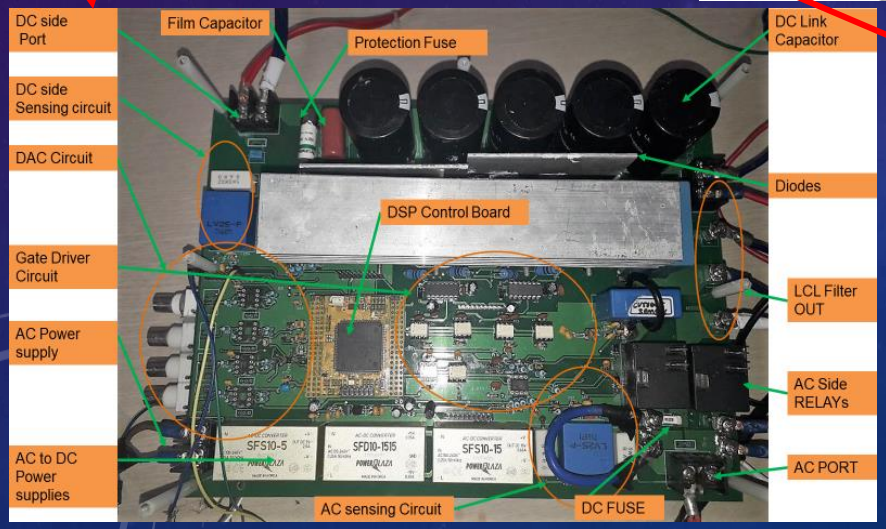


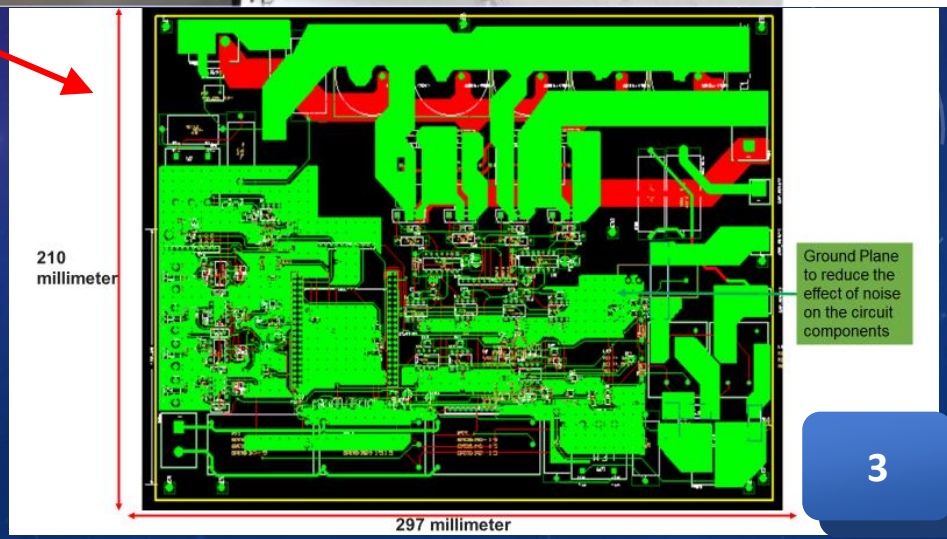

# RESULTS

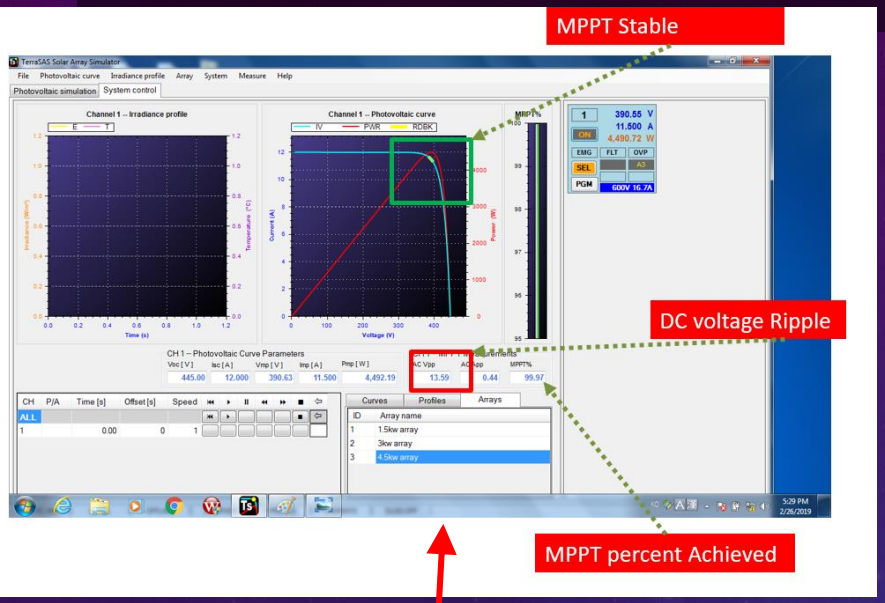


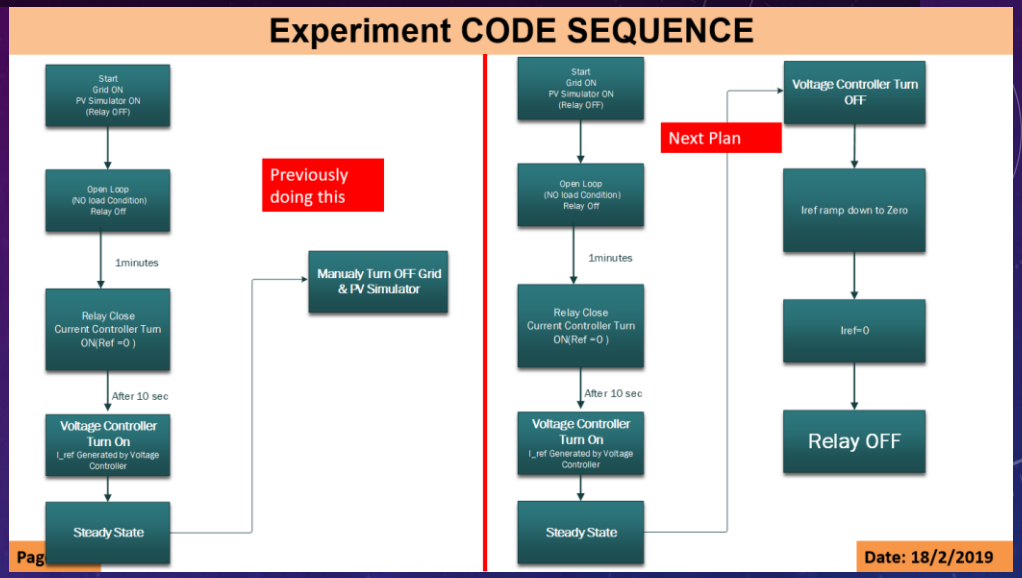


- **100% MPPT of PV Array Achieved**

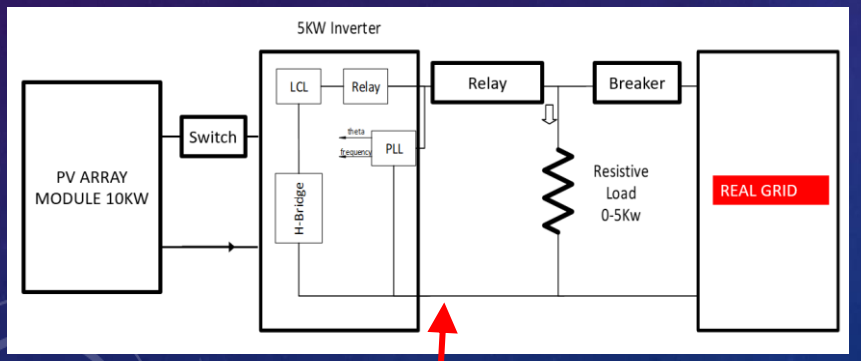


- **Experimental Setup**

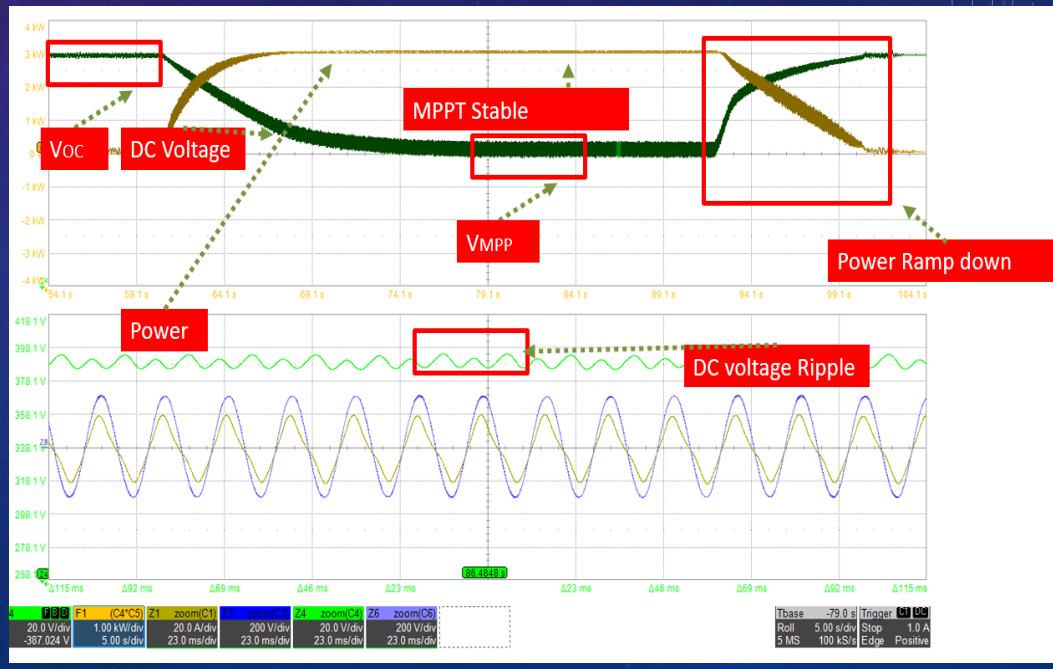

# RESULTS

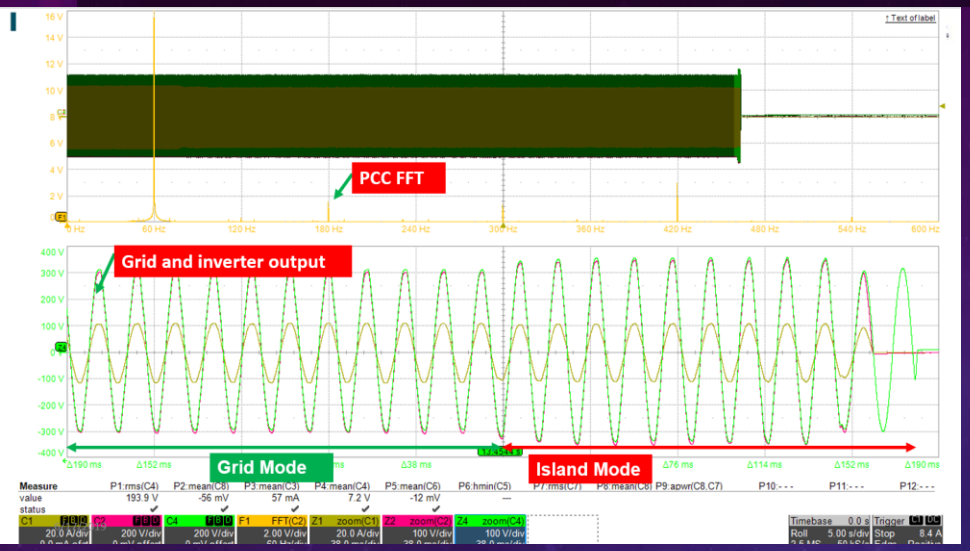


- Islanding Detection Experiment

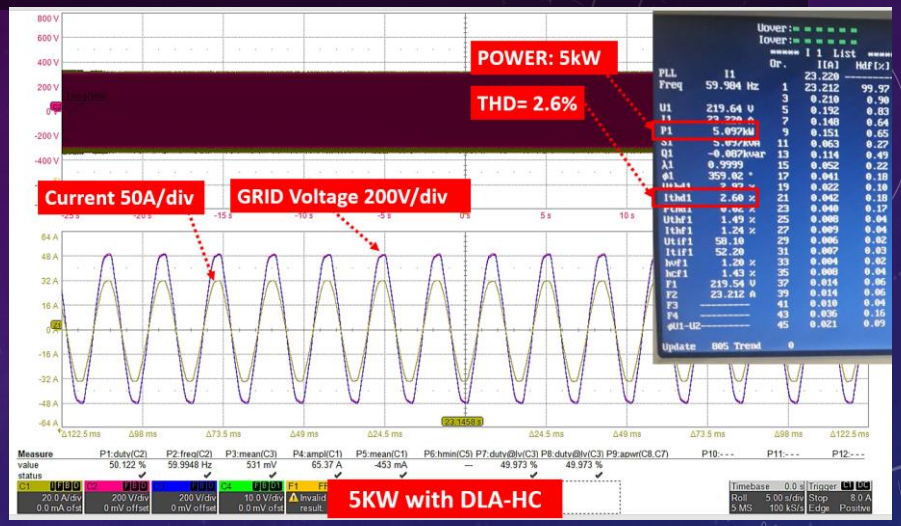


- Harmonic Compensation

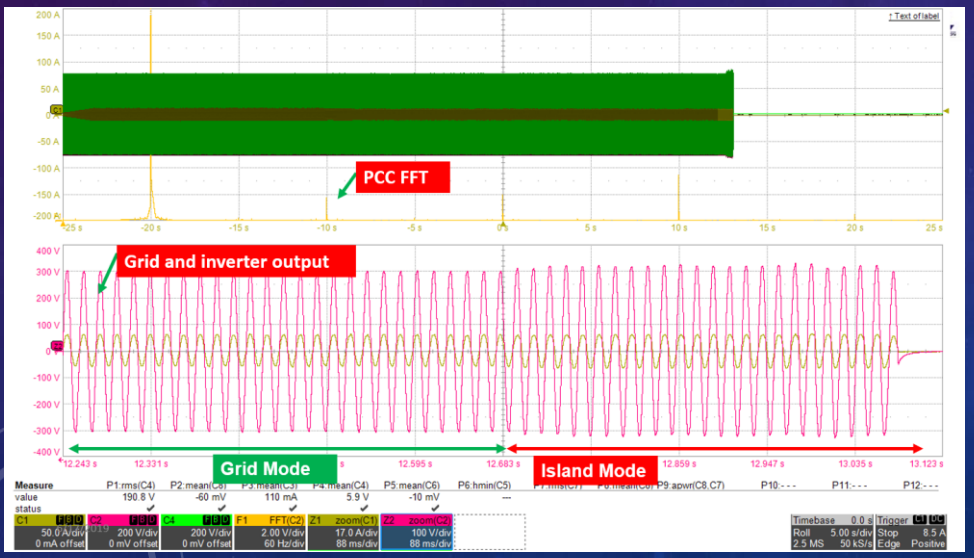


- Islanding Detection Experiment

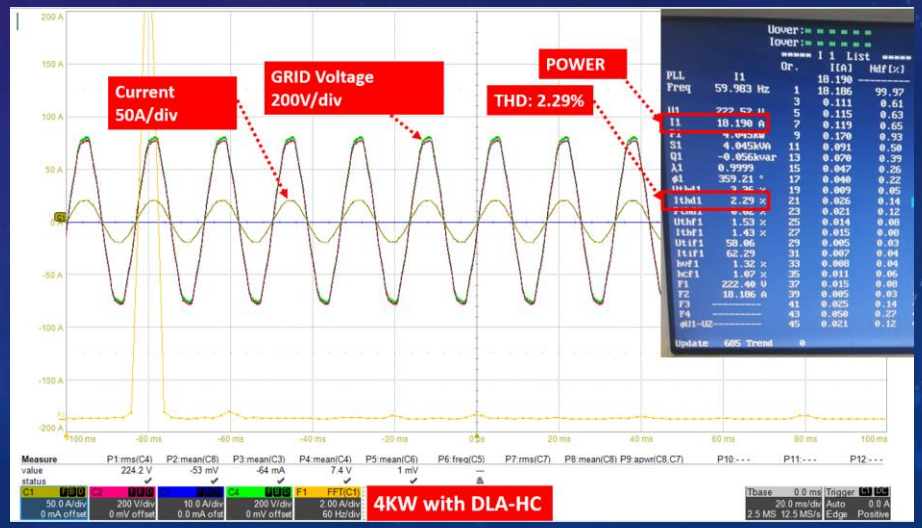


- Harmonic Compensation

# RESULTS

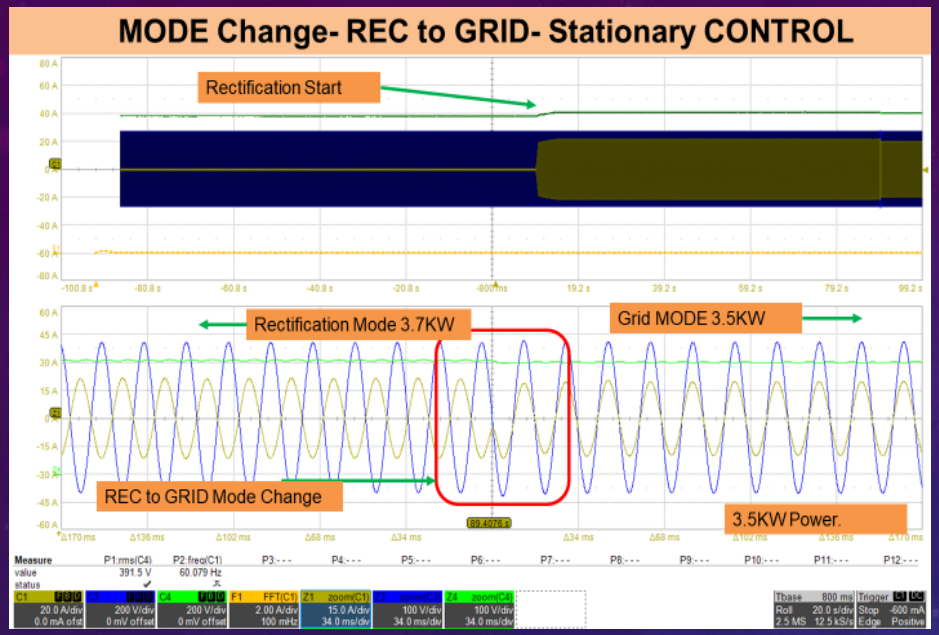


- Bidirectional Mode Change

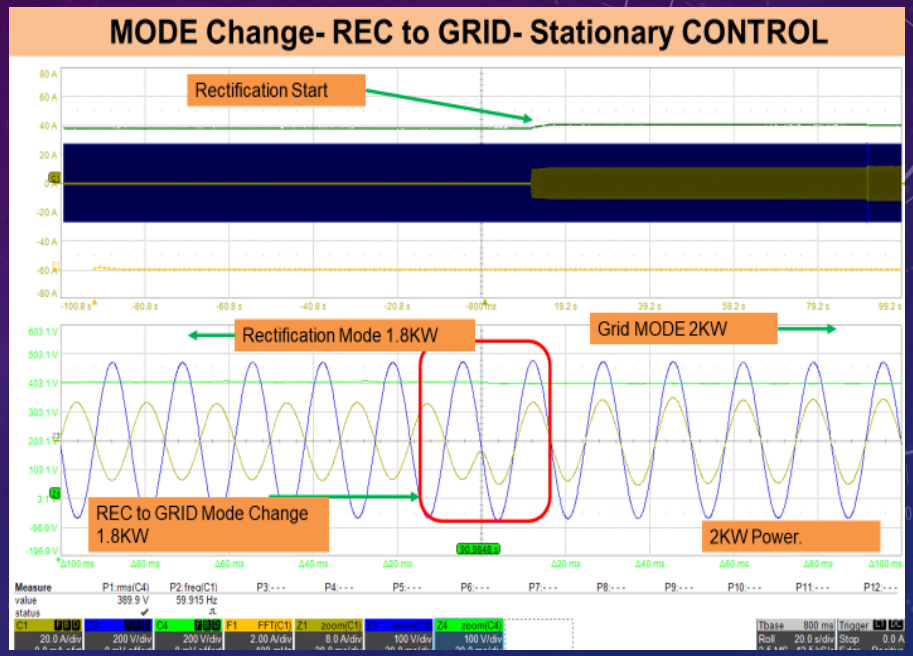


- Bidirectional Mode Change

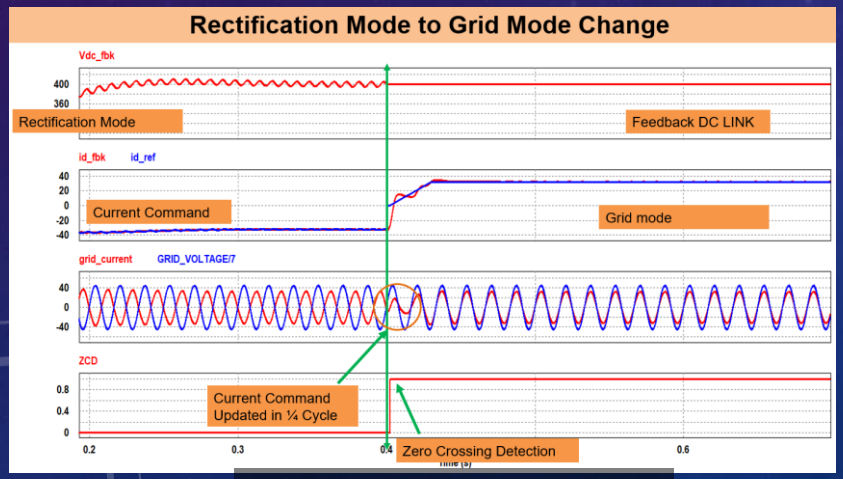


- PSIM Simulation

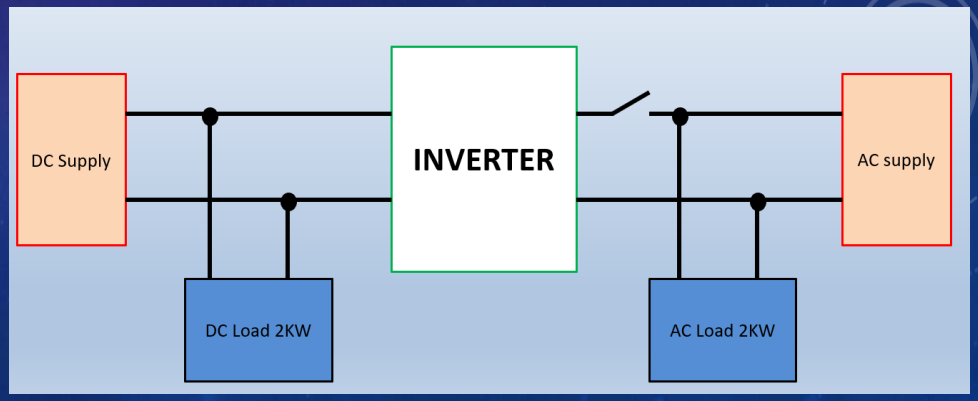


- Experimental Setup for Mode Change

# RESULTS

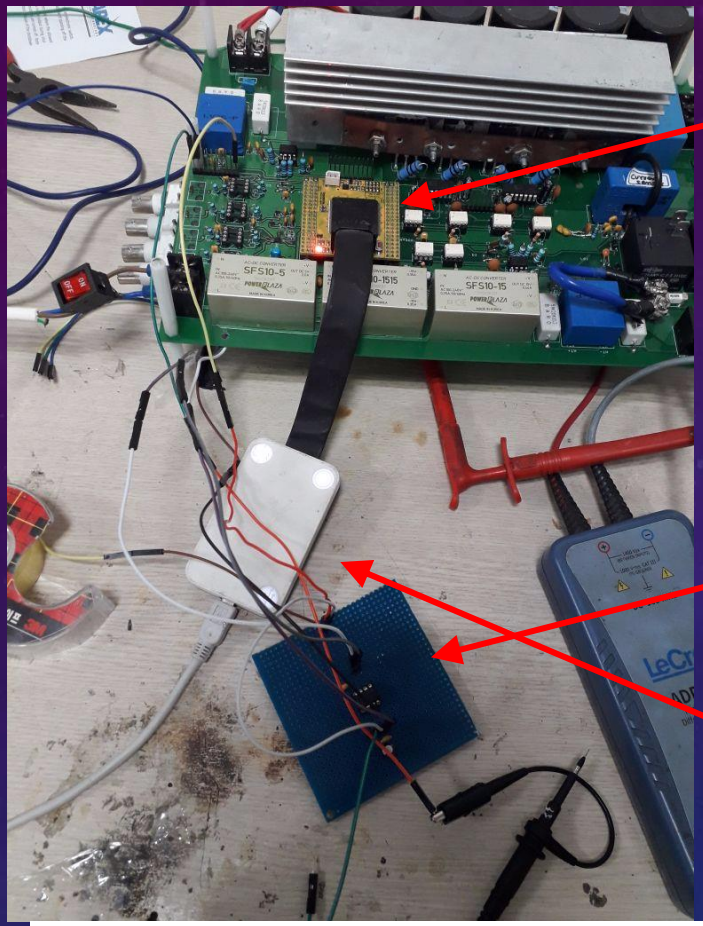

- Digital Signal Processor TMS320F28335
- Communication Code written in C++, Code Composer
- Self Designed DAC circuit

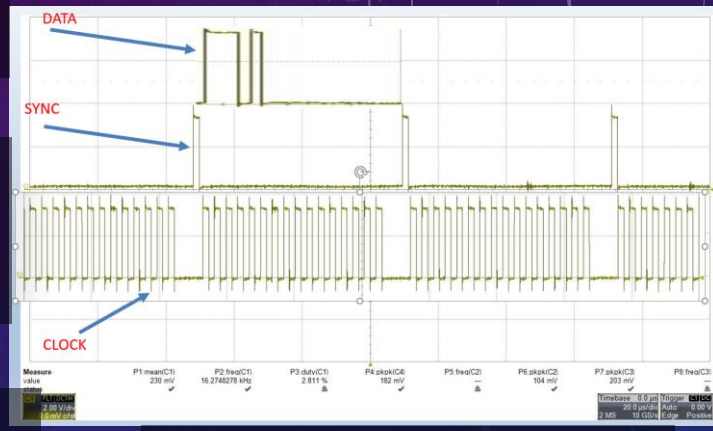


- Serial Communication

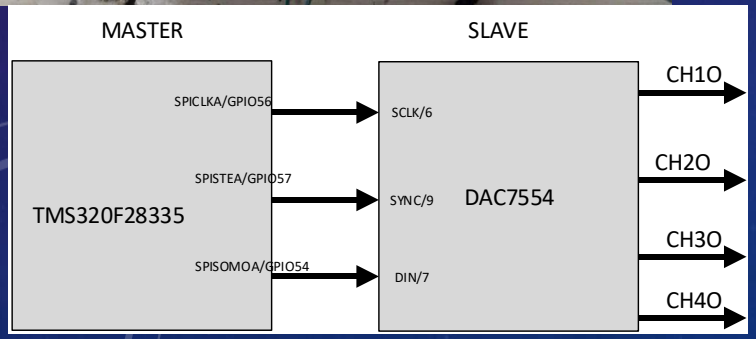


- 4 Channel Output produced by the DAC Circuit