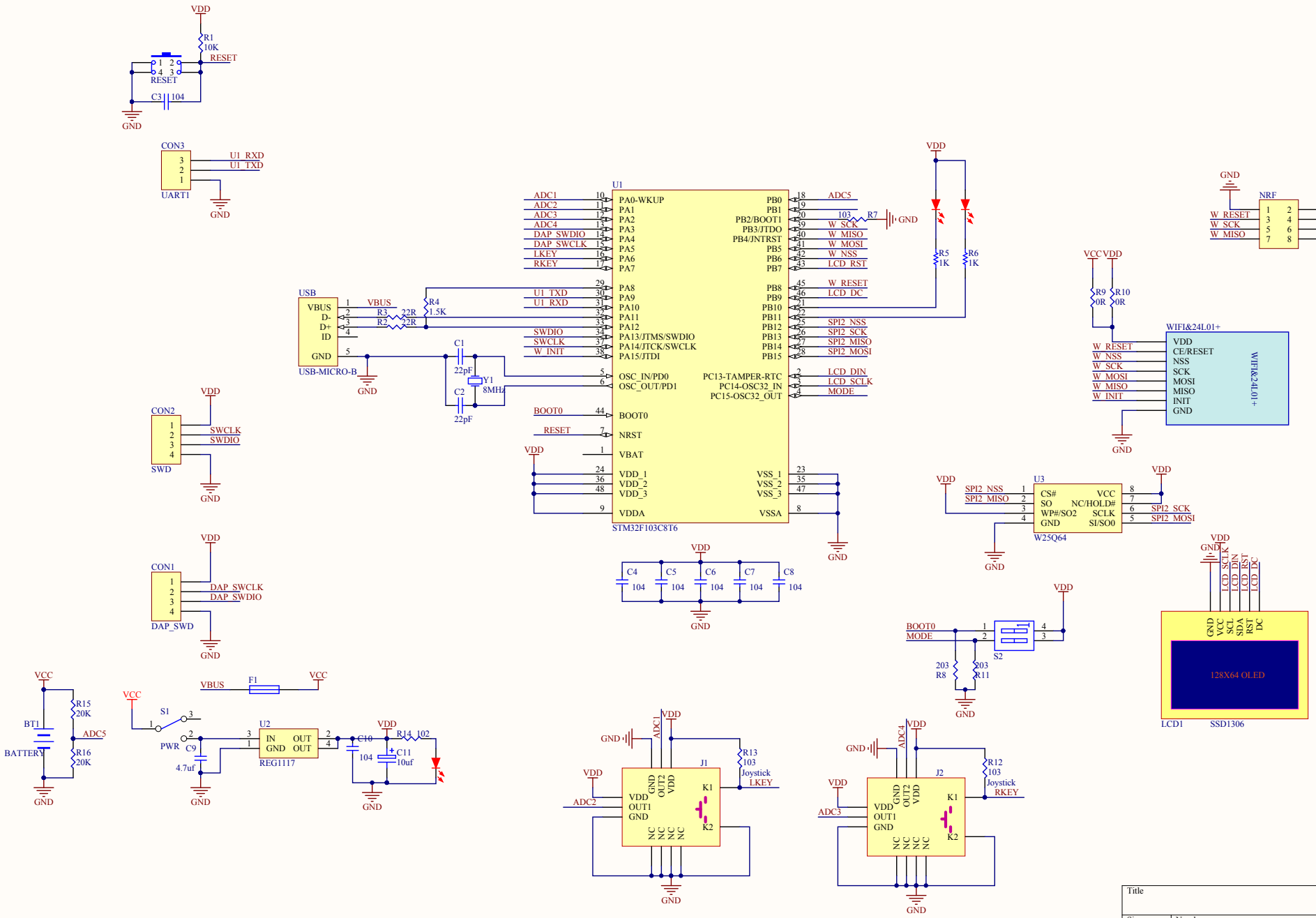

Title		
Size A3	Number	Revision
Date: 2014/1/11	Sheet of	
File: F:\MiniQuadcopter\..\MiniControl.SchDoc	Drawn By:	