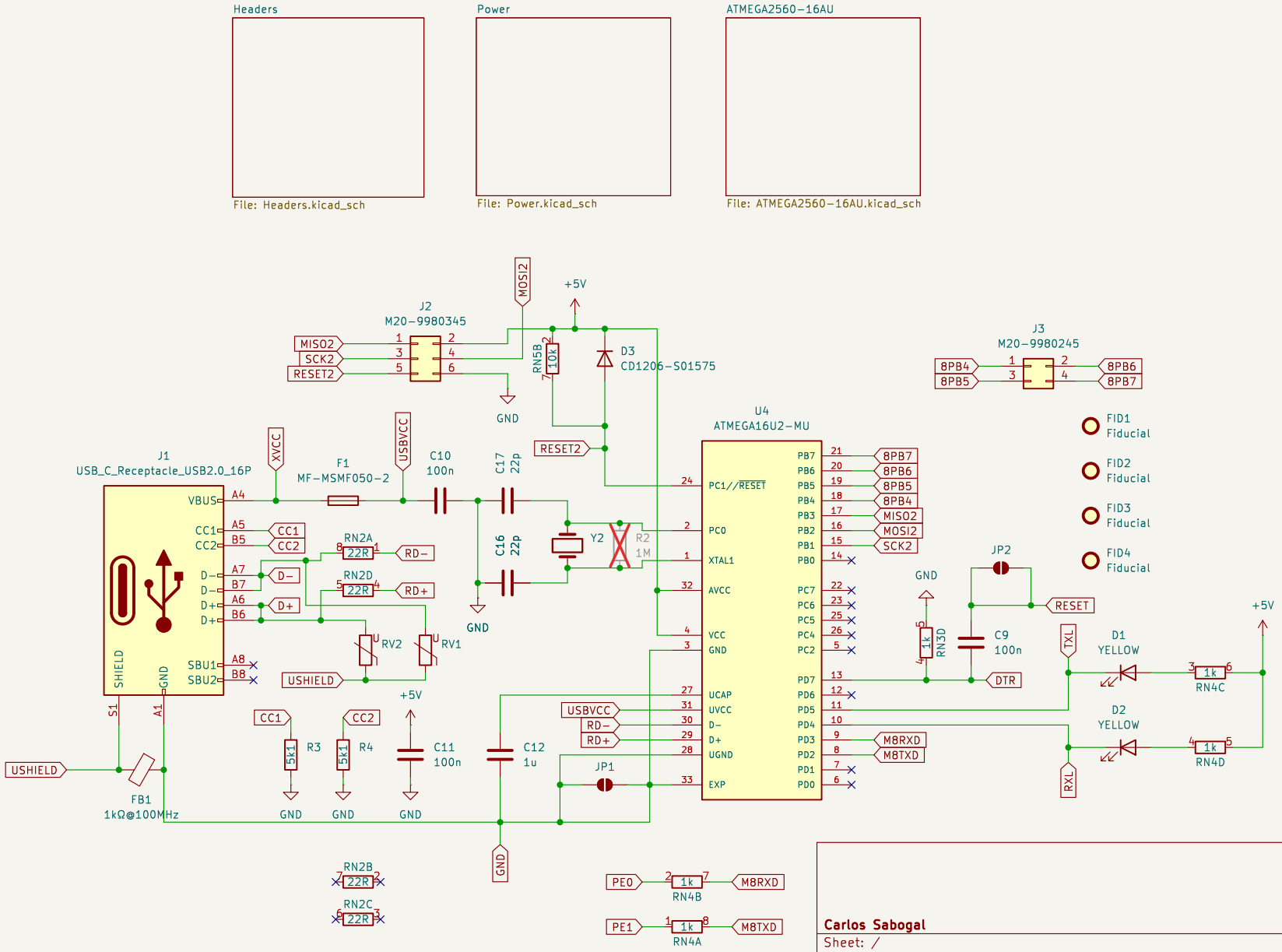

Carlos Sabogal

Sheet: /

File: Arduino Mega 2560.kicad_sch

Title: Arduino Mega 2560

Size: A4	Date: 2024-05-31	**Rev: 1**
KiCad E.D.A. 9.0.8		Id: 1/4

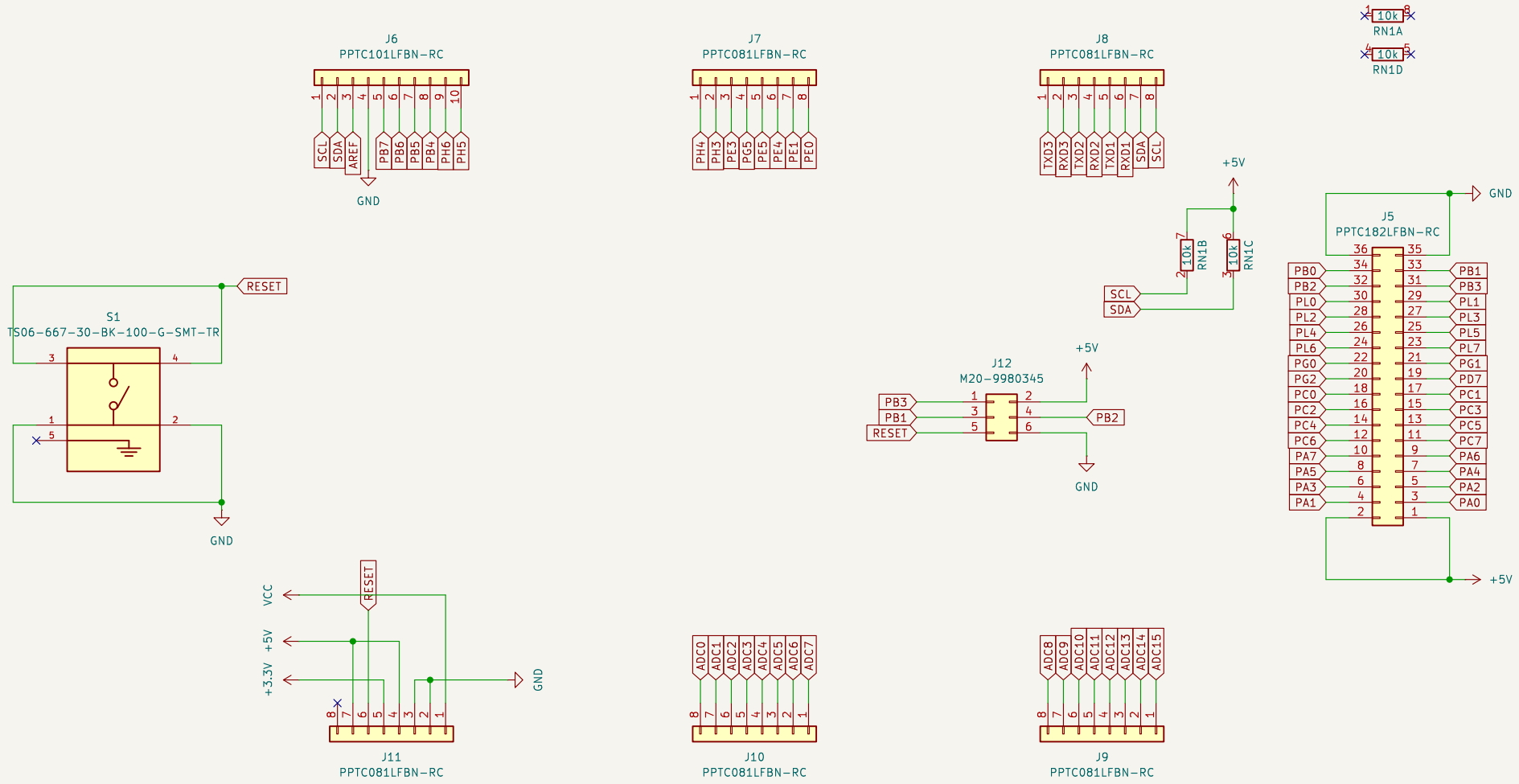

Carlos Sabogal

Sheet: /Headers/
File: Headers.kicad_sch

Title: Arduino Mega 2560 Headers

Size: A4	Date: 2024-05-31	**Rev: 1**
KiCad E.D.A. 9.0.8		Id: 2/4

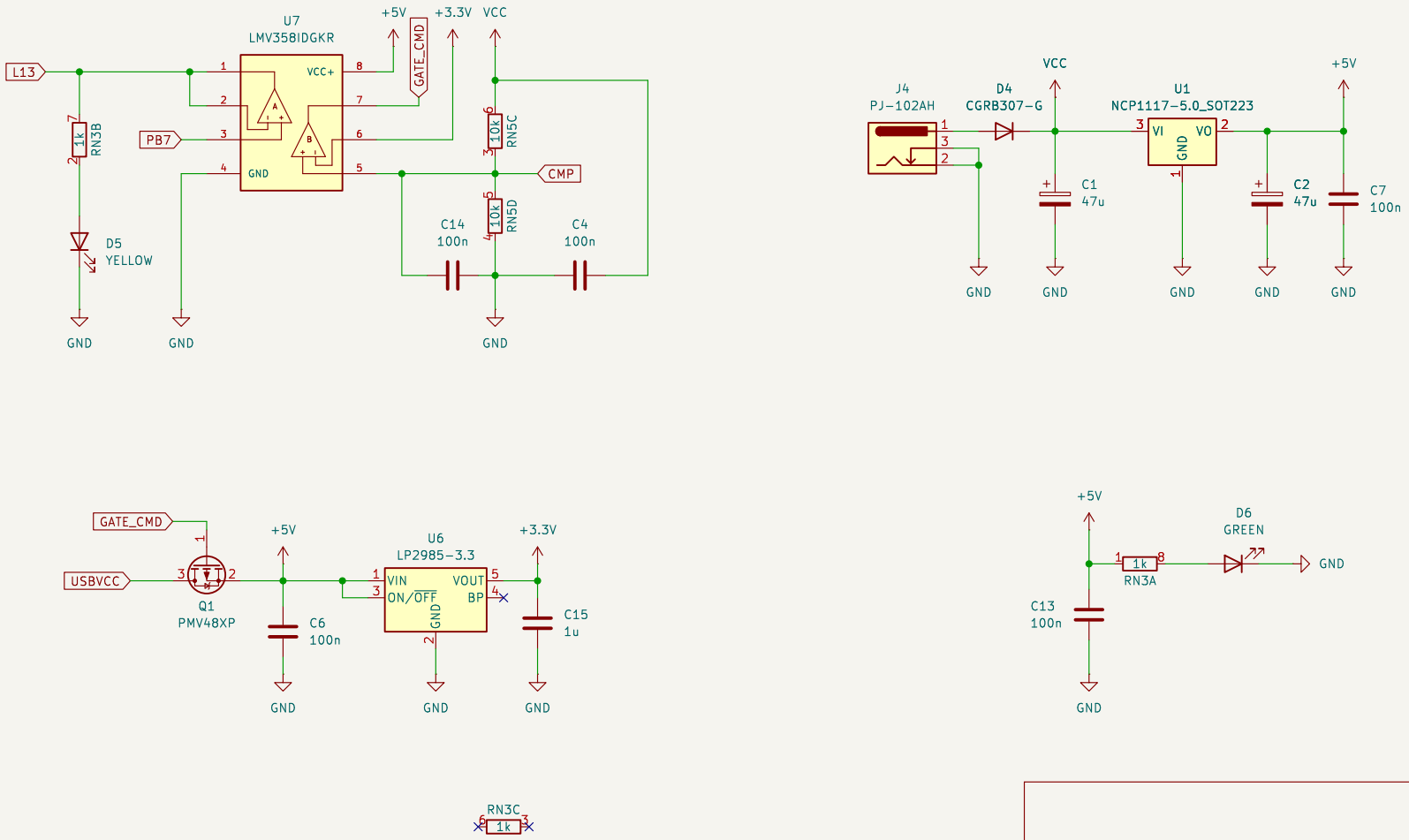

Carlos Sabogal

Sheet: /Power/
File: Power.kicad_sch

Title: Arduino Mega 2560 Power

Size: A4	Date: 2024-05-31	**Rev: 1**
KiCad E.D.A. 9.0.8		Id: 3/4

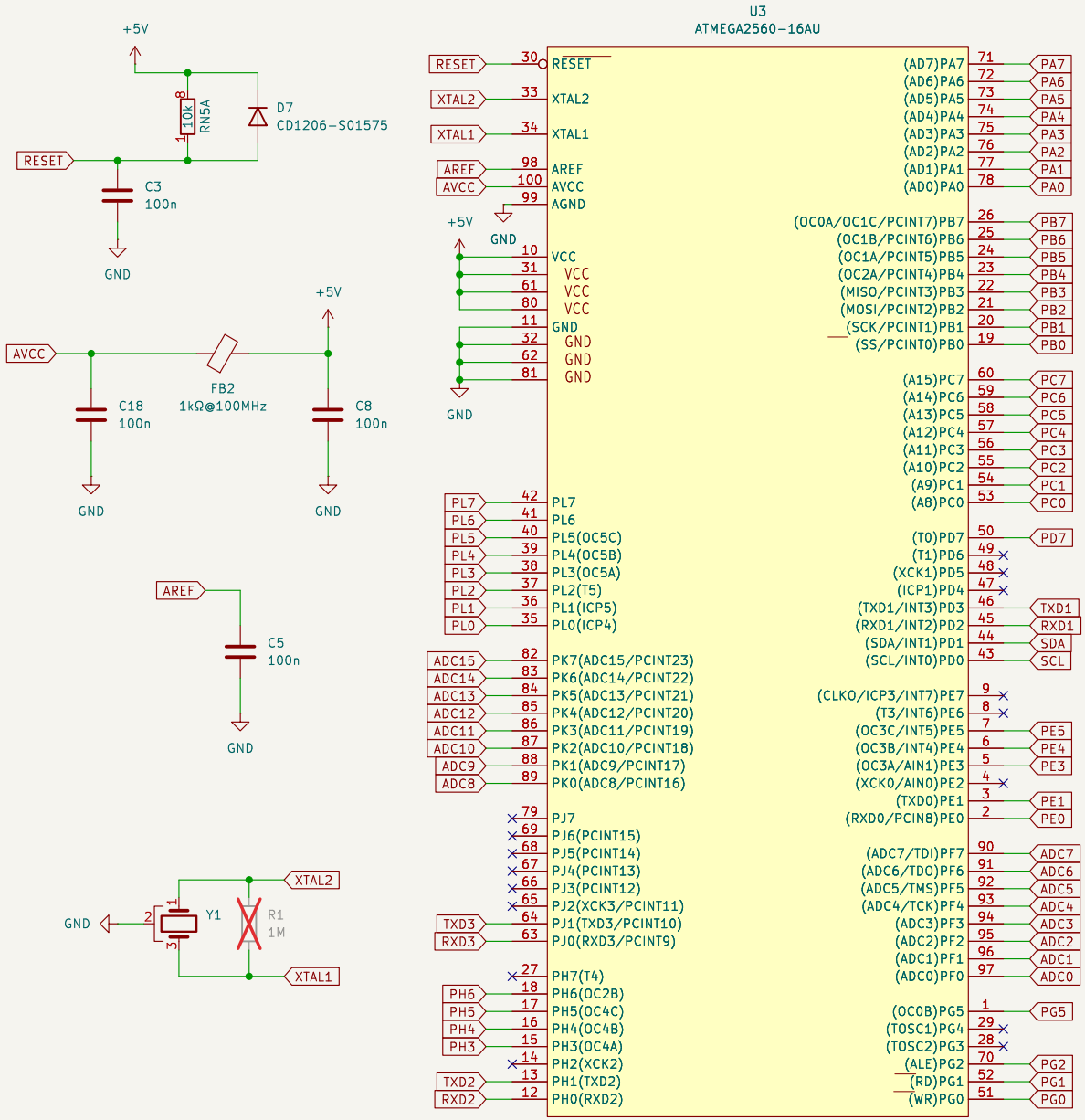

Carlos Sabogal

Sheet: /ATMEGA2560-16AU/
File: ATMEGA2560-16AU.kicad_sch

Title: Arduino Mega 2560 ATMEGA2560-16AU

Size: A4	Date: 2024-05-31	**Rev: 1**
KiCad E.D.A. 9.0.8		Id: 4/4