IC PROJECT

FLIP FLOPS

Instructor: Dr. Mohammed Khader

OUR TEAM

1. Wafaa Shaheen
2. Noor Nasir
3. Yousef Qawwas

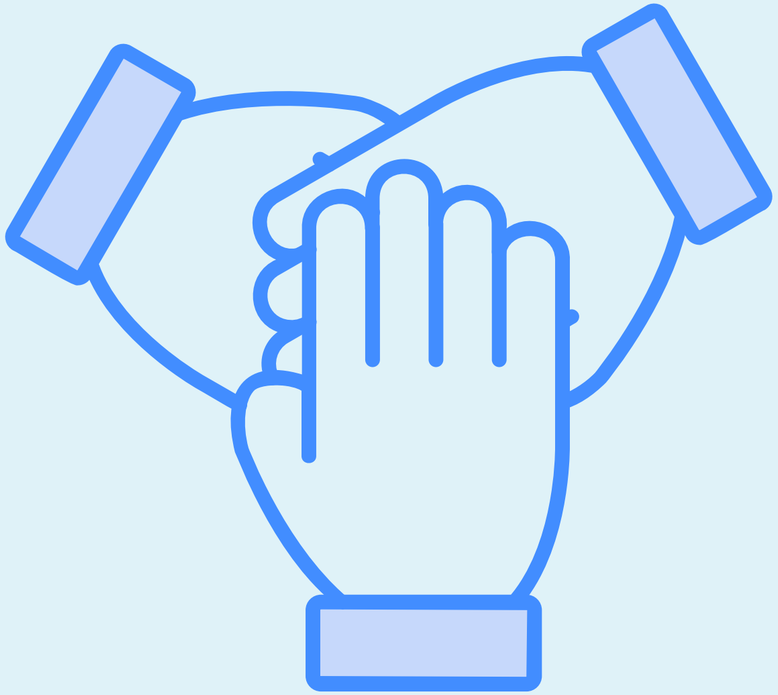

INTRODUCTION

This project focuses on the design and simulation of a custom Integrated Circuit (IC) using GDI.
The objective is to apply VLSI design principles to build a functional digital circuit and validate its behaviour through simulation.
Tools used: Electric VLSI, LTspice
Key tasks include:
Schematic design
Transistor sizing
Layout creation
Functional and transient simulation

TECHNOLOGY

In this project, we implemented both CMOS and GDI-based D flip-flops using the 16 nm technology process, which reflects modern, highly scaled digital circuit fabrication. The schematics and layouts were designed using the Electric VLSI Design System, a tool that allowed us to build, simulate, and extract layouts at the transistor level. This technology choice emphasizes low power consumption, reduced area, and performance optimization — all essential in advanced integrated circuit design.

GOALS

- Design a D flip-flop using both CMOS and GDI logic styles.
- Implement transistor-level schematics and layouts for both designs using Electric/VLSI tools.
- Simulate both designs to verify correct functional behavior and timing performance.
- Measure key parameters such as propagation delay, rise/fall time, average power, and energy consumption.
- Compare the CMOS and GDI implementations in terms of power efficiency, area, and transistor count.
- Evaluate which design is more suitable for low-power digital systems.

DELAY

Delay is the time a signal takes to travel from input to output. It depends on factors like transistor size and load capacitance. Lower delay improves circuit speed and performance.

POWER

Power in digital circuits refers to the energy consumed during operation. It includes dynamic power (from switching activity) and static power (from leakage). Reducing power is key for energy-efficient and portable designs.

D FLIP FLOP

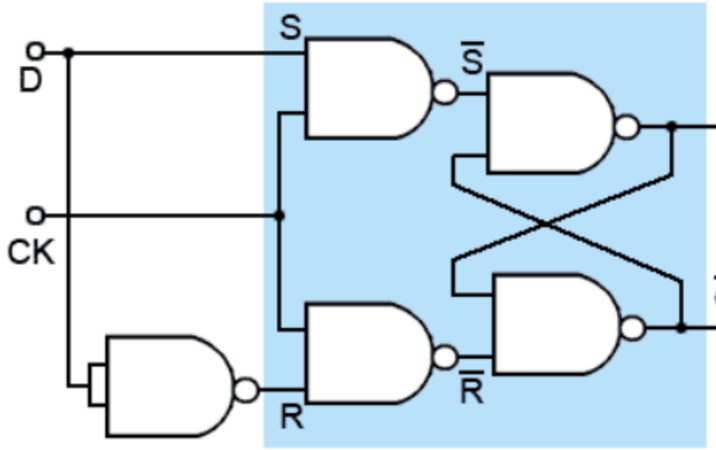

Inputs		Outputs	
CK	D	Q	$\overline{Q}$
0	X	No change	
1	0	0	1
1	1	1	0

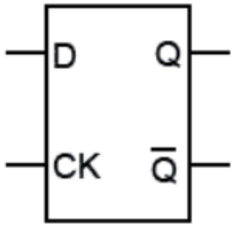

A D flip-flop is a digital memory element that captures the value of the input D on the rising edge of the clock and holds it at the output Q until the next clock edge. It's widely used in registers, counters, and timing circuits.

This diagram shows the internal logic of a D flip-flop built using NAND gates and an SR latch. It captures the input D on the rising edge of the clock and outputs it at Q, while the truth table illustrates how the output changes based on clock and data inputs.

SLAVE D LATCH

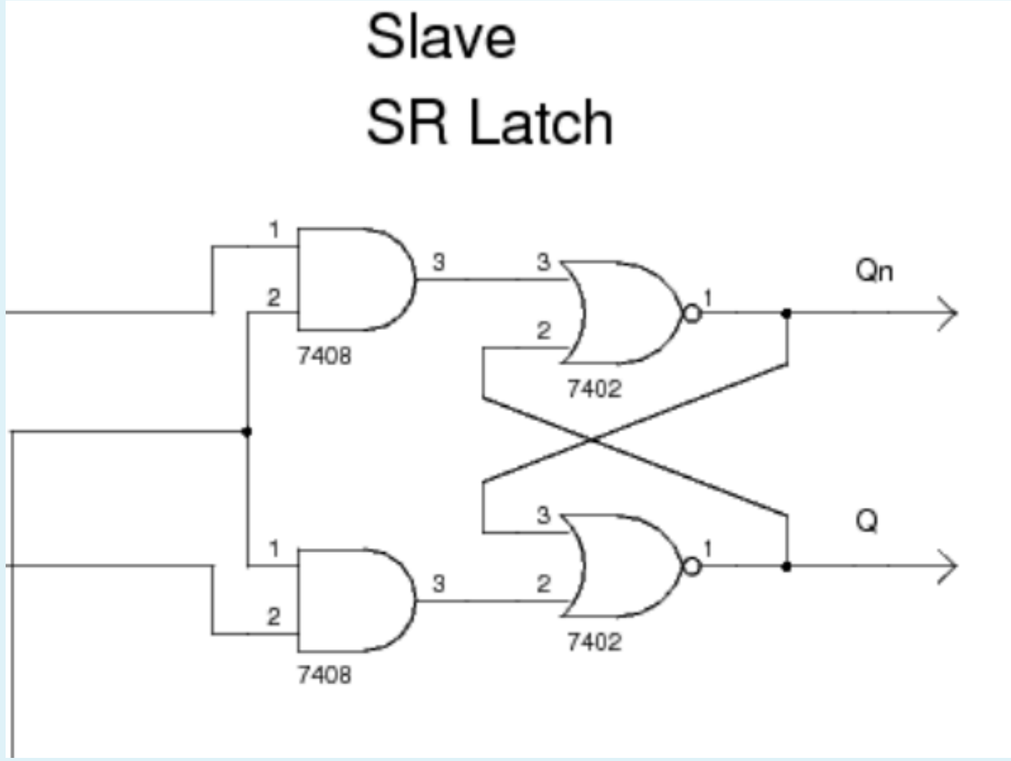

A slave latch is the second stage in a master-slave configuration, commonly used in edge-triggered flip-flops. It captures the output of the master latch when the clock signal transitions, typically on the falling edge, ensuring synchronized and stable data transfer in sequential circuits.

MASTER D-LATCH

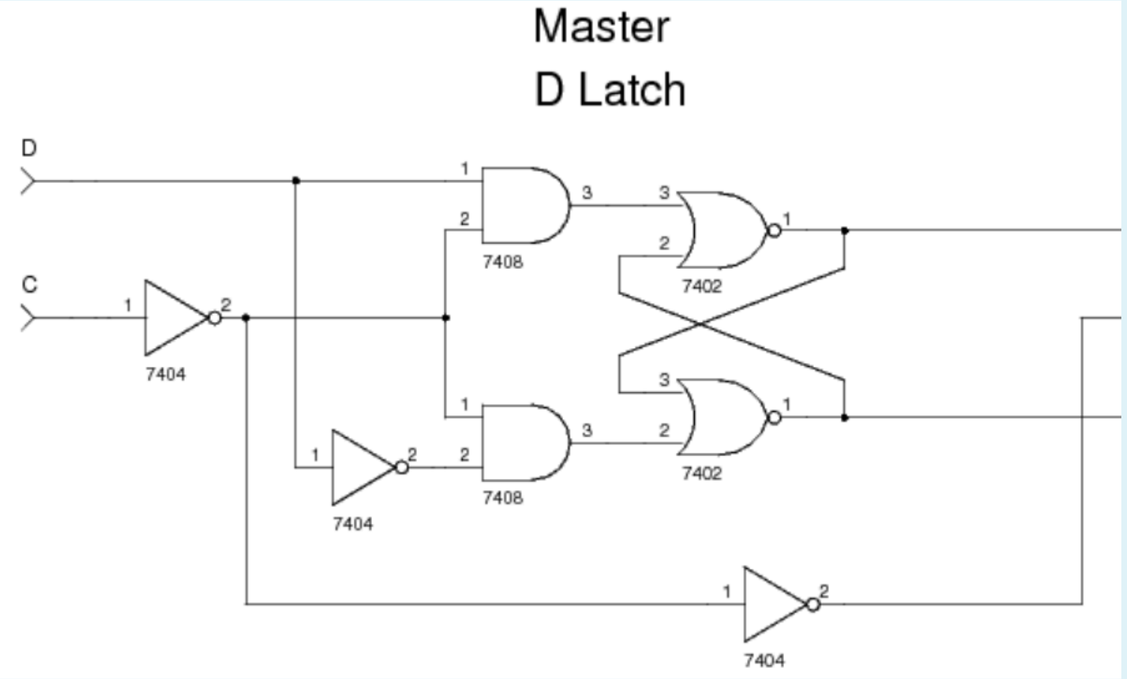

A D latch is a basic memory element that stores one bit of data. It captures the input (D) when the enable signal (EN) is active and holds the value when the enable is off. It is commonly used in sequential circuits for temporary data storage and synchronization.

CMOS D FLIP FLOP

The CMOS-based D flip-flop is implemented using complementary pairs of PMOS and NMOS transistors to form logic gates like inverters and transmission gates. This design ensures full voltage swing, high noise immunity, and reliable switching behavior. Although it consumes more area and power due to higher transistor count, it offers strong performance and stability in digital circuits.

This schematic shows a CMOS-based D flip-flop built using transmission gates and inverters. It uses complementary PMOS and NMOS transistors controlled by the clock to ensure stable data transfer and storage.

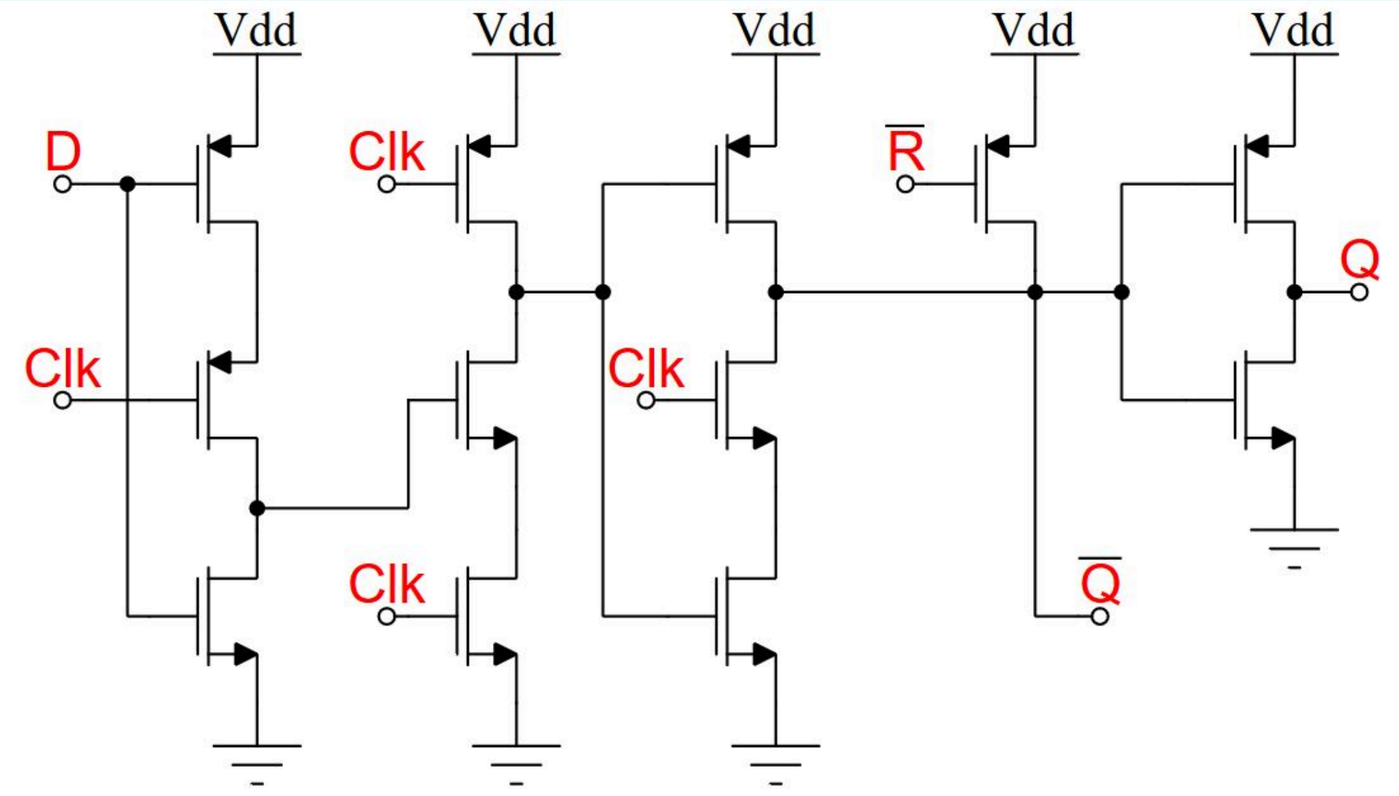

CMOS SCHEMATIC

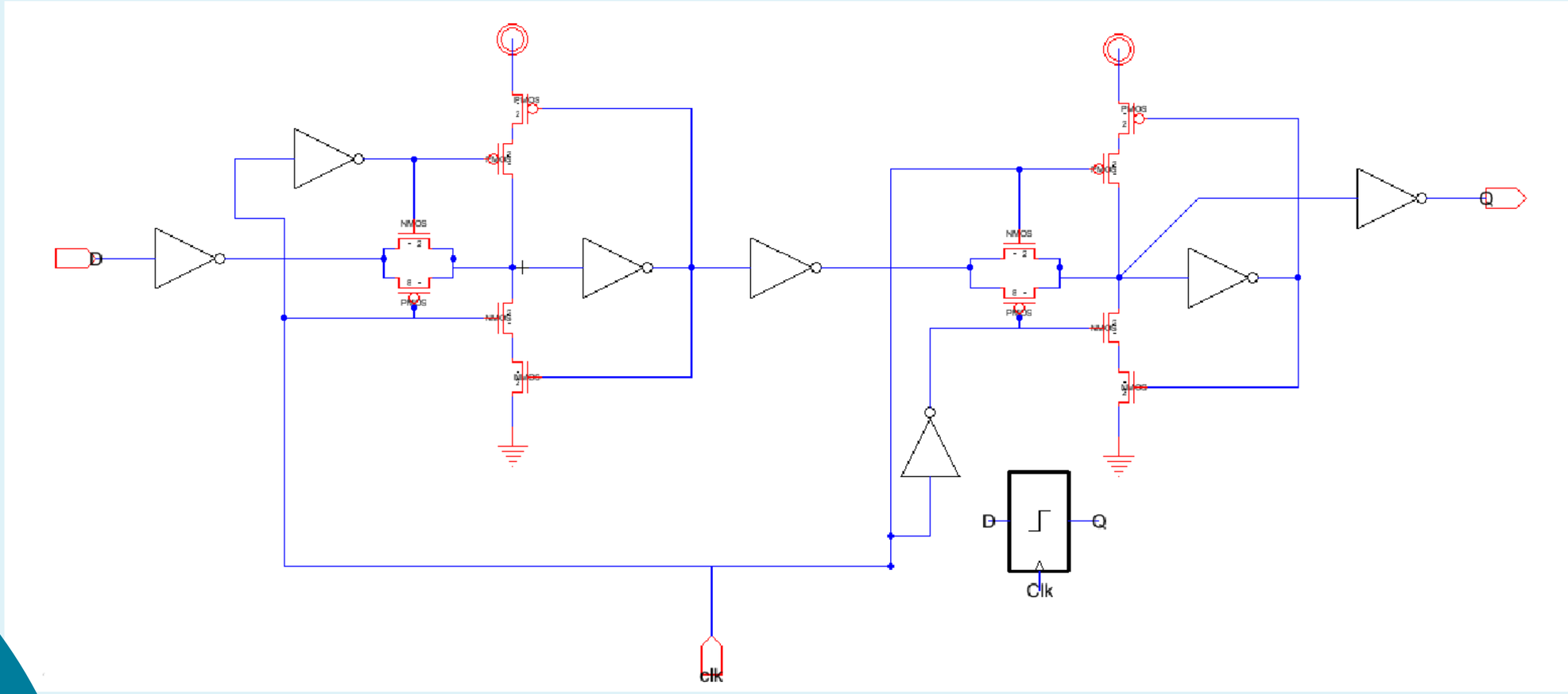

CMOS SIMULATION

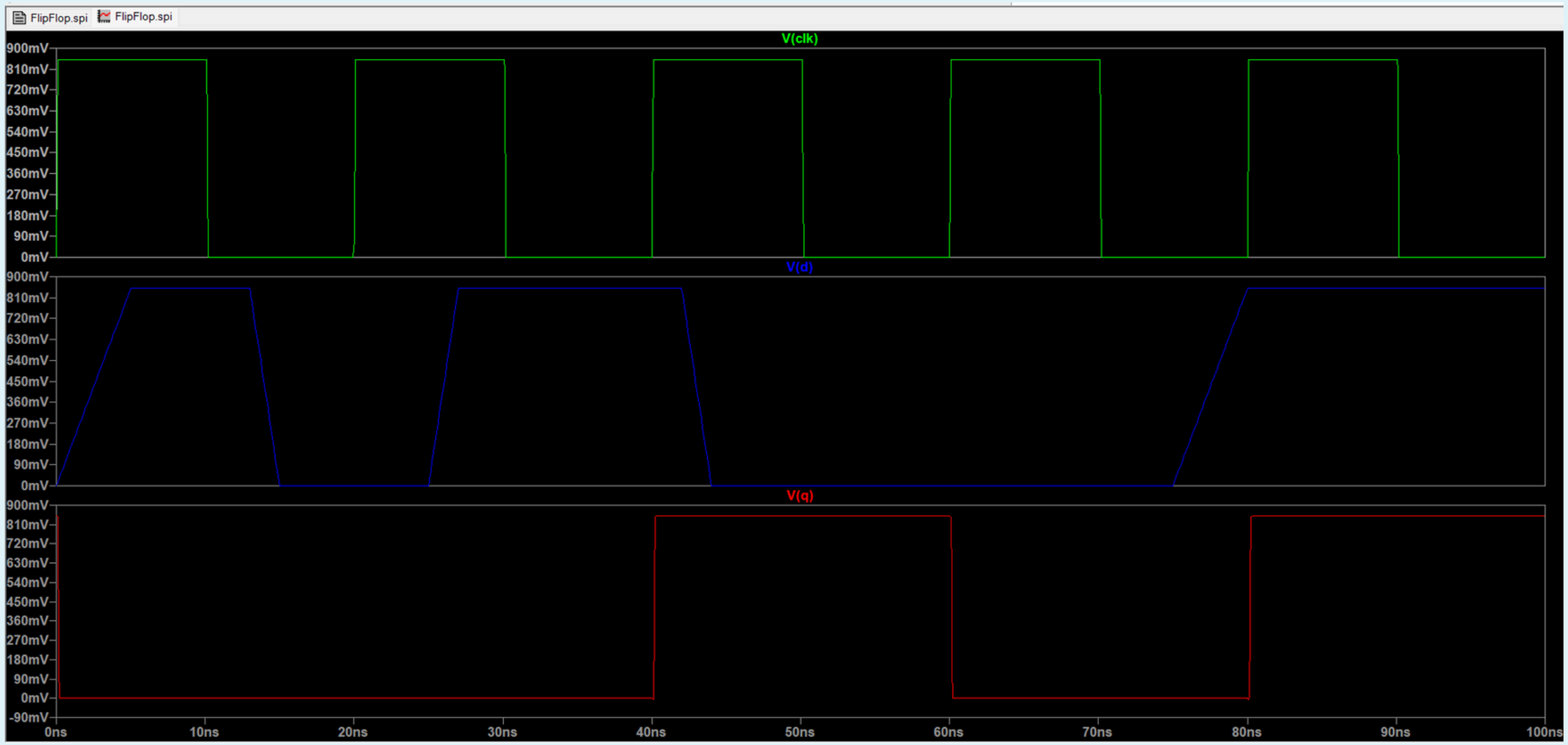

CMOS LAYOUT

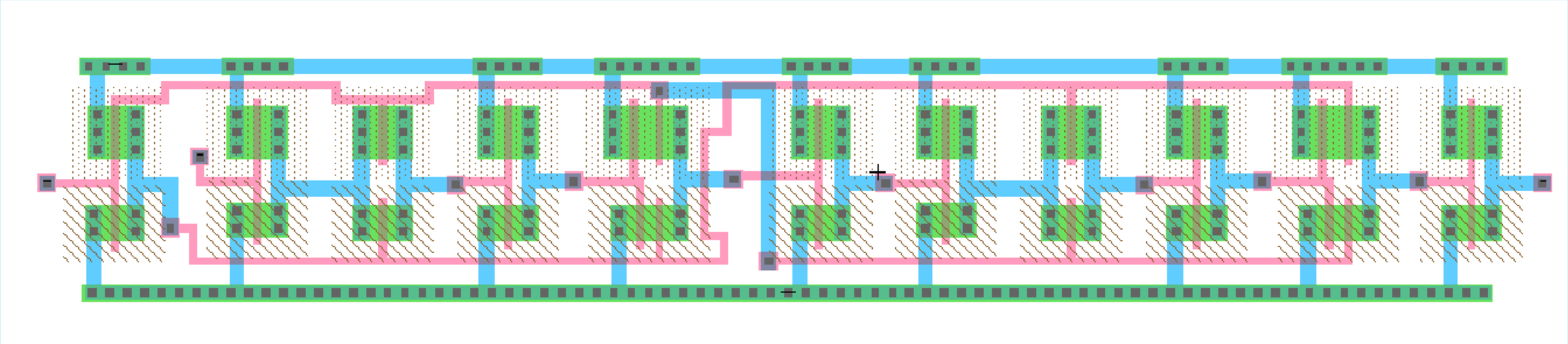

CMOS LAYOUT SCHEMATIC

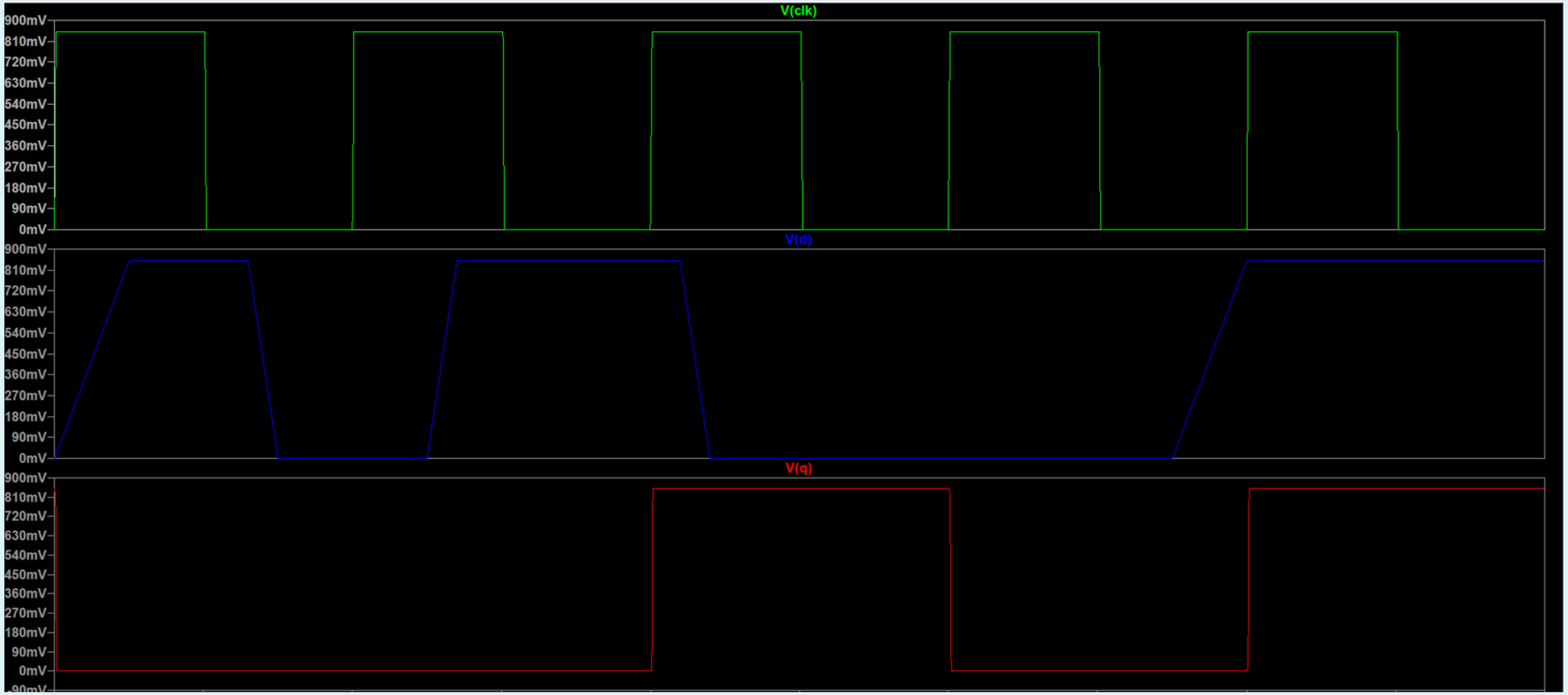

CMOS RESULTS

SPICE Error Log: C:\Users\Lenovo\Downloads\FlipFlop.log

```
td=4.01253e-008 FROM 4.11765e-011 TO 4.01665e-008
trise=6.88443e-011 FROM 4.0129e-008 TO 4.01979e-008
tfall=5.65227e-011 FROM 1.26877e-010 TO 1.834e-010
idd_avg: AVG(i(vdd))=-4.44066e-007 FROM 0 TO 1e-007
vdd_avg: AVG(v(vdd))=0.85 FROM 0 TO 1e-007
energy: INTEG(i(vdd)*v(vdd))=-3.77456e-014 FROM 0 TO 1e-007


Date: Sun Jun 15 22:13:14 2025
Total elapsed time: 0.358 seconds.

tnom = 27
temp = 27
method = modified trap
totiter = 3869
traniter = 3454
tranpoints = 1194
accept = 1162
rejected = 32
matrix size = 123
fillins = 4
solver = Normal
Thread vector: 30.0/14.8[2] 4.8/2.6[2] 2.1/0.9[2] 0.4/2.8[1]  2592/500
Matrix Compiler1: 17.85 KB object code size  2.9/1.6/[0.6]
Matrix Compiler2: 15.49 KB object code size  1.8/1.5/[0.6]
```

Power= I*V = 377.46 nano Watt

GDI

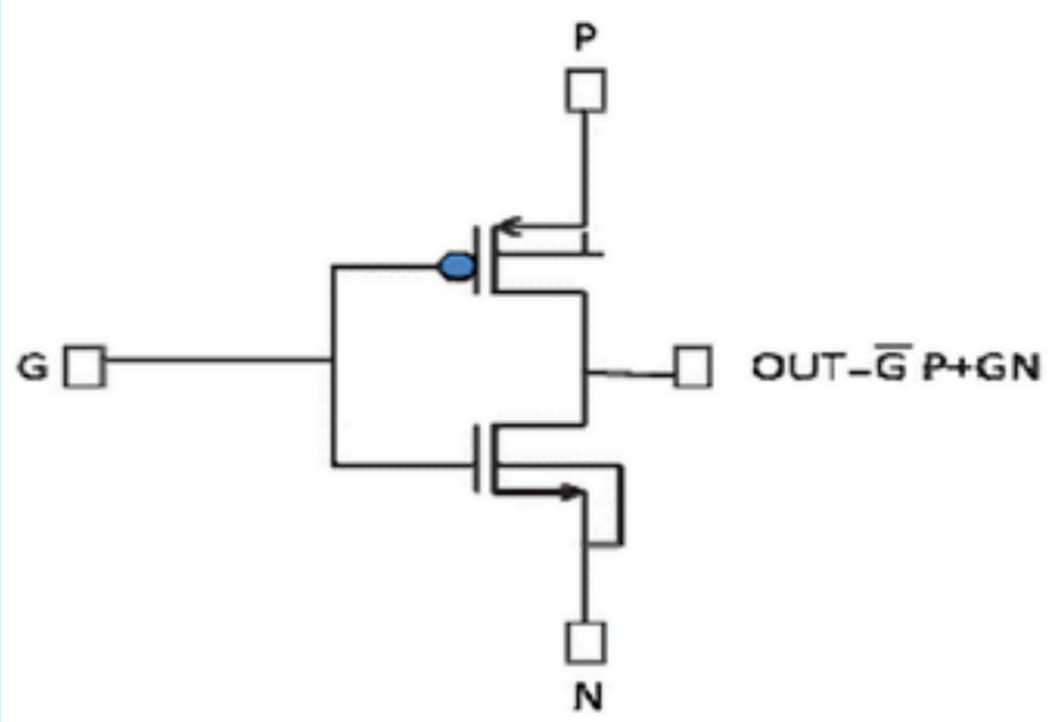

Gate Diffusion Input (GDI) is a low-power design technique that uses fewer transistors than CMOS by applying inputs to both gates and diffusion terminals. It allows efficient logic gate design with reduced area, delay, and power consumption.

GDI D-FLIP FLOP

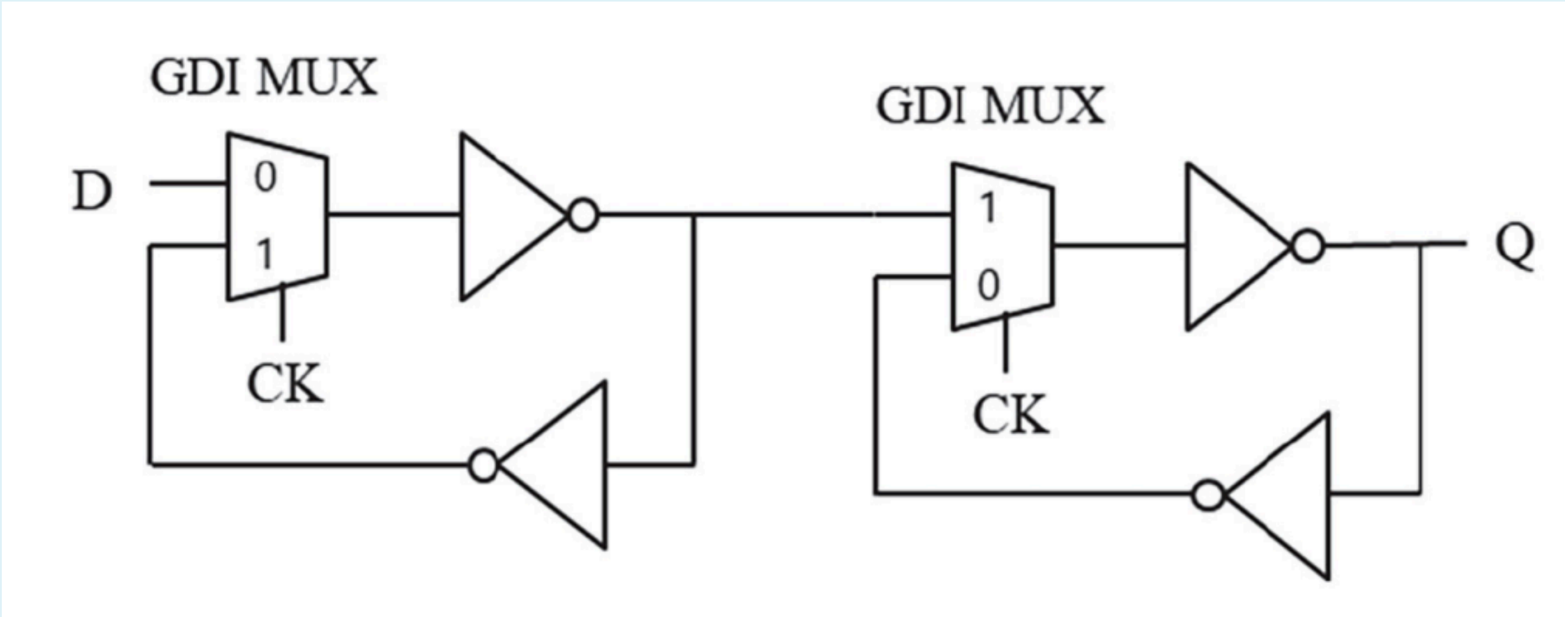

A GDI D Flip-Flop is a memory element designed using Gate Diffusion Input technique. It stores one bit of data on the clock edge, like a standard DFF, but uses fewer transistors. This makes it more power-efficient and compact, ideal for low-power VLSI designs.

GDI DFF SCHEMATIC

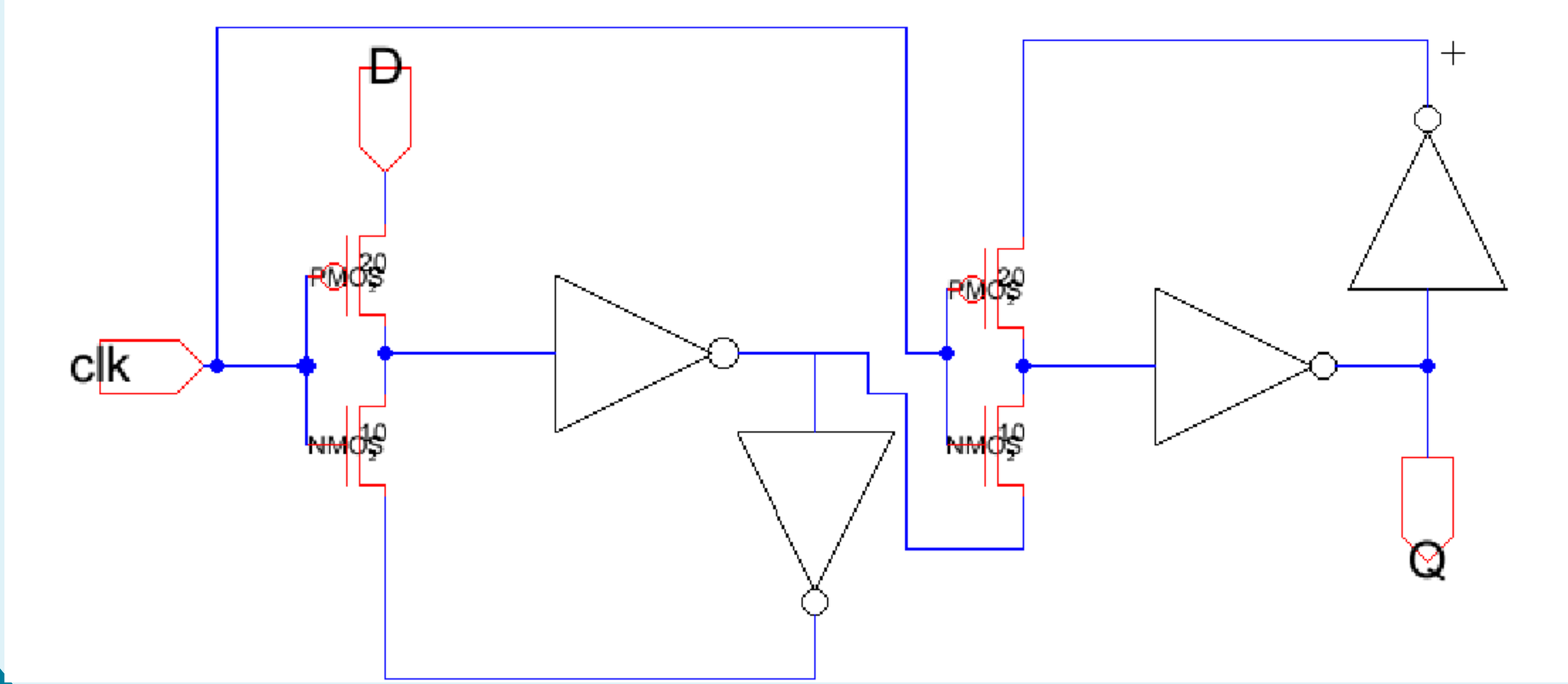

GDI DFF SCH. SIMULATION

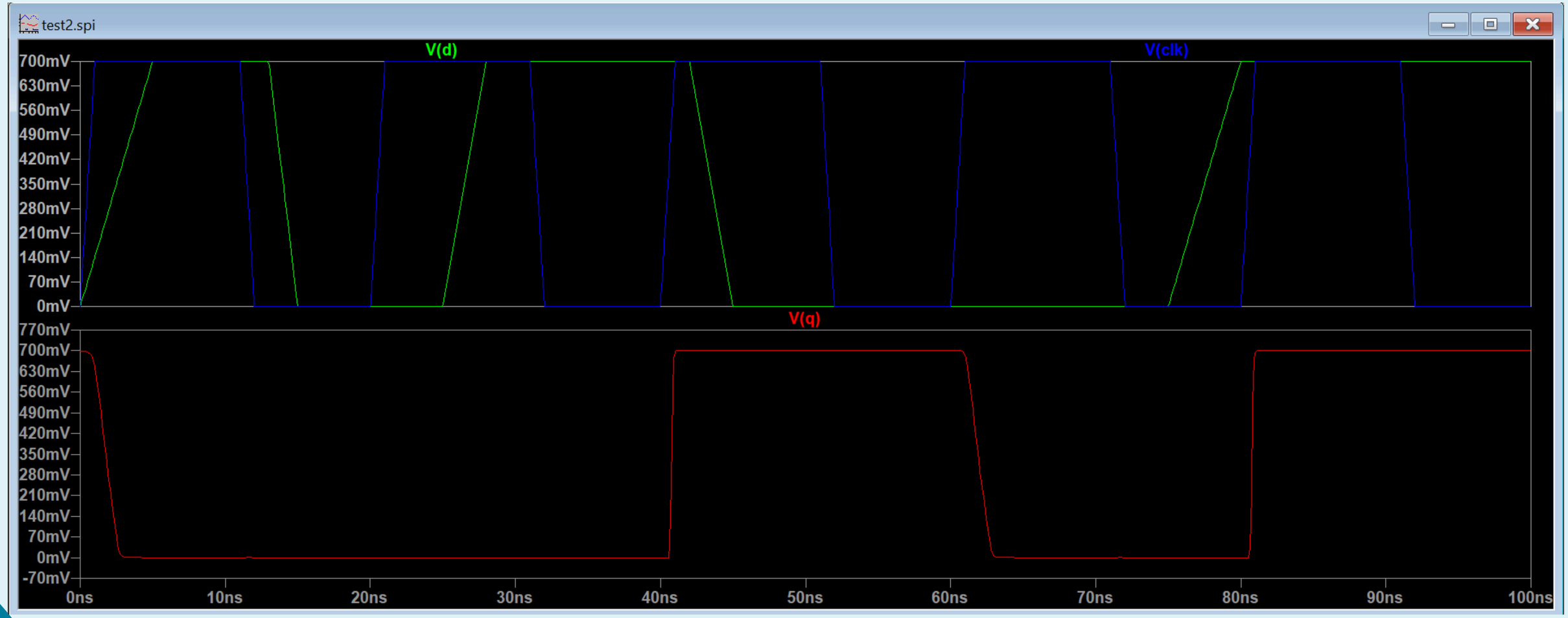

GDI DFF LAYOUT

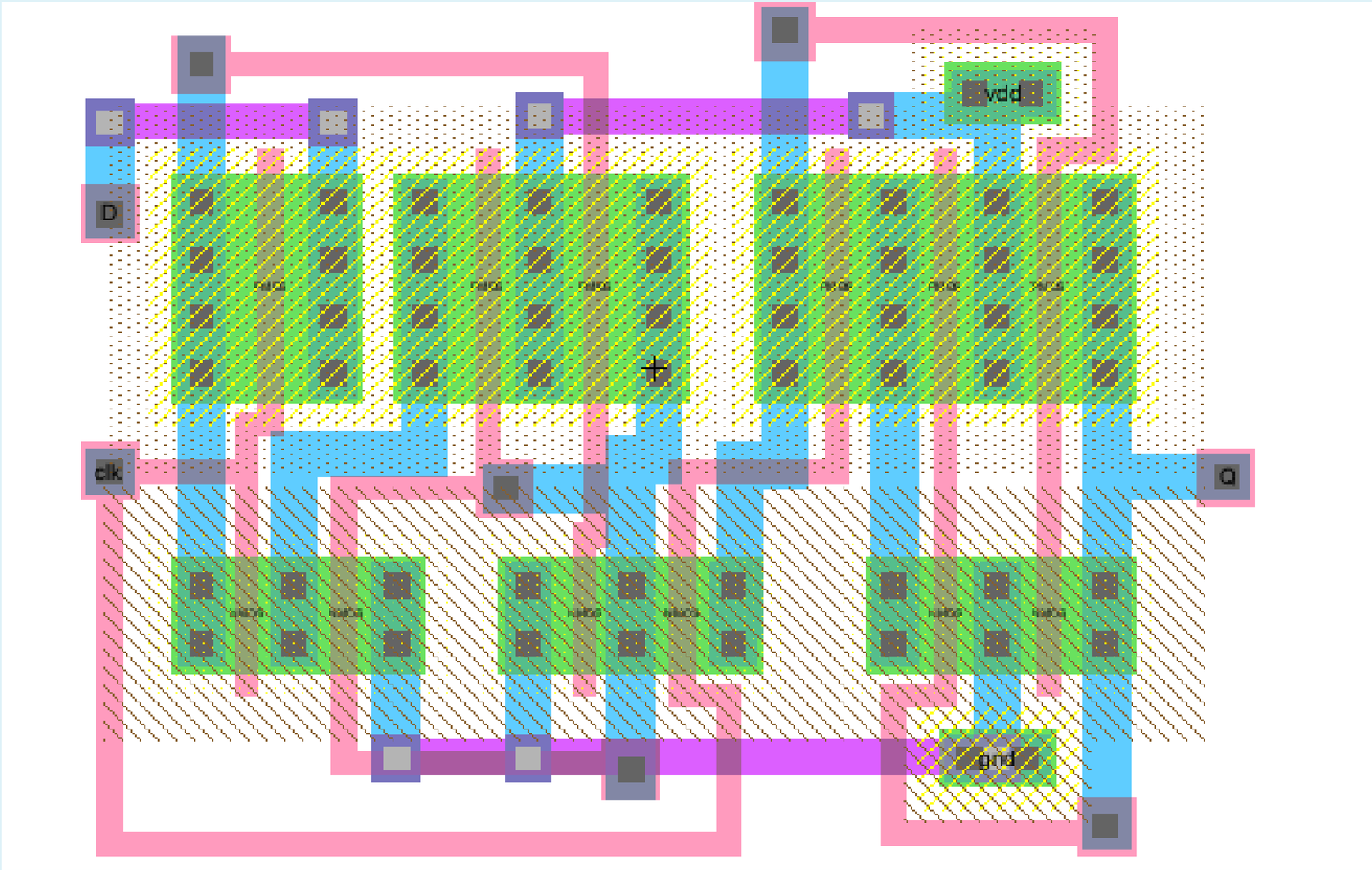

GDI DFF LAYOUT SIMULATION

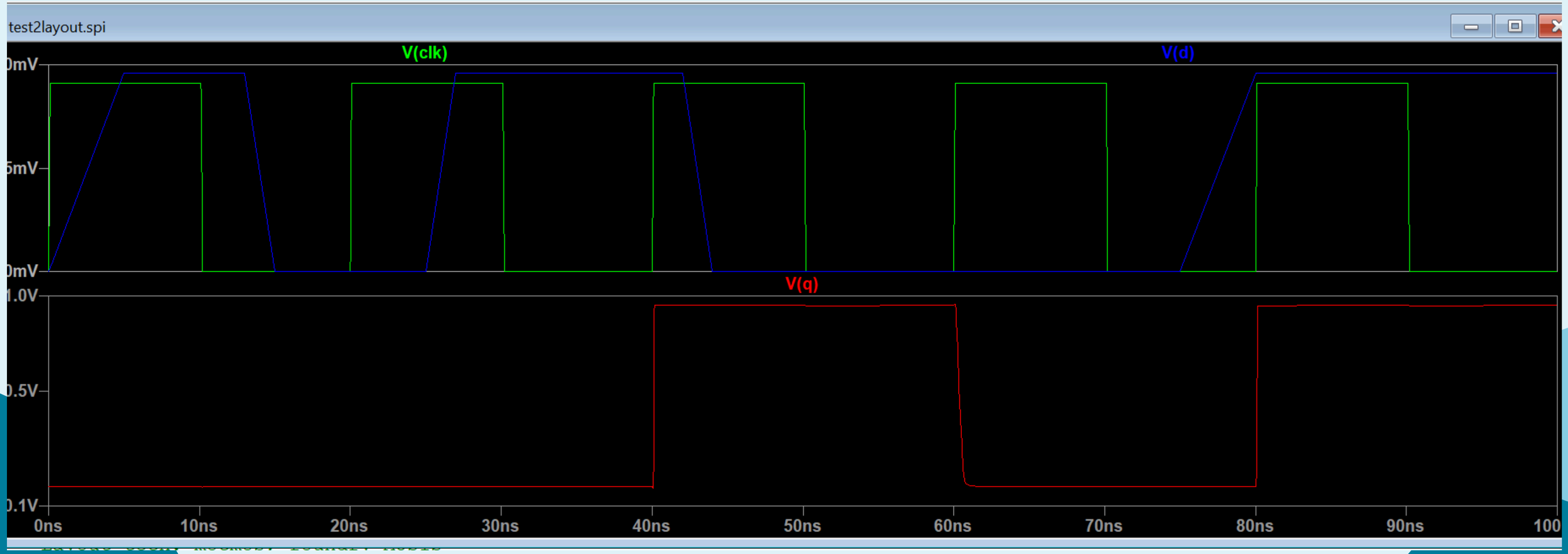

GDI DFF RESULTS

SPICE Error Log: C:\Users\hp\Downloads\test2.log

```
Gmin = 2.52173e-012
Gmin = 2.70769e-013
Gmin = 0
Gmin stepping succeeded in finding the operating point.


td=4.02752e-008 FROM 5e-010 TO 4.07752e-008
trise=2.20224e-010 FROM 4.06573e-008 TO 4.08775e-008
tfall=1.4444e-009 FROM 1.06441e-009 TO 2.50881e-009
idd_avg: AVG(i(vdd))=-8.16726e-008 FROM 0 TO 1e-007
vdd_avg: AVG(v(vdd))=0.7 FROM 0 TO 1e-007


Date: Sun Jun 15 22:07:39 2025
Total elapsed time: 0.321 seconds.

tnom = 27
temp = 27
method = modified trap
totiter = 3157
traniter = 2759
tranpoints = 1149
accept = 1129
rejected = 20
matrix size = 60
fillins = 0
solver = Normal
Matrix Compiler1: 7.93 KB object code size  1.3/0.8/[0.6]
Matrix Compiler2: 7.32 KB object code size  1.0/1.9/[1.0]
```

Power= I*V = 173.54 nano Watt

RESULTS COMPARISON

	CMOS Based D flip flop	GDI Based D flip flop
Supply voltage	0.85v	0.7v
Avg power	377.46nW	173.54nW
Propagation delay (td)	40.13ns	40.19ns
Rise time	68.84ps	223.6ps
Fall time	56.52ps	730.6ps
Avg current	444.07nA	247.91nA
Transistor count	26 Transistors	12 Transistors
Area	Larger	Smaller
Power efficiency	Lower	Higher
Design complexity	More complex	Simpler

INVERTER SCHEMATIC

Used in both CMOS and GDI DFF schematics for better observation

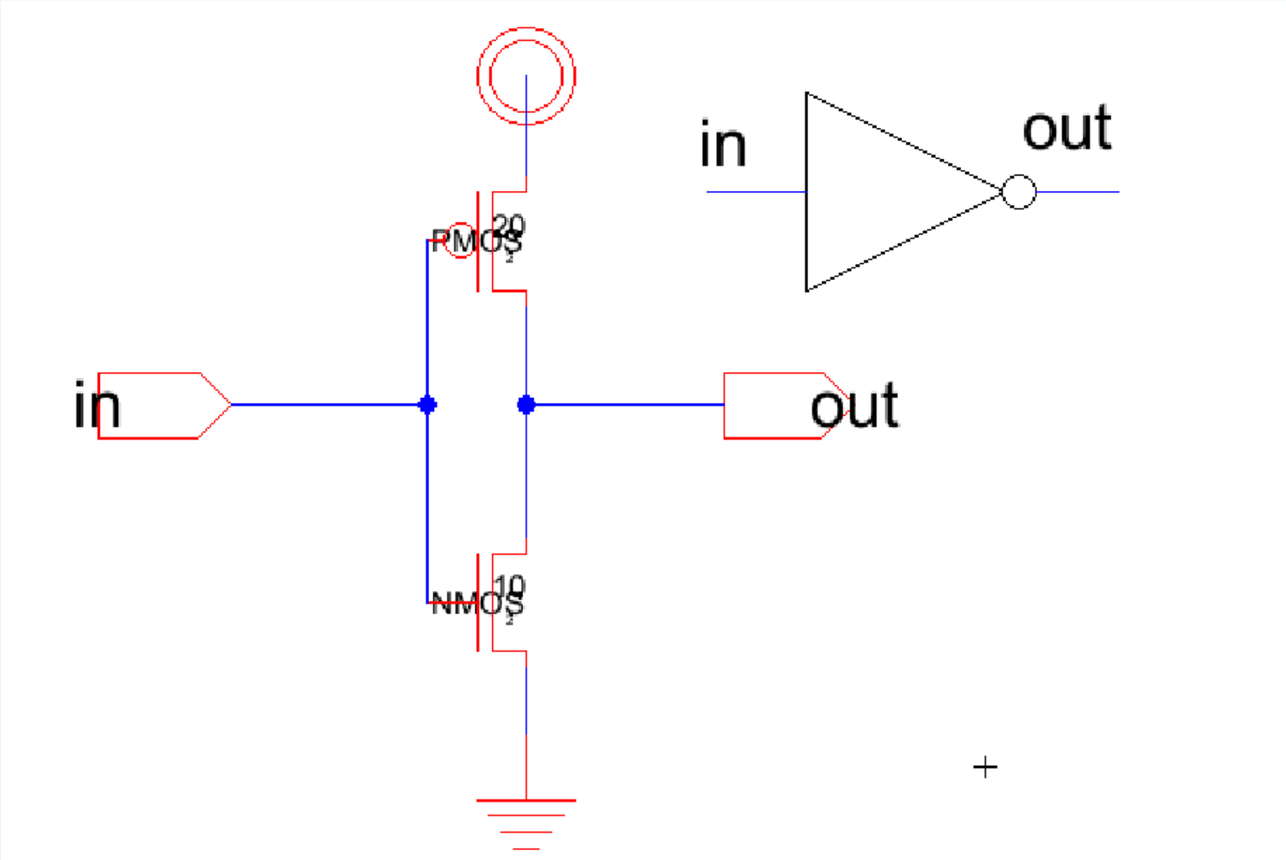

CONCLUSION

- In this project, we successfully designed and simulated D Flip-Flops using both CMOS and GDI logic styles.
- Our results showed that the GDI-based D Flip-Flop consumed significantly less power (173.54 nW) compared to the CMOS design (377.46 nW), while maintaining correct functionality.
- Although CMOS offers better noise margins and compatibility with standard processes, GDI provides advantages in power efficiency and area reduction, making it more suitable for low-power VLSI applications.
- This project highlighted the trade-offs between design complexity, power, and performance in modern IC design.

THANK YOU