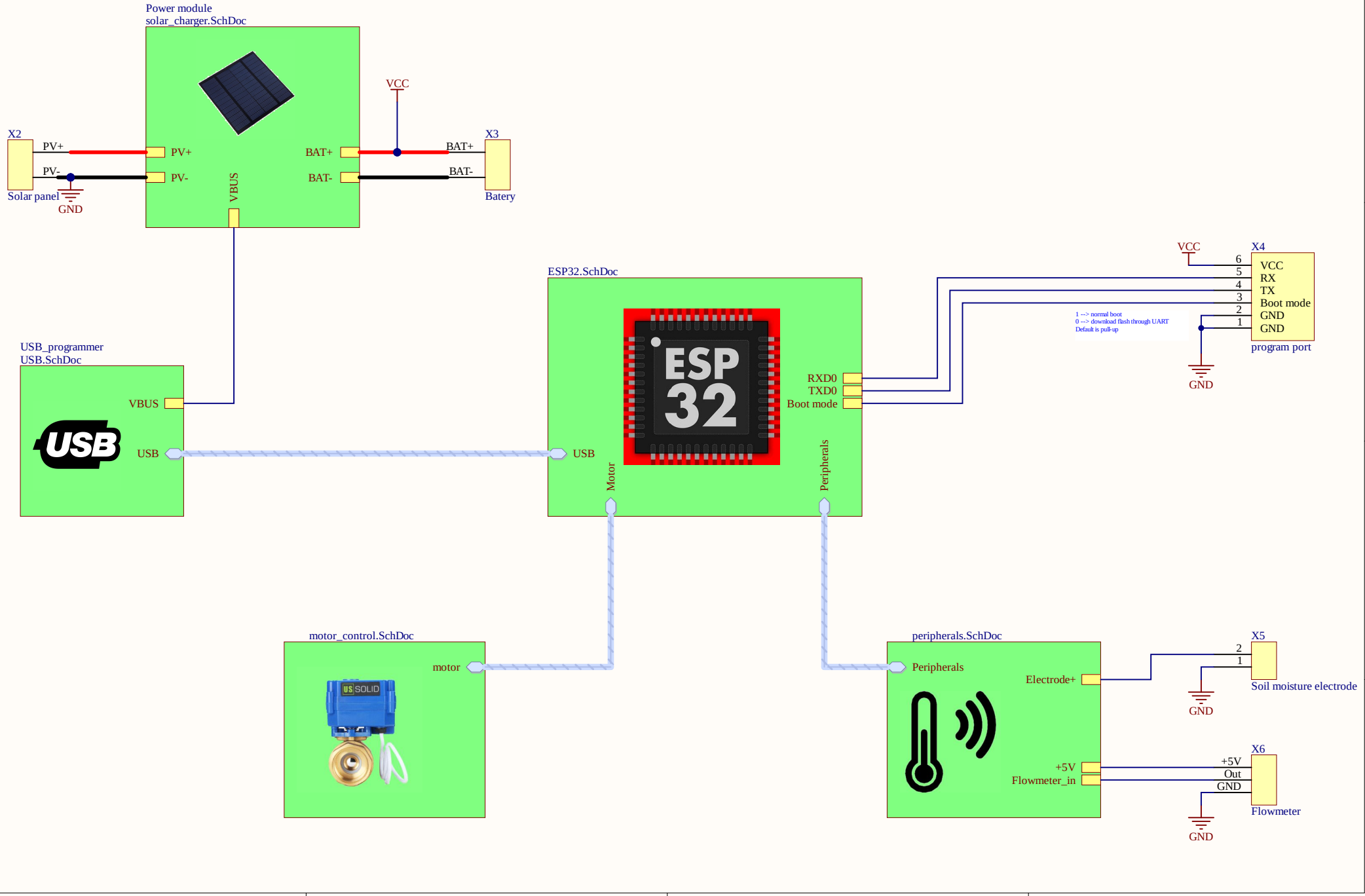
Power module
solar_charger.SchDoc
X2
PV+
PV-
Solar panel
GND
PV+
PV-
VBUS
VCC
BAT+
BAT-
X3
BAT+
BAT-
Batery
USB_programmer
USB.SchDoc
VBUS
USB
ESP32.SchDoc
USB
Motor
Peripherals
RXD0
TXD0
Boot mode
ESP
32
1 --> normal boot
0 --> download flash through UART
Default is pull-up
VCC
X4
6
5
4
3
2
1
VCC
RX
TX
Boot mode
GND
GND
program port
GND
motor_control.SchDoc
motor
US SOLID
peripherals.SchDoc
Peripherals
Electrode+
+5V
Flowmeter_in
X5
2
1
Soil moisture electrode
GND
X6
+5V
Out
GND
Flowmeter
GND

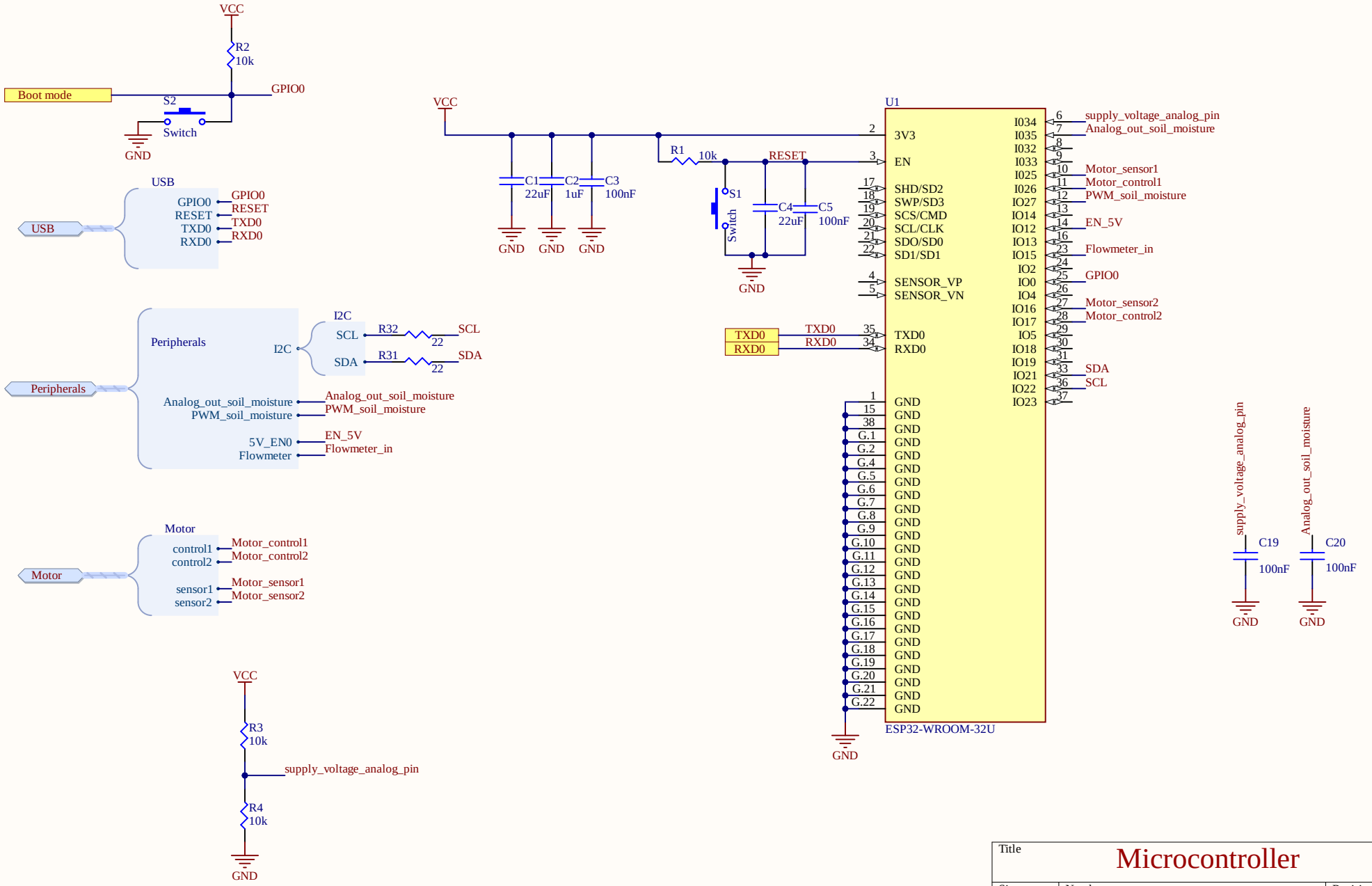

Title	Microcontroller	
Size: A4	Number	Revision
Date: 4. 30. 2021		Sheet of
File: D:\saját\..\ESP32.SchDoc		Drawn By:

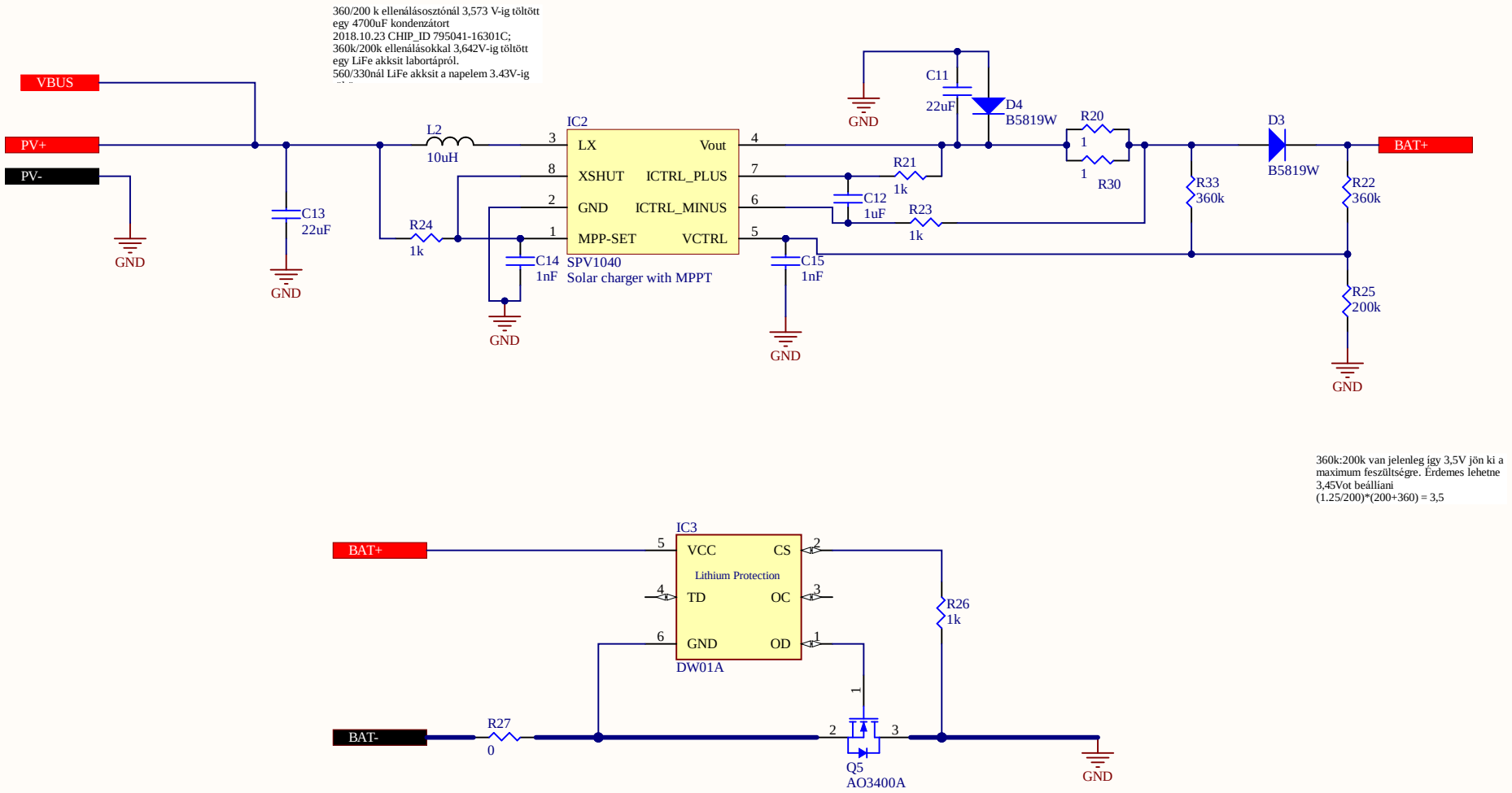

Title	Solar Charger	
Size: A4	Number	Revision
Date: 4. 30. 2021		Sheet of
File: D:\saját\..\solar_charger.SchDoc		Drawn By:

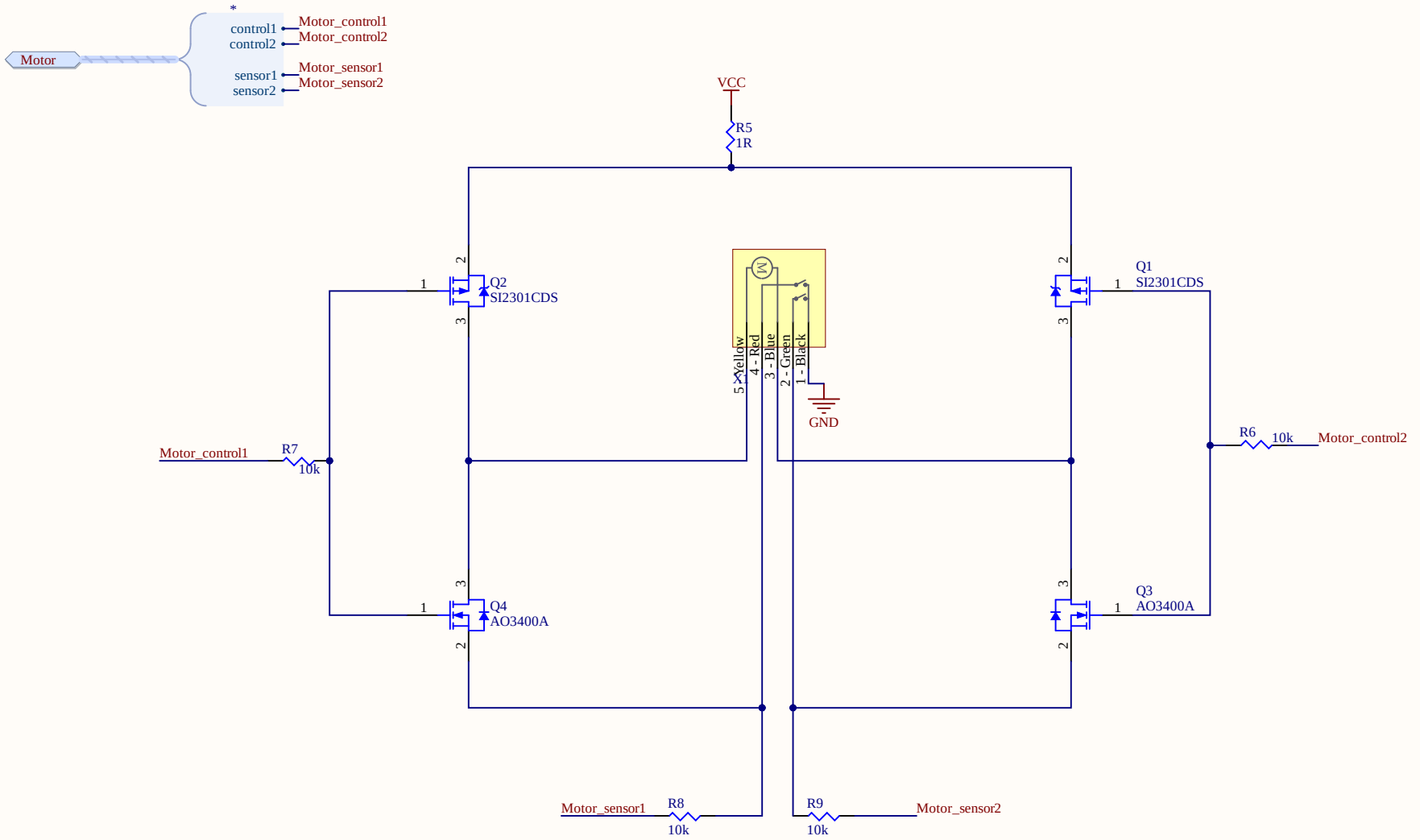

Title	H-Bridge	
Size: A4	Number:	Revision:
Date: 4. 30. 2021		Sheet of
File: D:\saját\..\motor_control.SchDoc		Drawn By:

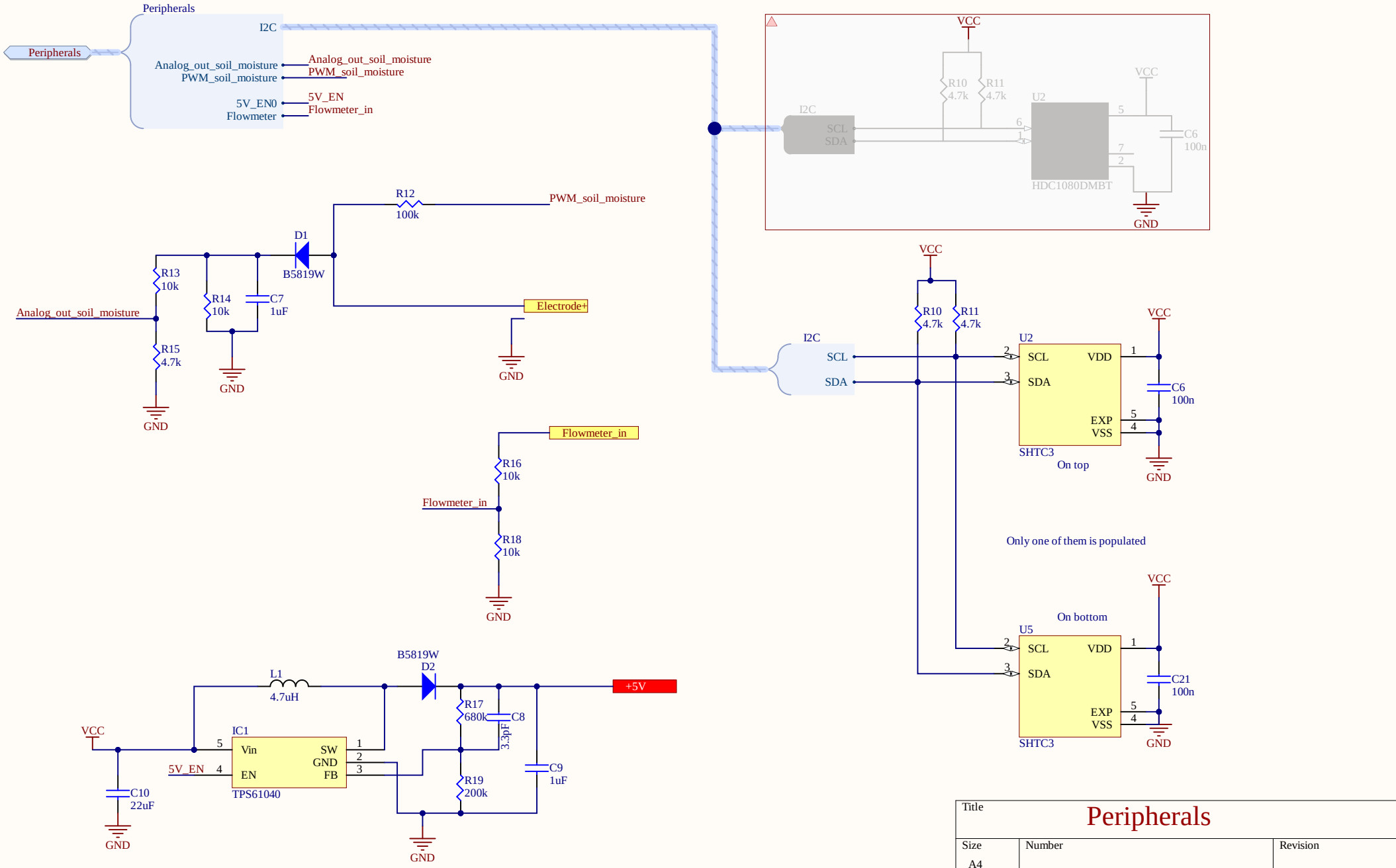
Peripherals
I2C
Analog_out_soil_moisture
PWM_soil_moisture
5V_EN0
Flowmeter
Peripherals
Analog_out_soil_moisture
PWM_soil_moisture
5V_EN
Flowmeter_in
VCC
R10
4.7k
R11
4.7k
U2
I2C
SCL
SDA
HDC1080DMBT
C6
100n
GND
R12
100k
PWM_soil_moisture
D1
B5819W
R13
10k
R14
10k
C7
1uF
Analog_out_soil_moisture
R15
4.7k
Electrode+
GND
GND
GND
Flowmeter_in
R16
10k
Flowmeter_in
R18
10k
GND
VCC
R10
4.7k
R11
4.7k
I2C
SCL
SDA
U2
SCL
SDA
VDD
EXP
VSS
SHTC3
On top
C6
100n
GND
Only one of them is populated
On bottom
U5
SCL
SDA
VDD
EXP
VSS
SHTC3
C21
100n
GND
B5819W
D2
L1
4.7uH
+5V
R17
680k
C8
3.3pF
VCC
IC1
Vin
SW
GND
FB
EN
5V_EN
TPS61040
C9
1uF
R19
200k
C10
22uF
GND
GND
Title
Peripherals
Size
A4
Number
Revision
Date:
4. 30. 2021
Sheet of
File:
D:\saját\..\peripherals.SchDoc
Drawn By:

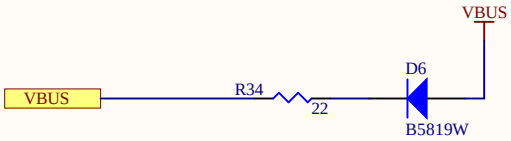

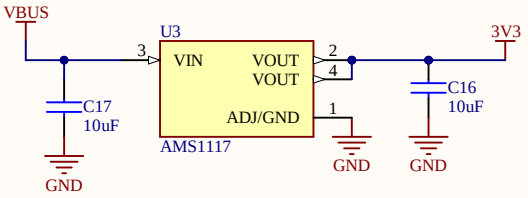

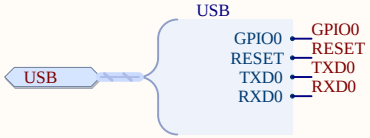

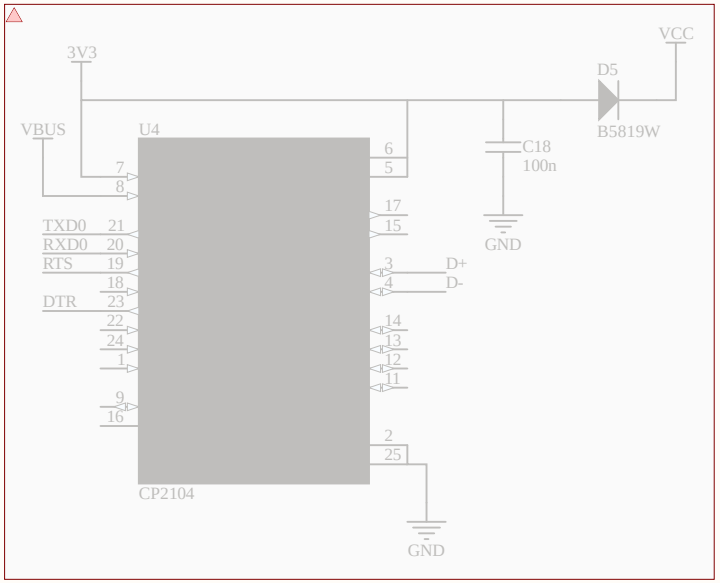

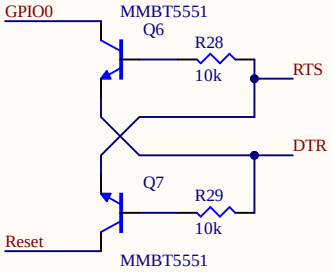

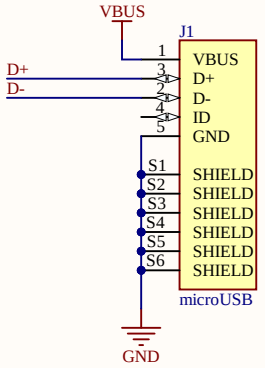

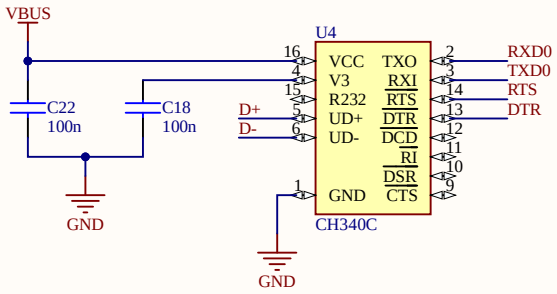

Title	USB - Serial communication	
Size: A4	Number:	Revision:
Date: 4. 30. 2021		Sheet of
File: D:\saját\..\USB.SchDoc		Drawn By:

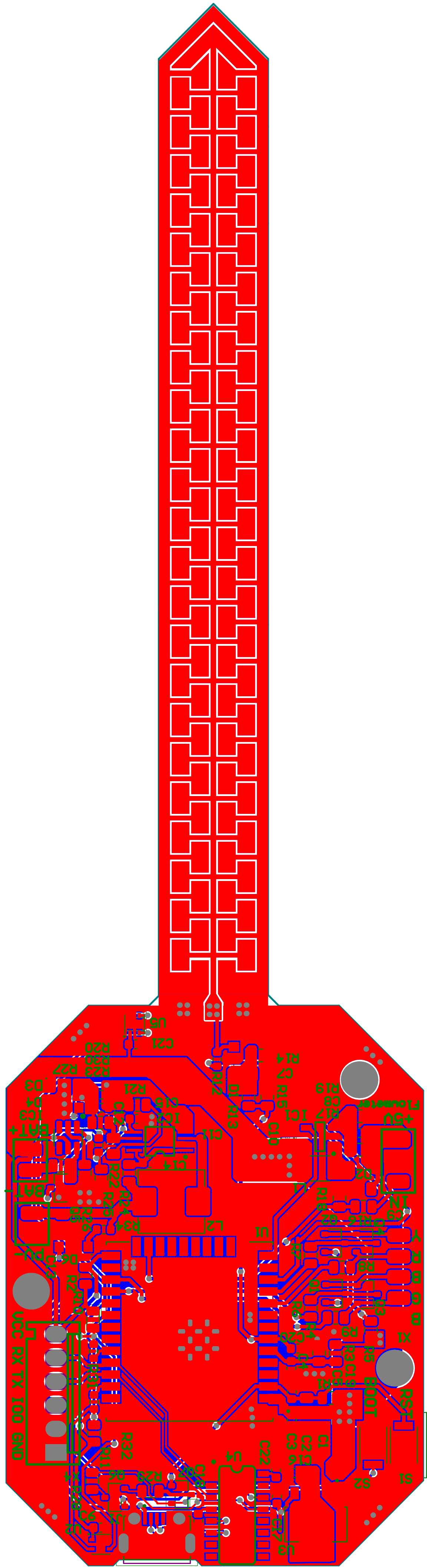
VCC
RX
TX
IO0
GND
BOOT
RST
+5V
BAT+
BAT-
IN
U1
U2
U3
U4
U5
L1
L2
L3
L4
L5
L6
L7
L8
L9
L10
L11
L12
L13
L14
L15
L16
L17
L18
L19
L20
L21
L22
L23
L24
L25
L26
L27
L28
L29
L30
L31
L32
L33
L34
L35
L36
L37
L38
L39
L40
L41
L42
L43
L44
L45
L46
L47
L48
L49
L50
L51
L52
L53
L54
L55
L56
L57
L58
L59
L60
L61
L62
L63
L64
L65
L66
L67
L68
L69
L70
L71
L72
L73
L74
L75
L76
L77
L78
L79
L80
L81
L82
L83
L84
L85
L86
L87
L88
L89
L90
L91
L92
L93
L94
L95
L96
L97
L98
L99
L100
L101
L102
L103
L104
L105
L106
L107
L108
L109
L110
L111
L112
L113
L114
L115
L116
L117
L118
L119
L120
L121
L122
L123
L124
L125
L126
L127
L128
L129
L130
L131
L132
L133
L134
L135
L136
L137
L138
L139
L140
L141
L142
L143
L144
L145
L146
L147
L148
L149
L150
L151
L152
L153
L154
L155
L156
L157
L158
L159
L160
L161
L162
L163
L164
L165
L166
L167
L168
L169
L170
L171
L172
L173
L174
L175
L176
L177
L178
L179
L180
L181
L182
L183
L184
L185
L186
L187
L188
L189
L190
L191
L192
L193
L194
L195
L196
L197
L198
L199
L200
L201
L202
L203
L204
L205
L206
L207
L208
L209
L210
L211
L212
L213
L214
L215
L216
L217
L218
L219
L220
L221
L222
L223
L224
L225
L226
L227
L228
L229
L230
L231
L232
L233
L234
L235
L236
L237
L238
L239
L240
L241
L242
L243
L244
L245
L246
L247
L248
L249
L250
L251
L252
L253
L254
L255
L256
L257
L258
L259
L260
L261
L262
L263
L264
L265
L266
L267
L268
L269
L270
L271
L272
L273
L274
L275
L276
L277
L278
L279
L280
L281
L282
L283
L284
L285
L286
L287
L288
L289
L290
L291
L292
L293
L294
L295
L296
L297
L298
L299
L300
L301
L302
L303
L304
L305
L306
L307
L308
L309
L310
L311
L312
L313
L314
L315
L316
L317
L318
L319
L320
L321
L322
L323
L324
L325
L326
L327
L328
L329
L330
L331
L332
L333
L334
L335
L336
L337
L338
L339
L340
L341
L342
L343
L344
L345
L346
L347
L348
L349
L350
L351
L352
L353
L354
L355
L356
L357
L358
L359
L360
L361
L362
L363
L364
L365
L366
L367
L368
L369
L370
L371
L372
L373
L374
L375
L376
L377
L378
L379
L380
L381
L382
L383
L384
L385
L386
L387
L388
L389
L390
L391
L392
L393
L394
L395
L396
L397
L398
L399
L400
L401
L402
L403
L404
L405
L406
L407
L408
L409
L410
L411
L412
L413
L414
L415
L416
L417
L418
L419
L420
L421
L422
L423
L424
L425
L426
L427
L428
L429
L430
L431
L432
L433
L434
L435
L436
L437
L438
L439
L440
L441
L442
L443
L444
L445
L446
L447
L448
L449
L450
L451
L452
L453
L454
L455
L456
L457
L458
L459
L460
L461
L462
L463
L464
L465
L466
L467
L468
L469
L470
L471
L472
L473
L474
L475
L476
L477
L478
L479
L480
L481
L482
L483
L484
L485
L486
L487
L488
L489
L490
L491
L492
L493
L494
L495
L496
L497
L498
L499
L500
L501
L502
L503
L504
L505
L506
L507
L508
L509
L510
L511
L512
L513
L514
L515
L516
L517
L518
L519
L520
L521
L522
L523
L524
L525
L526
L527
L528
L529
L530
L531
L532
L533
L534
L535
L536
L537
L538
L539
L540
L541
L542
L543
L544
L545
L546
L547
L548
L549
L550
L551
L552
L553
L554
L555
L556
L557
L558
L559
L560
L561
L562
L563
L564
L565
L566
L567
L568
L569
L570
L571
L572
L573
L574
L575
L576
L577
L578
L579
L580
L581
L582
L583
L584
L585
L586
L587
L588
L589
L590
L591
L592
L593
L594
L595
L596
L597
L598
L599
L600
L601
L602
L603
L604
L605
L606
L607
L608
L609
L610
L611
L612
L613
L614
L615
L616
L617
L618
L619
L620
L621
L622
L623
L624
L625
L626
L627
L628
L629
L630
L631
L632
L633
L634
L635
L636
L637
L638
L639
L640
L641
L642
L643
L644
L645
L646
L647
L648
L649
L650
L651
L652
L653
L654
L655
L656
L657
L658
L659
L660
L661
L662
L663
L664
L665
L666
L667
L668
L669
L670
L671
L672
L673
L674
L675
L676
L677
L678
L679
L680
L681
L682
L683
L684
L685
L686
L687
L688
L689
L690
L691
L692
L693
L694
L695
L696
L697
L698
L699
L700
L701
L702
L703
L704
L705
L706
L707
L708
L709
L710
L711
L712
L713
L714
L715
L716
L717
L718
L719
L720
L721
L722
L723
L724
L725
L726
L727
L728
L729
L730
L731
L732
L733
L734
L735
L736
L737
L738
L739
L740
L741
L742
L743
L744
L745
L746
L747
L748
L749
L750
L751
L752
L753
L754
L755
L756
L757
L758
L759
L760
L761
L762
L763
L764
L765
L766
L767
L768
L769
L770
L771
L772
L773
L774
L775
L776
L777
L778
L779
L780
L781
L782
L783
L784
L785
L786
L787
L788
L789
L790
L791
L792
L793
L794
L795
L796
L797
L798
L799
L800
L801
L802
L803
L804
L805
L806
L807
L808
L809
L810
L811
L812
L813
L814
L815
L816
L817
L818
L819
L820
L821
L822
L823
L824
L825
L826
L827
L828
L829
L830
L831
L832
L833
L834
L835
L836
L837
L838
L839
L840
L841
L842
L843
L844
L845
L846
L847
L848
L849
L850
L851
L852
L853
L854
L855
L856
L857
L858
L859
L860
L861
L862
L863
L864
L865
L866
L867
L868
L869
L870
L871
L872
L873
L874
L875
L876
L877
L878
L879
L880
L881
L882
L883
L884
L885
L886
L887
L888
L889
L890
L891
L892
L893
L894
L895
L896
L897
L898
L899
L900
L901
L902
L903
L904
L905
L906
L907
L908
L909
L910
L911
L912
L913
L914
L915
L916
L917
L918
L919
L920
L921
L922
L923
L924
L925
L926
L927
L928
L929
L930
L931
L932
L933
L934
L935
L936
L937
L938
L939
L940
L941
L942
L943
L944
L945
L946
L947
L948
L949
L950
L951
L952
L953
L954
L955
L956
L957
L958
L959
L960
L961
L962
L963
L964
L965
L966
L967
L968
L969
L970
L971
L972
L973
L974
L975
L976
L977
L978
L979
L980
L981
L982
L983
L984
L985
L986
L987
L988
L989
L990
L991
L992
L993
L994
L995
L996
L997
L998
L999
L1000

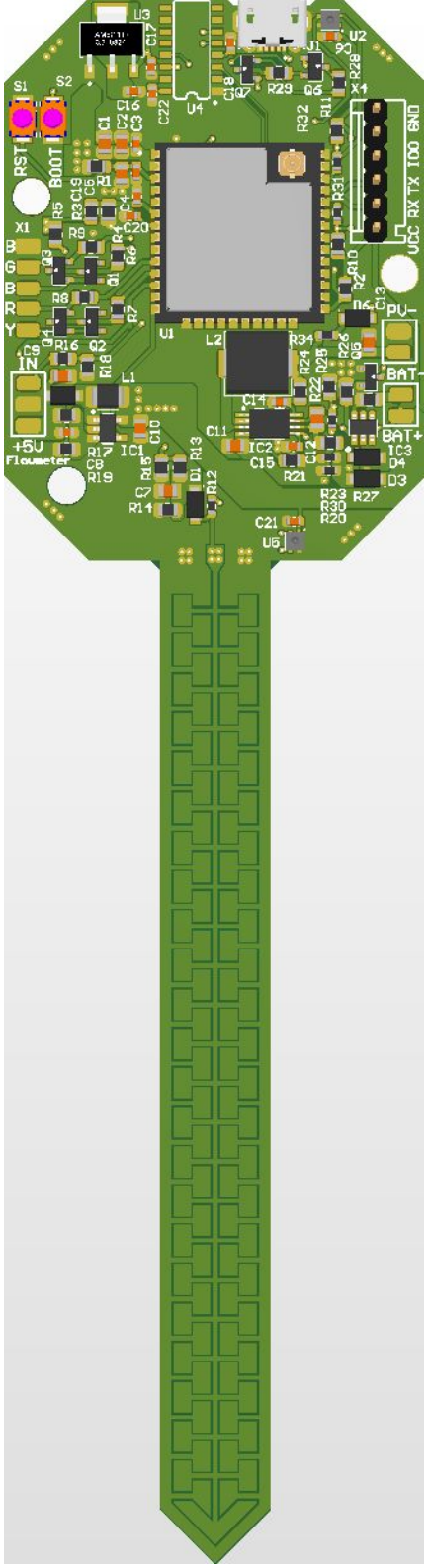

U3
C17
U2
J1
R28
S1
S2
C16
C22
U4
C18
R29
Q6
X4
C1
C2
C3
R32
R11
RST
BOOT
C6
R1
R31
VCC RX TX IO0 GND
R5
R3
C19
C4
X1
R9
R4
C20
B
G
B
R
Y
Q3
R6
Q1
R10
R2
R8
R7
D6
C13
PV-
U1
L2
R34
C9
R16
Q2
R18
R24
R25
Q5
IN
L1
BAT-
R22
C14
C10
C11
BAT+
+5V
Flowmeter
R17
IC1
R13
IC2
C12
IC3
C8
R19
R15
D1
C15
D4
R21
D3
C7
R12
R23
R27
R14
R30
R20
C21
U5

Designator	Quantity	Comment	LCSC Part #	Description	Footprint	LibRef
R1, R2, R3, R4, R6, R7, R8, R9, R13, R14, R16, R18, R28, R29	14	10k	C17414		RESC200X125X70L40N	Resistor
C1, C4, C10, C11, C13	5	22uF	C59461		CAPC200X125X110L50N	Capacitor
D1, D2, D3, D4, D6	5	B5819W	C8598		SODFL350X110-2N	Diode
C2, C7, C9, C12	4	1uF	C15849		CAPC200X125X110L50N	Capacitor
C3, C5, C19, C20	4	100nF	C14663		CAPC160X80X90L35N	Capacitor
C6, C18, C21, C22	4	100n	[NoValue], C14663		CAPC160X80X90L35N	Capacitor
R21, R23, R24, R26	4	1k	C17513		RESC200X125X70L40N	Resistor
Q3, Q4, Q5	3	AO3400A	C20917	N-FET	SOT23-3P95_240X114L20X40N	N-FET
R10, R11, R15	3	4.7k	C17673		RESC200X125X70L40N	Resistor
R31, R32, R34	3	22	C23345		RESC160X80X90L30N	Resistor
C14, C15	2	1nF	C1588		CAPC160X80X90L35N	Capacitor
C16, C17	2	10uF	C19702		CAPC160X80X90L35N	Capacitor
Q1, Q2	2	SI2301CDS	C10487	P-FET	SOT23-3P95_240X114L20X40N	P-FET
Q6, Q7	2	MMBT5551	C2145	Bipolar _BJT_ Transistor NPN 160V 600mA 225mW Surface Mount SOT-23-3 _TO-236_	SOT23-3P95_240X114L20X40N	MMBT5551
R19, R25	2	200k	C17539		RESC200X125X70L40N	Resistor
R20, R30	2	1	C22936		RESC160X80X90L30N	Resistor
R22, R33	2	360k	C23146, not polluted		RESC160X80X90L30N	Resistor
S1, S2	2	Switch	C115357	Switch	SKRKAEE020	Switch
U2, U5	2	SHTC3	[NoValue], C194656		SHTCx	SHTCx
C8	1	3.3pF	C46219	Optional	CAPC160X80X90L35N	Capacitor
IC1	1	TPS61040	C7722		SOT23-5	TPS61040
IC2	1	SPV1040	C221500		SPV1040	SPV1040
IC3	1	DW01A	C61503	Pushbutton Switch SPST-NC Standard Panel Mount, Front	CFP6P95_290X280X145L45X40N	DW01A
J1	1	microUSB	C404969	Micro USB	SHOUHAN_MICROXNJ	microUSB
L1	1	4.7uH	C1049	INDUCTOR	INDM320X250X240L55X190N	INDUCTOR
L2	1	10uH	C132141	INDUCTOR	INDM730X660X300L160X290N	INDUCTOR
R5	1	1R	C25271		RESC200X125X70L40N	Resistor
R12	1	100k	C17407		RESC160X80X90L30N	Resistor
R17	1	680k	C17797		RESC200X125X70L40N	Resistor
R27	1	0	C17477	This is a fuse!!!	RESC200X125X70L40N	Resistor
U1	1	ESP32-WROOM-32U	C277944	Bluetooth, WiFi 802.11b/g/n, Bluetooth v4.2 +EDR, Class 1, 2 and 3 Transceiver Module 2.4GHz ~ 2.5GHz Antenna Not Included, U.FL Surface Mount	ESP32-WROOM-32U	ESP32-WROOM-32U
U3	1	AMS1117	C6186	UNO PLUS Arduino R3 Shield, Xbee Arduino IDE Wheeled Robotics Kit	SOT229P700X180-4N	AMS1117
U4	1	CH340C	C84681	USB to serial chip CH340	SO016	CH340C
X1	1	motor_connector			motor_connector	motor_connector
X2	1	Solar panel			Solar Panel connenctor	Solar panel
X3	1	Batery			Battery connector	Batery
X4	1	program port	C239366		A2543WV-6P	program port - 6 pin
X5	1	Soil moisture electrode			Soil moisture sensor - long	Soil moisture sensor
X6	1	Flowmeter			Flowmeter	Flowmeter