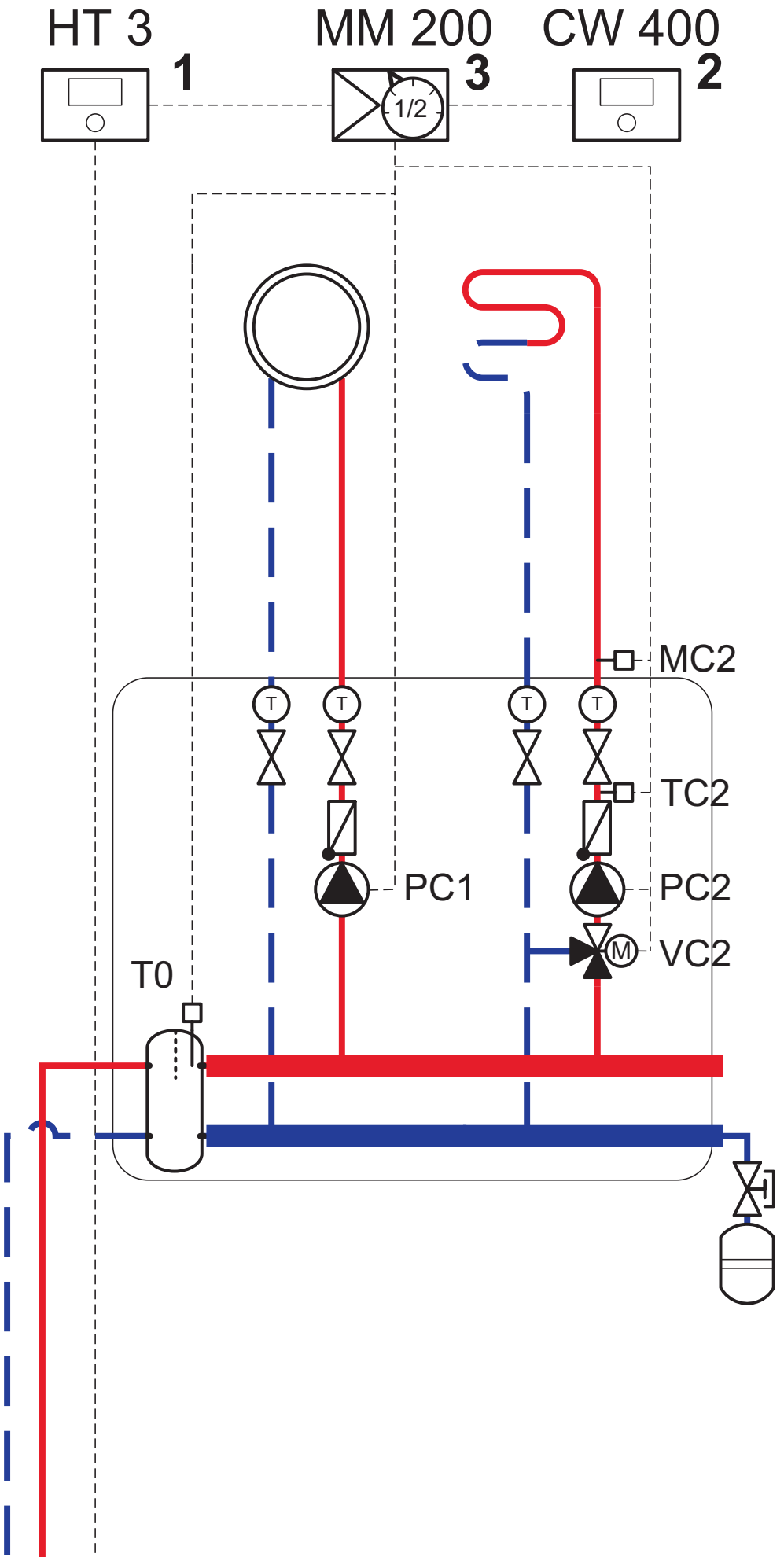
HT 3
1
MM 200
3
1/2
CW 400
2
MC2
T
T
T
T
TC2
PC1
PC2
M
VC2
T0