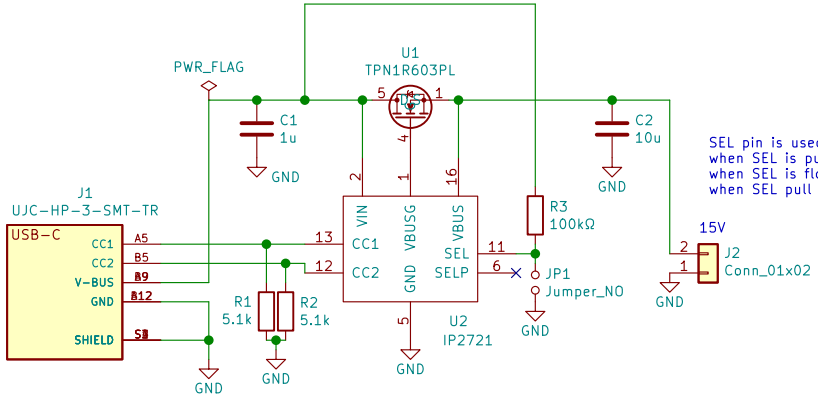

SEL pin is used to configure the maximum voltage that IP2721 will request,
when SEL is pulled to high voltage level VSELH, the maximum request voltage is 20V;
when SEL is floating, the maximum voltage that IP2721 request & SEL pull 100kohm resistor to VIN is VSELH is 15V;
when SEL pull down to GND, IP2721 only request 5V voltage.

Noriaki Nakagawa

CC BY

Sheet: /
File: IP2721_15V.sch

Title: USB PD IP2721

Size: A4	Date:	**Rev:**
KiCad E.D.A. kicad (5.1.10)-1		Id: 1/1