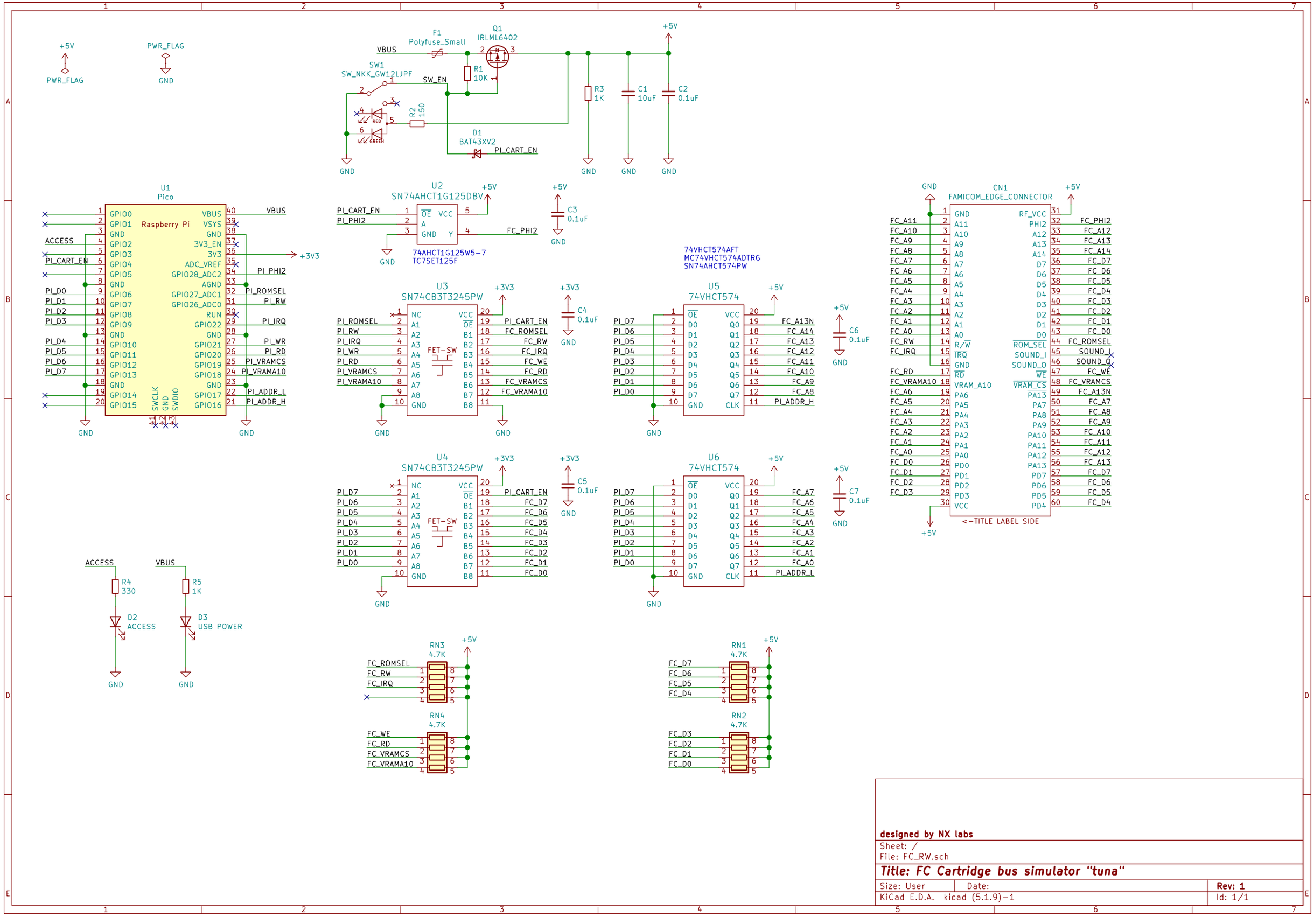

designed by NX labs

Sheet: /

File: FC_RW.sch

Title: FC Cartridge bus simulator "tuna"

Size: User	Date:	Rev: 1
KiCad E.D.A. kicad (5.1.9)-1		Id: 1/1