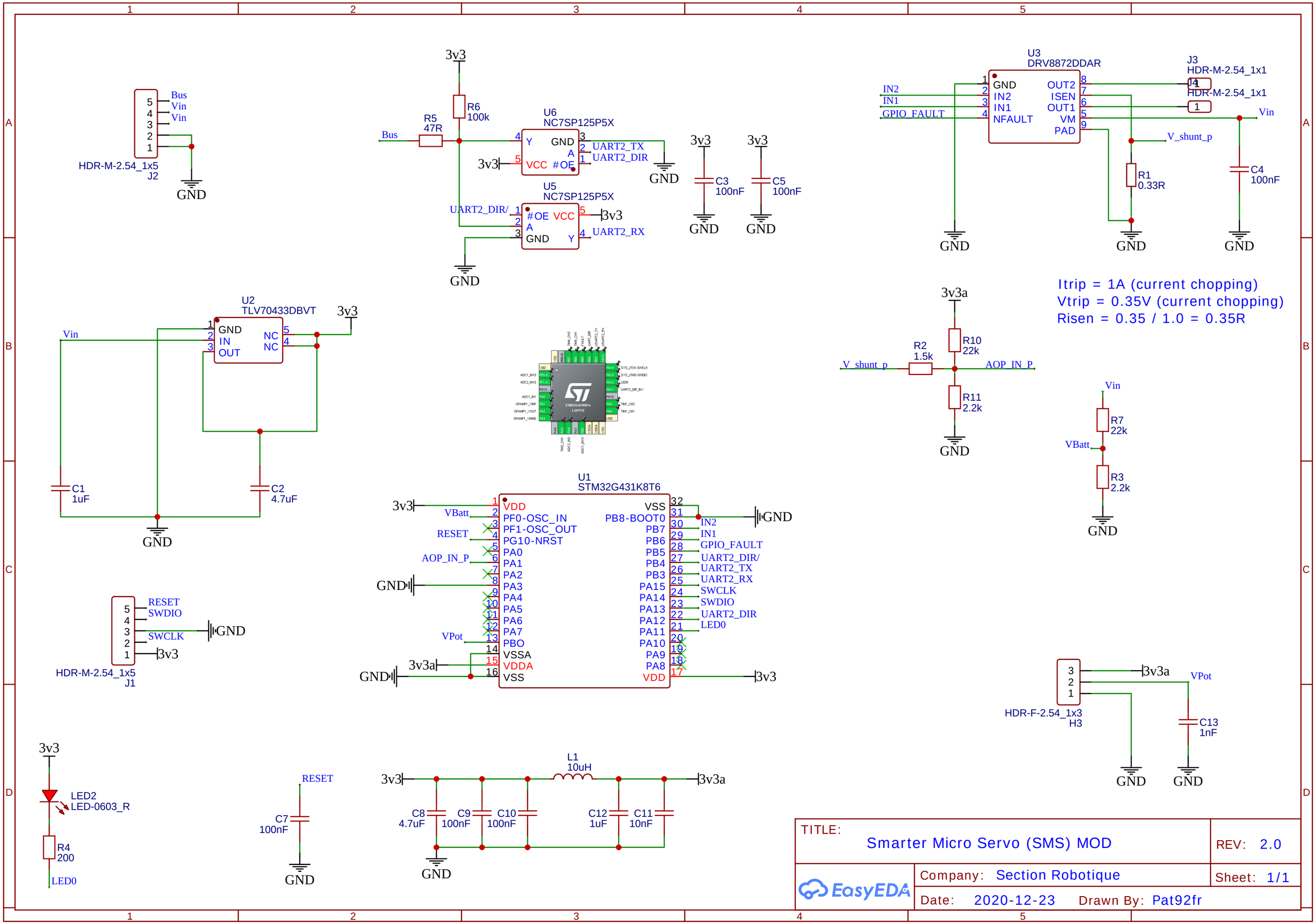

TITLE: Smarter Micro Servo (SMS) MOD	REV: 2.0
Company: Section Robotique	Sheet: 1/1
Date: 2020-12-23 Drawn By: Pat92fr	