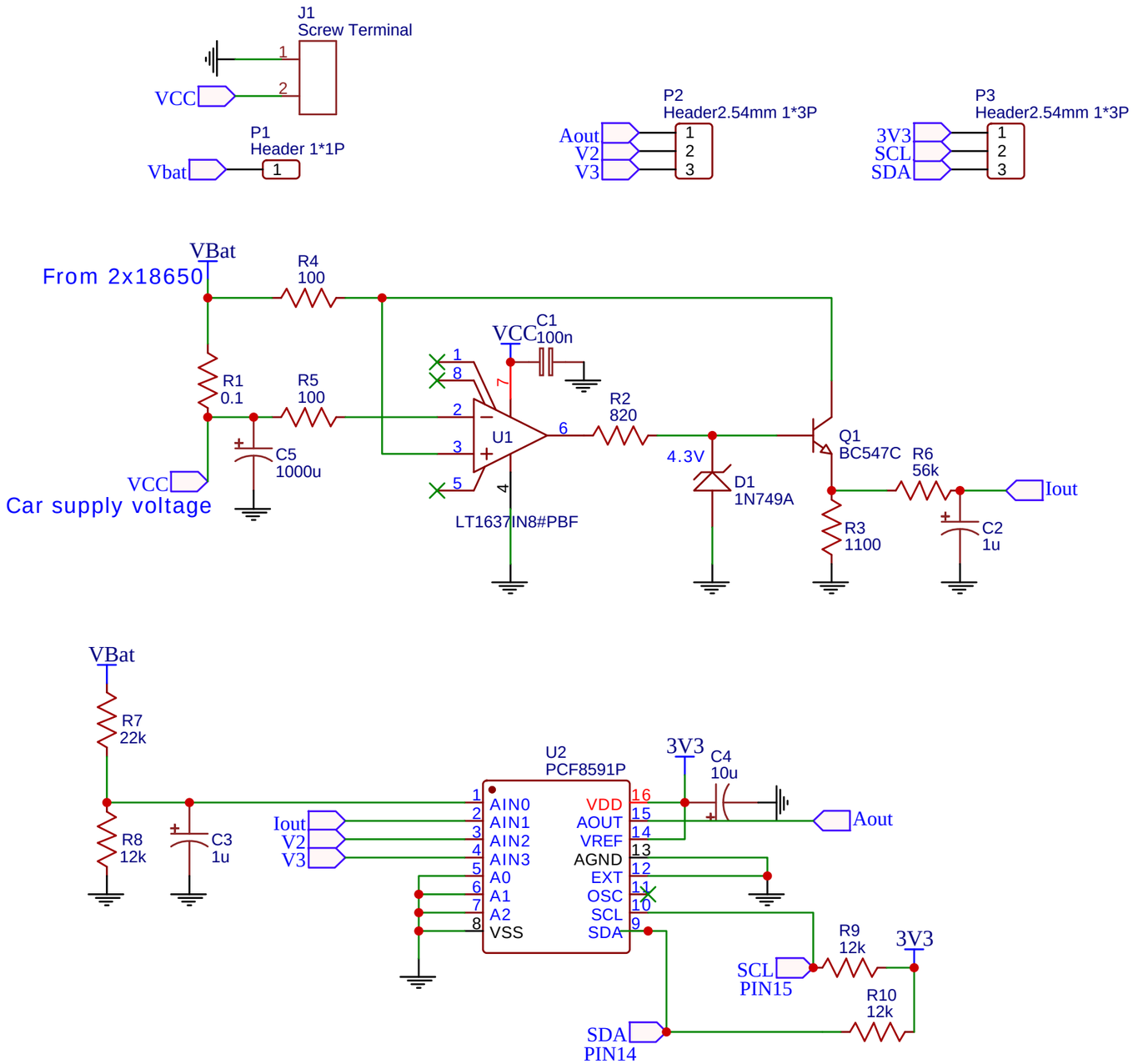


| | |
|---|---|
| TITLE: Voltage and current measurement | REV: 1.0 |
| Date: 2018-05-16 | Sheet: 1/1 |
| EasyEDA V5.3.14 | Drawn By: MrSpock |