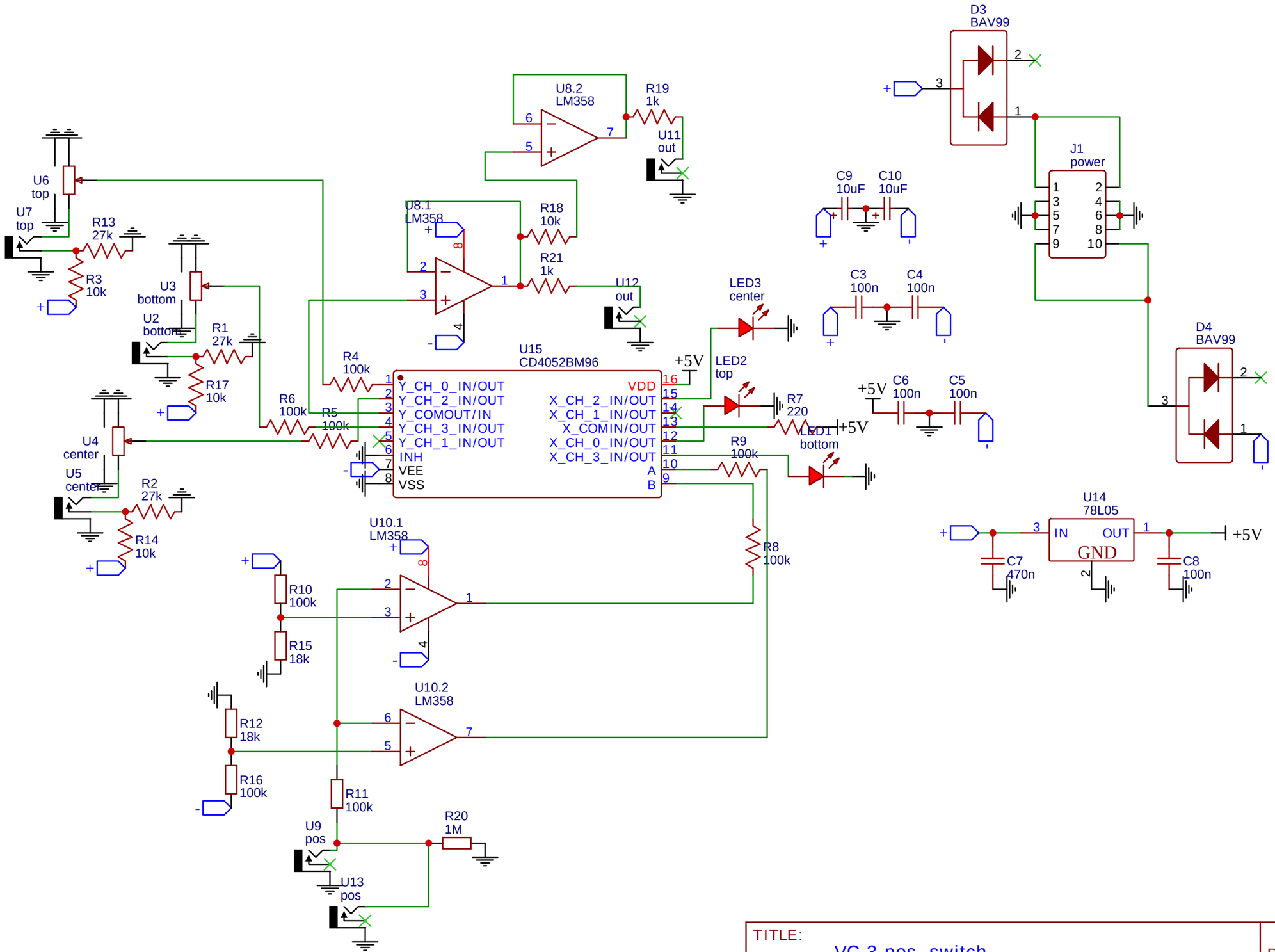

TITLE: VC 3 pos. switch		REV: 1.1
	Company: Not a Robot	Sheet: 1/1
	Date: 2025-03-11 Drawn By: Joost Markerink	