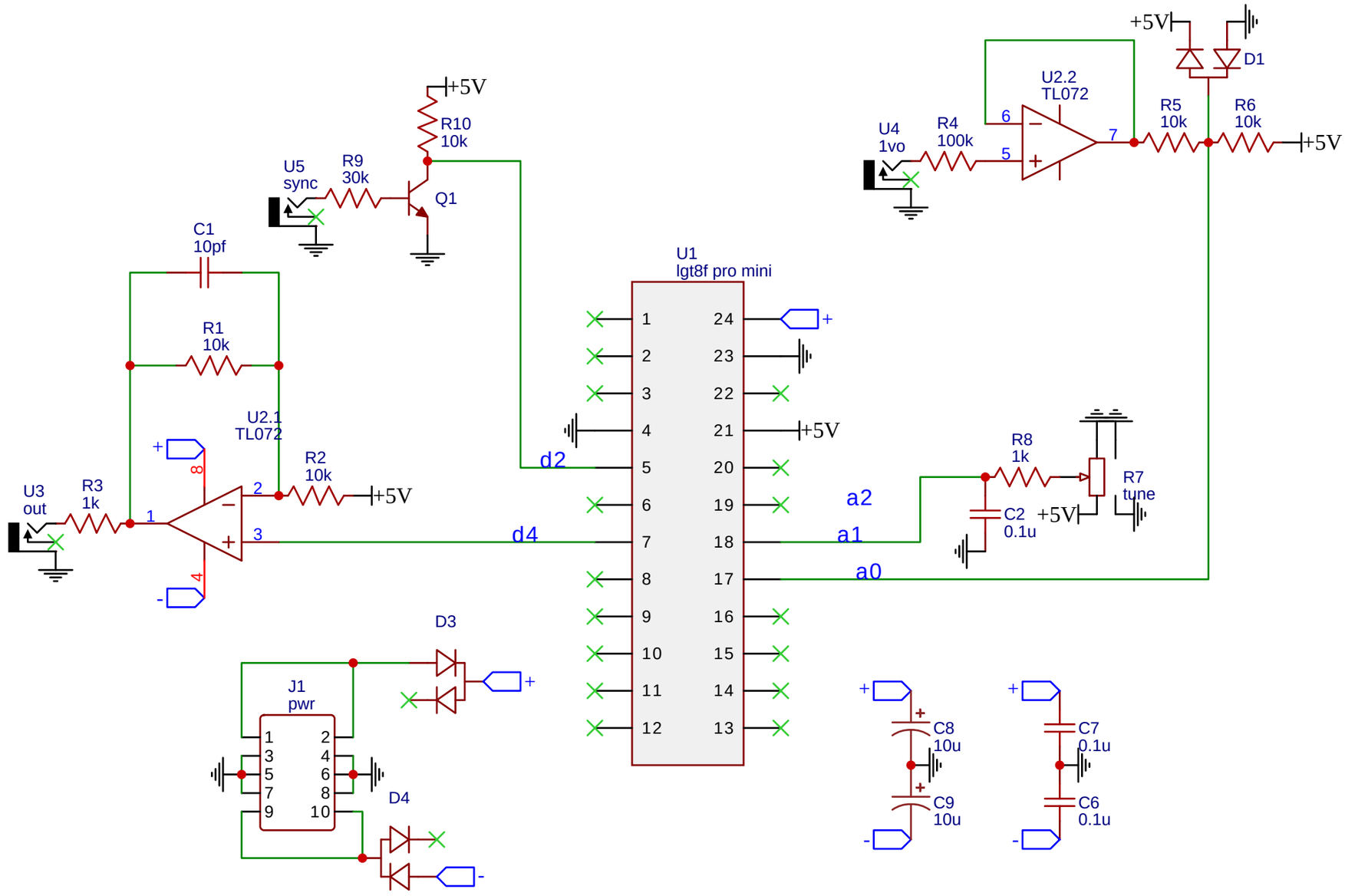

TITLE: 8bit sawtooth		REV: 1.0
	Company: Not a Robot	Sheet: 1/1
	Date: 2025-05-29 Drawn By: Joost Markerink	