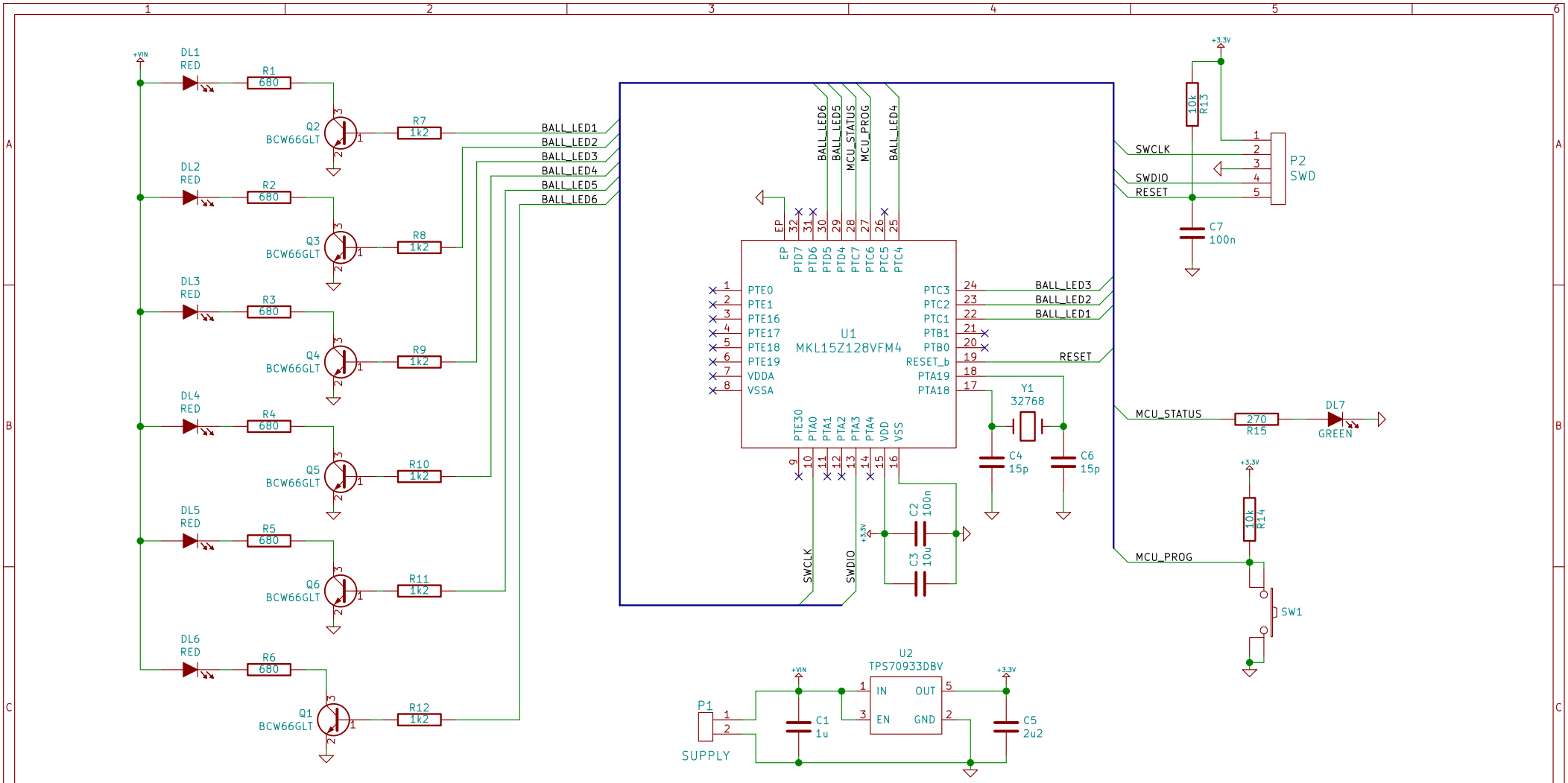

Disclaimer: this designs are provided "as is" and "with all faults". NOWAE disclaims all other warranties, express or implied, regarding products, including but not limited to, any implied warranties of merchantability or fitness for a particular purpose. NOWAE may make changes to specifications and product descriptions at any time, without notice. The Customer must not rely on the absence or characteristics of any features or istructions marked as "reserved" or "undefined". NOWAE reserves these for future definition and have no responsability whatsoever for conflicts or incompatibilities arising from future changes to them. The product informations on the Web Site or materials is subject to change without notice. Do not finalize a design with this information.

License: this work is licensed under the Creative Commons Attribution-ShareAlike 4.0 International License.
To view a copy of this license, visit http://creativecommons.org/licenses/by-sa/4.0/.

open source hardware

BY SA

NOWAE
www.nowae.it
info@nowae.it

Designer: M. Giammarini	Checked: N. Orlandini	Approved: N. Orlandini
File: nowae022.sch	Sheet: /	
Title: Christmas Tree Ball #1		
Size: A4 Last modify date:	Revision date: 2018-11-22	Rev: 0
KiCad E.D.A. kicad (5.0.0-3-g5ebb6b6)		Id: 1/1