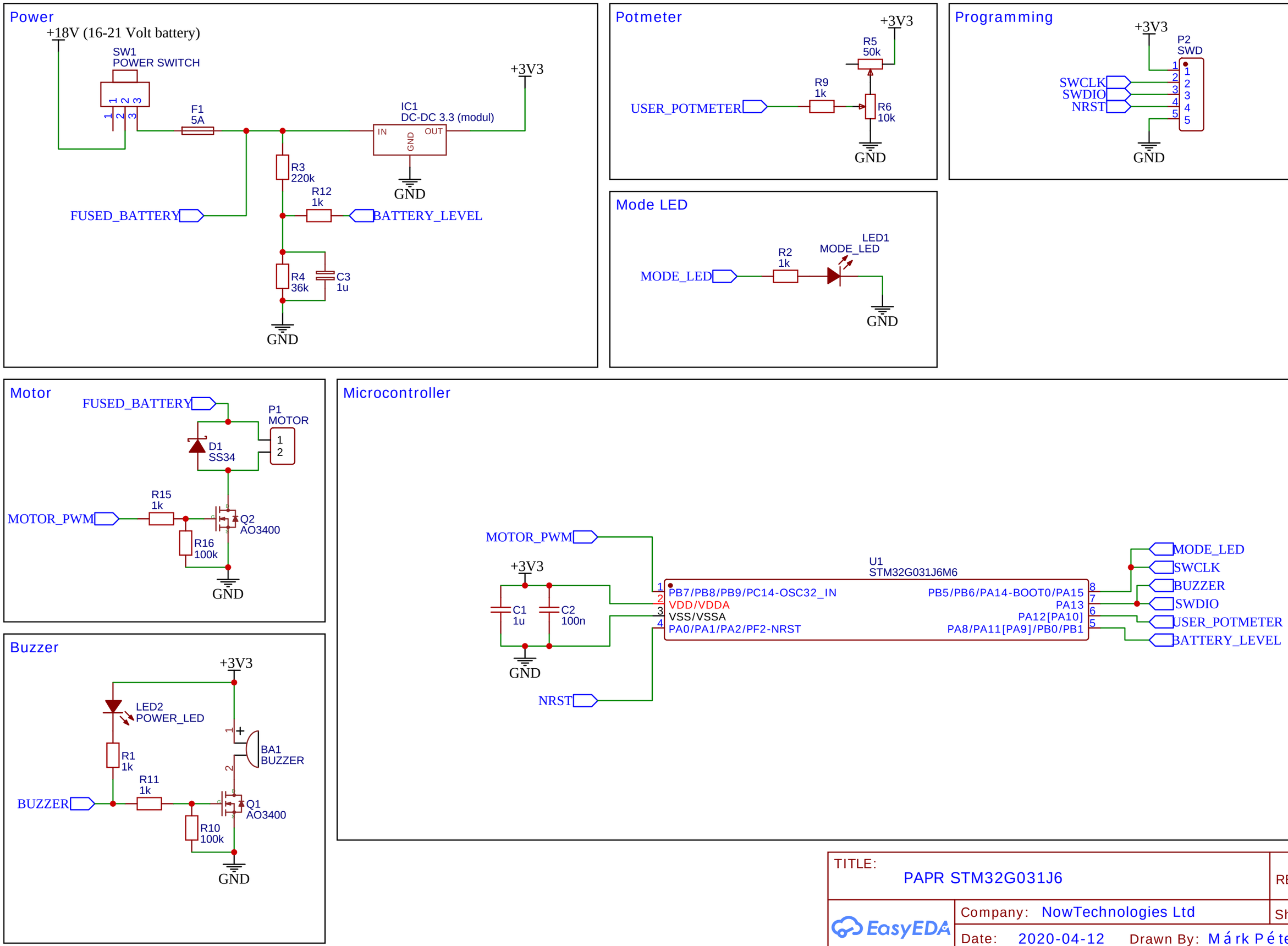

TITLE: PAPR STM32G031J6		REV: 1.0
EasyEDA	Company: NowTechnologies Ltd	Sheet: 1/1
	Date: 2020-04-12 Drawn By: Márk Péter Vargha	