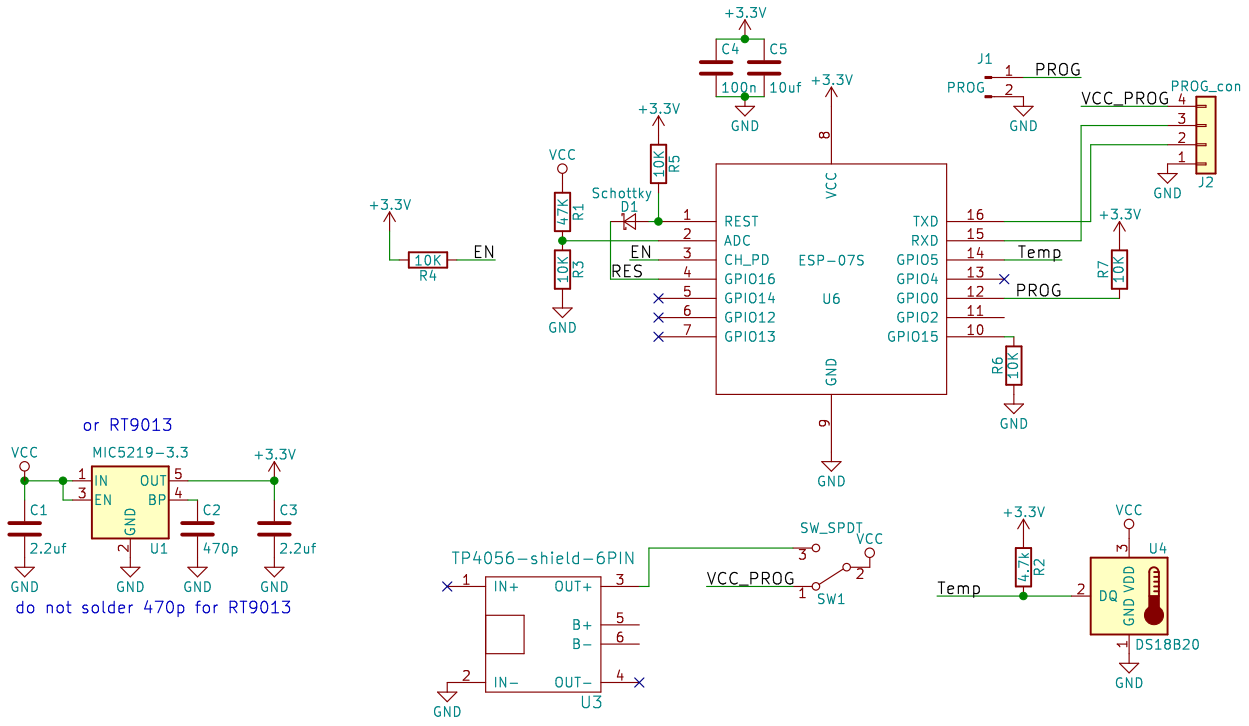
+3.3V
C4
C5
100n
10uf
GND
J1
PROG
VCC_PROG
PROG_con
J2
VCC
Schottky
D1
R5
10K
R1
47K
R3
R4
EN
RES
REST
ADC
CH_PD
GPIO16
GPIO14
GPIO12
GPIO13
ESP-07S
U6
TXD
RXD
GPIO5
GPIO4
GPIO0
GPIO2
GPIO15
Temp
R7
R6
or RT9013
MIC5219-3.3
IN
EN
OUT
BP
U1
C1
C2
C3
2.2uf
470p
do not solder 470p for RT9013
TP4056-shield-6PIN
IN+
IN-
OUT+
OUT-
B+
B-
U3
SW_SPDT
SW1
R2
4.7k
U4
DQ
GND VDD
DS18B20