0.3 ohms for Rsense should give 300mA max current

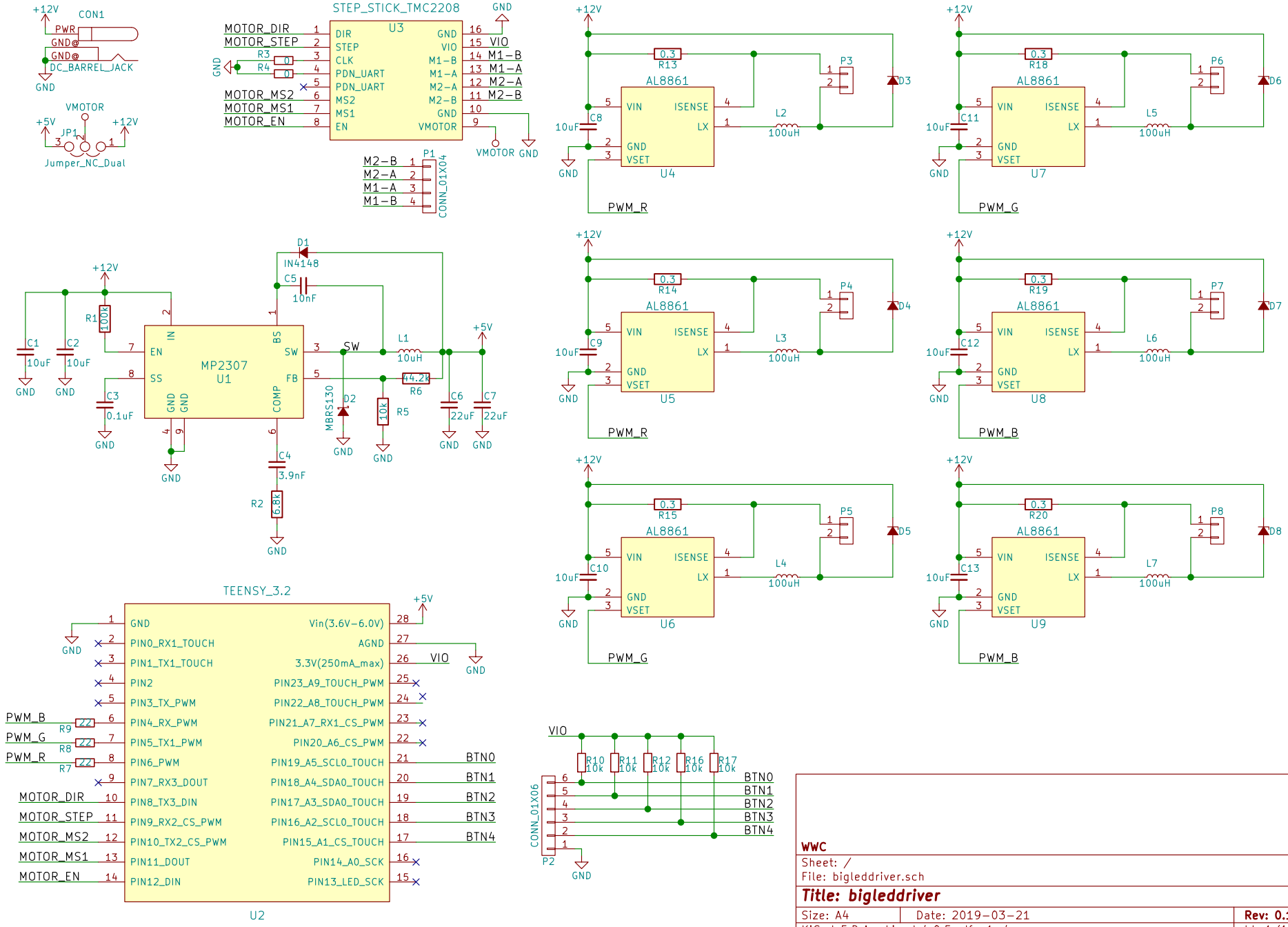


**WWC**

Sheet: /

File: bigleddriver.sch

**Title: bigleddriver**

| | | |
|---|---|---|
| Size: A4 | Date: 2019-03-21 | Rev: 0.1 |
| KiCad E.D.A. kicad 4.0.5+dfsg1-4 | | Id: 1/1 |