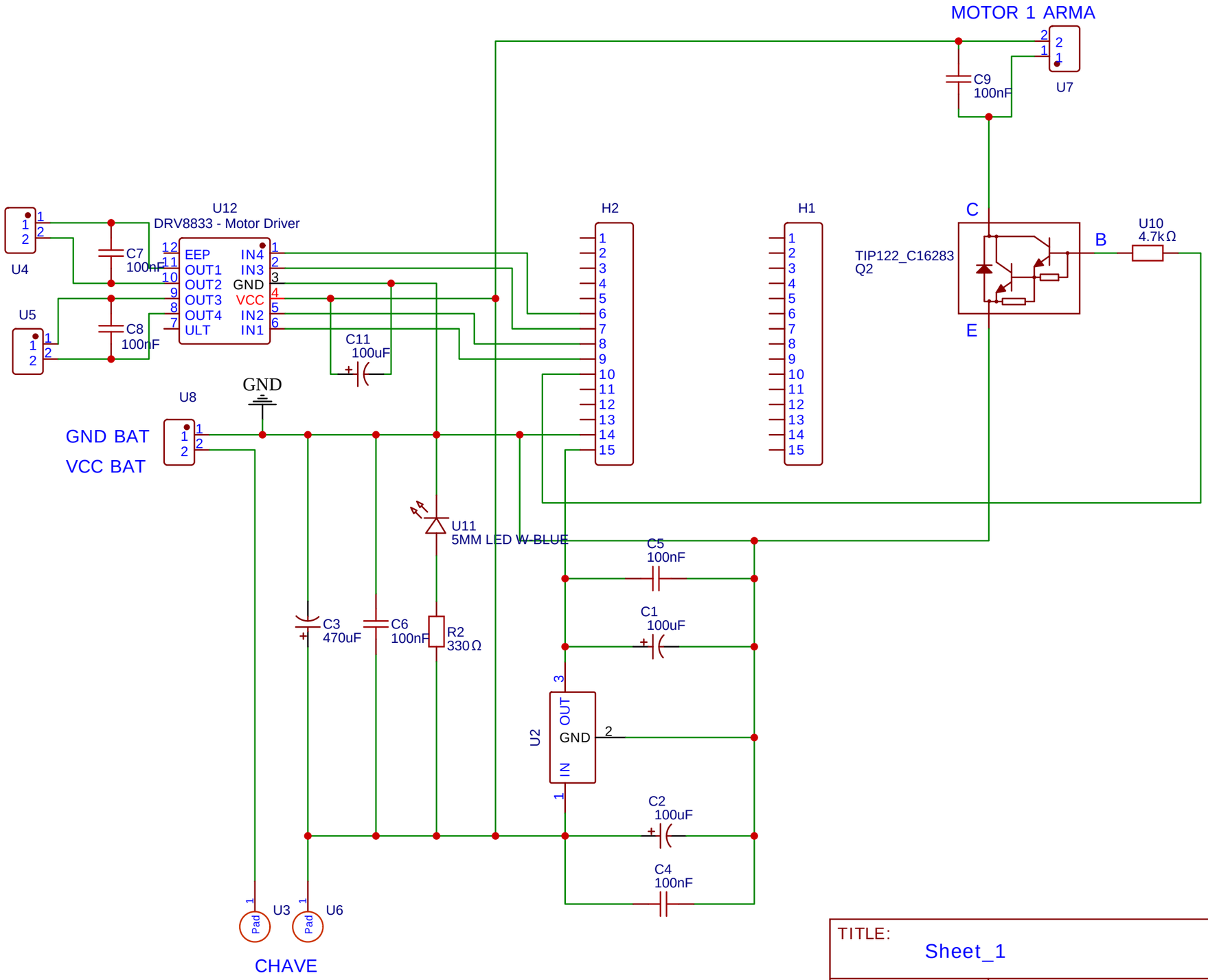

TITLE: Sheet_1		REV: 1.0
EasyEDA	Company: Your Company	Sheet: 1/1
	Date: 2024-02-22 Drawn By: start_robotica	