FEDERAL AGENCY OF RAILWAY'S TRANSPORT

Federal State Budgetary Educational Institution of Higher Education

«Petersburg State Transport University of Emperor Alexander I»

Faculty of «Transport and energy system»
Department of «Railway Rolling Stock»

EXPLANATORY NOTES

of final qualifying work

Hidayati Nurul

theme *« Development of Bilevel Car for Railway Transport in Republic of Indonesia »*

Student	_____ signature, date	____Hidayati Nurul_____ Surename, name
Head of Department-Chief Manager	_____ signature, date	_Prof. Boronenko Yu.P._ Academic title, Surename
Head of FQW	_____ signature, date	Assoc. Prof. Saidova A.V. Academic title, Surename
Consultants		
	_____ signature, date	Assoc. Prof. Kanonin Yu.N. Academic title, Surename
	_____ signature, date	Assoc. Prof. Baxareva L.A. Academic title, Surename
	_____ signature, date	_____ Academic title, Surename
Нормоcontroller	_____ signature, date	Assoc. Prof. Tanicheva N.A. Academic title, Surename

Saint Petersburg
2021

Introduction.....2

1 Railway's Transport in Indonesia, its condition and parameters.....4

2 Review and Analysis of the Designs of Railway Rolling Stock of The Railways Transport of Indonesia.....7

3 General requirements for the design of a double-deck passenger car..... 32

4 Calculation of the strength of the car body..... 51

5 Stability analysis 75

6. Calculation of frequencies and wave form 85

7 Analysis of materials for thermal insulation and fire extinguishing equipment..86

8 Estimation of the cost of creating a double-deck passenger carriage for the railways of the Republic of Indonesia.....95

Conclusion.....100

Appendix A..... 101

Appendix B..... 103

Appendix C..... 105

Appendix D..... 106

Introduction

Indonesia is a fourth of the most densely populated country in the world, with thousands islands separated by oceans. Approximately two hundred million people transporting from the most western area to the most eastern area and from the most northern area to the most southern area of Indonesia. If we look deeper, each island has 509 to 780 000 km^2 in wide. Where it needs a lot of transport system to transport people from one place to another. In this case, concerning one of the most convenient transportation system is railway transport.

The first railway line in Indonesia opened in 1867. The railways were gradually expanded by both the state and private companies. The Japanese occupation and the Indonesian War of Independence left Indonesia's railways in a poor condition. A batch of 100 steam locomotives were ordered in 1950, and dieselisation started in 1953. By the 1980s most mainline services had been dieselised. Electric multiple units were obtained from Japan beginning in the 1970s, replacing 60-year-old electric locomotives.

Since the independence era, all mainline railways in Indonesia have been managed by the state. The owners of the private railway were compensated first, but the system was fully nationalised in 1971. Construction of new railway lines has been scarce, and most new construction is concentrated on double- and quad-tracking of existing railway lines. Most of the former tramway lines have been closed, reducing the mileage from about 7000 km to only 3000 km. [1]

Passenger transportation in Indonesia has experienced considerable development in recent years. However, rapid development results in higher-than-ever travel demand. Most passenger transport systems are working at capacity and suffer serious congestion during important holidays (i.e., National Day and Eid al Fitr). The experiences of developed countries demonstrate that it is important to establish a modern passenger transport system to achieve sustainable development. A fundamental requirement for such a system is the inclusion of various transportation modes that compete with each other.

A bilevel programming approach is used to study the strategies of increasing revenue of the railway agency running inside East Kalimantan,Indonesia. Bilevel programming approaches have been used in many studies to tackle a variety of transportation problems, but rarely for railway revenue strategy analysis. In this paper, the upper-level problem of the bilevel programming is to determine optimal pricing, speed, and level-of-service (LOS) strategy that maximizes the revenue of the railway agency. The lower-level problem describes passengers' mode choice behavior under a transportation market with three competing modes: bus, rail, and car.

1 Railway's Transport in Indonesia, its condition and parameters

1.1 Loading Gauge of Indonesian's Railways

The *loading gauge* sets dimensions beyond which no part of the cargo may protrude. These are maximum dimensions in relation to the track centre. The loading gauge thus prescribes the maximum width and height of a wagon or of a cargo, i.e. a container, secured on a wagon. However, in practice, the above-mentioned definitions are applied with due consideration given to basic principles of physics regarding vehicles in movement, most notably in curves where the central part of a vehicle tends to be pushed inwards and the end and corner parts of the vehicle tend to be pushed outwards. This is particularly important when commercial requirements lead to the development of faster rolling stock.

In Asia there is still no definite standard regarding loading gauges, even though most refer to UIC and TSI. As in China it has a standard gauge of 3.40m x 4.80m. Currently, China carries out a lot of railroad construction in Asian and African countries, and uses China's standards for loading gauges. Whereas Japan has a loading gauge size of 3,380m x 4,485m, this dimension allows high-speed double decker Japanese trains to pass. While in South Korea the loading gauge is 3.4m x 4.5m.[6]

In Indonesia, the loading gauge size used is based on the Regulation of the Minister of Constraints of the Republic of Indonesia No. PM.60 of 2012 concerning Technical Requirements for Railway Lines. Where in the PM set free space and building space, see picture.

Free space is the space above the railroad which must always be free from all obstacles and obstructions; this space is reserved for railroad circuit traffic. Building space is a space on the side of the railroad which must always be free from all fixed buildings.

Indonesian loading gauge is shown in figure 1.1.

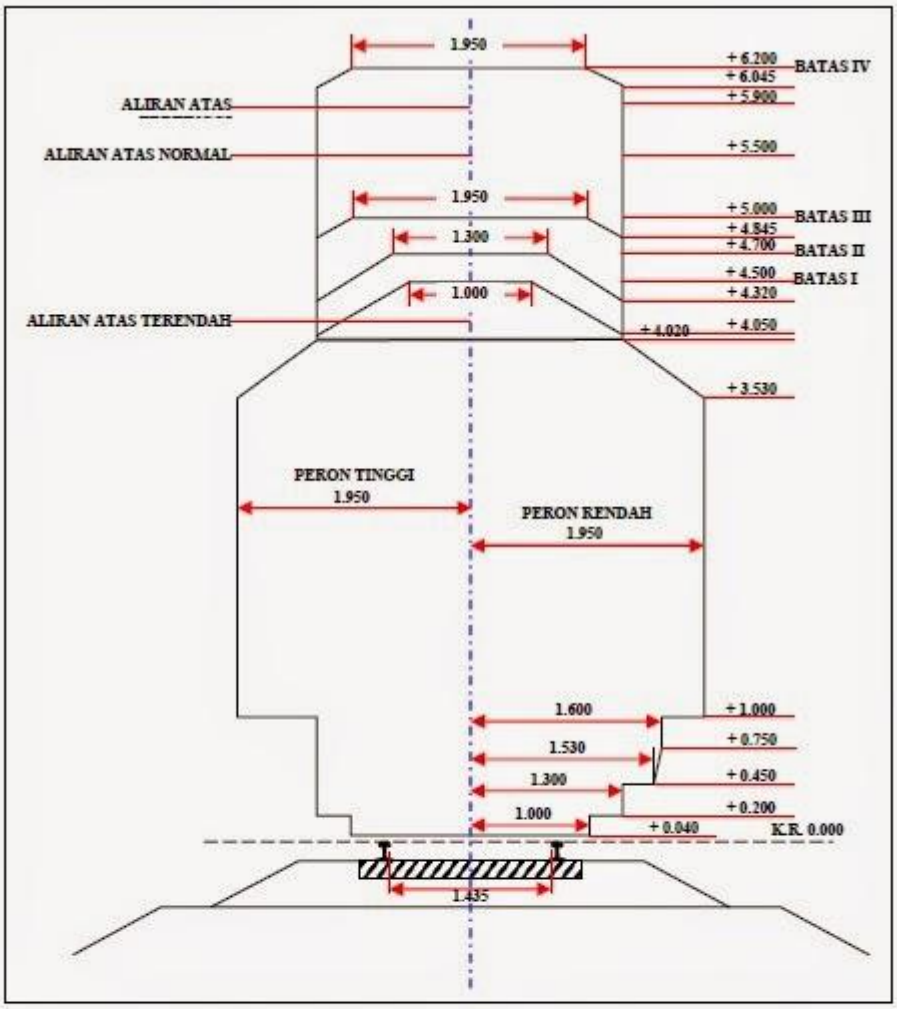

Keterangan :
Batas I = Untuk jembatan dengan kecepatan sampai 60 km/jam
Batas II = Untuk 'Viaduk' dan terowongan dengan kecepatan sampai 60km/jam dan untuk jembatan tanpa pembatasan kecepatan.
Batas III = Untuk 'viaduk' baru dan bangunan lama kecuali terowongan dan jembatan
Batas IV = Untuk lintas kereta listrik
Gambar 1-2 Ruang Bebas Lebar Rel 1435 mm Pada Bagian Lurus

Figure 1.1 - Loading gauge for trains in Indonesia

1.2 Track Gauge of Indonesian's Railways

The majority of **Indonesia's railways** are on Java, used for both passenger and freight transport. There are three noncontinuous railway networks in Sumatra (Aceh and North Sumatra; West Sumatra; South Sumatra and Lampung) with two new networks are being developed in Kalimantan and Sulawesi. Indonesia has finalized its plan for a national railway network recently. According to the plan, 3,200 km of train tracks that will criss-cross the islands of Sumatra, Java, Kalimantan, and Sulawesi, it has been touted as the most extensive railway project in Indonesia since its independence from the Dutch in 1945.

Urban railway exist in form of commuter rail in Jakarta, Bandung, and Surabaya. New mass rapid transit and light rail transitsystem are currently being introduced in Jakarta and Palembang. Despite Indonesia having a left-hand running for roads, most of the railway lines use right-hand running due to Dutch influence. Indonesia's rail gauge is 1,067 mm (3 ft 6 in), although 1,435 mm (4 ft 8 ½ in) and 750 mm (2 ft 5 ½ in) lines previously existed. Newer constructions in Aceh, Kalimantan, and Sulawesi, along with the Jakarta LRT, are using the 1,435 mm gauge. Most of the Jakarta metropolitan area is electrified at 1500 V DC overhead.

Track gauge is shown in figure 2.1

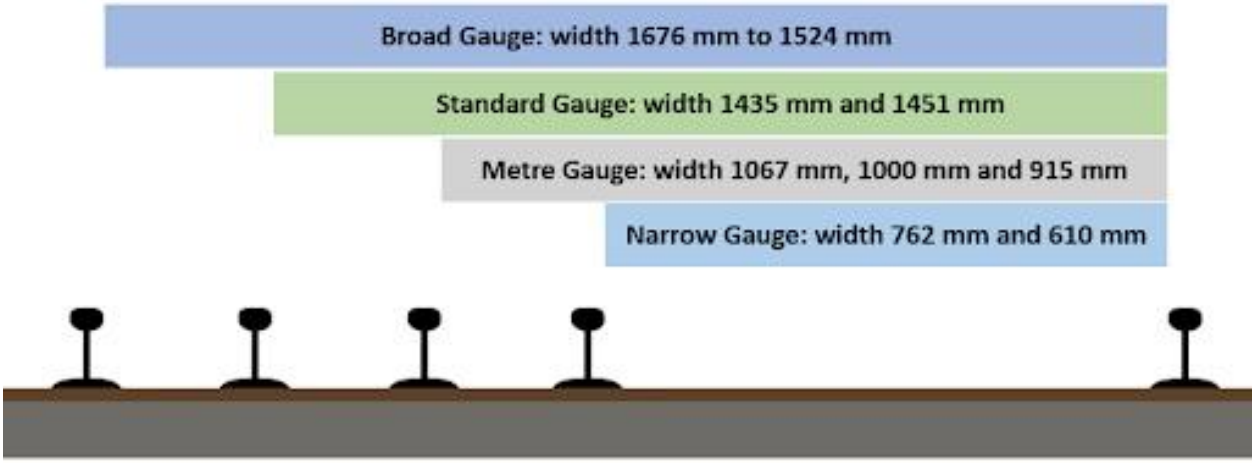

Figure 1.2 - Track gauge

2 Review and Analysis of the Designs of Railway Rolling Stock of The Railways Transport of Indonesia

Among ASEAN countries, Indonesia has many types of cars, especially passenger carts. Indonesia's government emphasizes the growth of the railway transport system of passenger trains due to the fastest growth of civilization.
There are more than 50 types of passenger trains operating under PT.KAI (Kereta Api Indonesia) and more than thousands of carts have been released by PT.INKA (Industry Kereta Api).

a) Third Class Passenger Coach

Indonesian third class passenger car and its interior is shown in figure 2.1 and 2.2. Technical characteristics of the car is shown in table 2.1.

Figure 2.1 - Indonesian third class passenger car

The car body is using monocoque structure made of mild steel. With pneumatic brake and automatic coupler type AAR.

Table 2.1 - Technical characteristics of the third class passenger car

Indicator name	Indicator value
Maximum speed, km/h	120
Axle load, t	14
Length, mm	20920
Width, mm	2990
Height, mm	3610
Bogie type	TB-1014

Figure 2.2 - Interior of third class passenger coach

b) First Class passenger coach

Indonesian first class passenger car and its interior is shown in figure 2.3 and 2.4. Technical characteristics of the car is shown in table 2.2.

Figure 2.3 - First Class Passenger Coach

The car body is using monocoque structure made of mild steel. With pneumatic brake and automatic coupler type AAR.

Table 2.2 - Technical characteristics of the first class passenger coach

Indicator name	Indicator value
Maximum weight, t	84
Maximum speed, km/h	120
Axle load, t	15
Length, mm	20000
Width, mm	3000
Height, mm	3700
Bogie type	TB-1014

Figure 2.4 - Interior of First Class Passenger Coach Equipped with Priority Seat

c) First Class Passenger Coach with Stainless Steel Carbody

Indonesian first class passenger car and its interior is shown in figure 2.5 and 2.6. Technical characteristics of the car is shown in table 2.3.

Figure 2.5 - First Class Passenger Coach with Stainless Steel Carbody

Table 2.3 - Technical characteristics of the First Class passenger car

Indicator name	Indicator value
Maximum speed, km/h	120
Track gauge, mm	1067
Axle load, t	15
Length, mm	20920
Width, mm	2990
Height, mm	3815

a b

Figure 2.6 - Sleeper Car 1st Gen Interior

a) Passenger seat b) Interior of the car

2.1 Analysis of The Body Structure of Passanger Cars in Indonesia

Trains are used to carry passengers, consisting of various constructions and types depending on the transport characteristics, namely short distance, medium distance, and long-distance. The design for short-distance (urban) trains is different from those for long-distance trains (between cities/regencies/provinces). The train design model is made to ensure the safety, security, and comfort of passengers.

The train's size is 20,920 mm long and 2,990 mm wide, which is considered appropriate to arrange four-passenger seats per row plus an aisle for passing traffic. This measure also finds the limit of free space and the smallest rail curve (R). The train's weight is heavier than other vehicles from the passenger unit ratio point of view. To reduce fuel consumption, the interior uses lighter materials such as aluminum and wood.

The train design and construction is made as a single frame unit (monocoque), which means that the roof, walls, and floor of the train are united in a single construction unit.

The inner layers of the walls and floors are coated with fire-resistant materials and heat-resistant insulators to reduce the sun's heat from outside. The windows are made of impact-resistant glass, which, if broken, will shatter into small, non-sharp grains so as not to endanger passengers. In the executive class, even duplex glass has been used, which when broken, the broken glass will still stick to the rubber layer installed in the glass so that the glass does not scatter. Currently, have tried to install glass with polycarbonate material, which is shatterproof, but unfortunately, it is not resistant to scratches caused by careless washing or using a brush with a harsh material.

The shelves for placing goods above the passenger seat are made so that the items that are placed cannot fall, if the train suddenly experiences a shock. The shelf's size is made a little narrow upwards so that passengers cannot put items that are large enough and heavy on the goods shelf because the goods shelf can only be

used to put hand luggage. For large-size and weight goods, a separate luggage train is usually provided, attached to the train.

In some executive classes, the luggage rack can be closed (such as on an airplane), which is only used to store small items (bags, suitcases, etc.), which are considered necessary. In contrast, for larger items, a special room is provided at each end of the passenger room.

Each passenger train is provided with a fire extinguisher in the event of a fire, which is placed in a box under the electric panel at the end of the passenger room. Near the panel, there is also an emergency valve, which is used as an emergency braking in case of a situation that endangers passengers.

Long and medium-distance trains generally have 4 doors located at each end of the train's left and right. Old train design for business and economy class still use 2 doors, while the new design uses 1 door. Each door can be locked from the inside with a special lock-system, but currently, many are damaged and are only closed/blocked by some means to not be forced to open from the outside. Especially for executive class trains, door locks can still function properly.

For security, the door is connected to the board (not directly to the passenger room), while the connection between the dock and the passenger room is added by one more door which can be opened and closed quickly with automatic locking so that it does not shift if the train is suddenly shaken. Some executive class trains have used an automated system with a pneumatic or hydraulic system where the open/close process is done by pressing a button provided near the door. Even a kind of automatic sensor has been installed where the door can open automatically when someone is about to pass.

Business and economy class train windows do not use duplex glass. The window design is divided into 2 leaves where the smaller upper part can be opened upward manually or provided a window crank. The upper window's width is only 1/4 of the entire window's width, while the bottom is 3/4 of the width of the whole window. This is to anticipate criminal acts from outside the train if the window can be opened wide. Executive class trains are made as non-open dead glass. All of

these window types are installed using rubber "seals" meant to prevent leaks if it rains or makes noise while the train is moving.

Because the train design pays attention to comfort, medium and long-distance trains are equipped with toilets placed at both ends of the train, whereas short-distance train designs do not need to be fitted. So the passengers are not disturbed by the smell of the toilet, the passenger room and board are given a partition that can be opened/closed easily. The toilet door is made towards the dock and is tightly closed with a protective rubber layer not to endanger passengers or make loud noises when closed.

The toilet needs water, so a water reservoir is placed above the board, but some trains have a water reservoir below. Water can rise using an automatic pump that will turn on when the water tap is opened and automatically shut down if the water tap is closed. The water reservoir uses a rust-resistant plate material, usually aluminum or copper.

Long-distance trains do not require wide exit/entry gates, but medium and short-distance transport with a high frequency of incoming/outgoing passengers requires wider and more doors. The train must operate day or night, in bright or dark weather that requires lights that can illuminate all parts evenly but are not dazzling. Executive class trains are equipped with special lights for reading. The lamp must be adjustable so that it can be dimmed at bedtime. Business and economy class trains are only equipped with luminescent lamps covered with fiber/plastic material.[7]

Based on PT.INKA documents (DOC. No A-01 / T Dcs / BIM / XI / 2016). 2016. Madiun: PT.INKA (Persero), there are several materials used to make cart bodies. They are:

a) Stainless steel

Concerning corrosion and maintenance, the carriage body is made of stainless steel. There are two types of stainless steel on the carriage:

1) Stainless steel skin body uses stainless steel wall plate, while the carriage frame structure still uses carbon steel.

2) Full stainless steel, namely the use of stainless steel in the structure of the train's frame and body walls.

b) Carbon steel

Train materials from ancient times until now still often use carbon steel in the form of profiles, initially used Bj.37 or St.37. However, in industrial development, using mild steel (mild steel) SS.41, even for certain wagons, SSS.50 is used.

c) Aluminum alloy

Along with the development of technology, rust-resistant and lightweight materials are needed, so aluminum alloys are used for the body of the train. This material has been used in developed countries such as Japan for the new KRL and the Shin Kan Sen Train.

2.1.1 Indonesian Train Body Materials

a) Carbody structure

The material that is used is the corrosion-resistance steel plate construction. The car body structure consists of an underframe, sidewall, end wall, and roof structure. The car body wall layer uses stainless steel material (SUS 304) as per JIS 4305 or equivalent with Russian analogy of steel - 08X18H10.

Chemical and mechanical structures are shown in tables 2.4 and 2.5.

Table 2.4 — Chemical structures of steel type 08X18H10

Indicator name	Elements substance, %
Carbon	maximum 0,08
Silicon	maximum 1,00
Manganese	maximum 2,00
Phosphor	maximum 0,045
Sulfur	maximum 0,03
Chromium	18 - 20
Nickel	8 - 10,5

Table 2.5 — Mechanical structures of steel type 08X18H10

Indicator name	Indicator value
Test strength	minimum 206 N/mm^2
Tensile strength	minimum 520 N/mm^2
Relative extension	minimum 40%

b) Underframe

The stiffener was made of mild steel. The material code is SS 400 (JIS G 3101) or equivalent.

Chemical and mechanical structures are shown in tables 2.6 and 2.7.

Table 2.6 — Chemical structures of steel type Ст4пс

Indicator name	Elements substances, %
Phosphor	maximum 0,50%
Sulfur	maximum 0,50%

Table 2.7 — Mechanical structures of steel type Ст4пс

Indicator name	Indicator value
Test strength	minimum 245 N/mm^2
Tensile strength	400 - 510 N/mm^2
Relative extension	minimum 40%

c. Roof

The roof truss using stainless steel (SUS 201) according to JIS G 4305 or equivalent. Roof sheathing using structural steel (SUS 304) with 1 mm thickness according to JIS G 4305 or equivalent. The roof's outer surface is covered with a fireproof polyurethane resin, with a non-slip finish type.

The general view of the passenger car is shown in Figure 2.7.

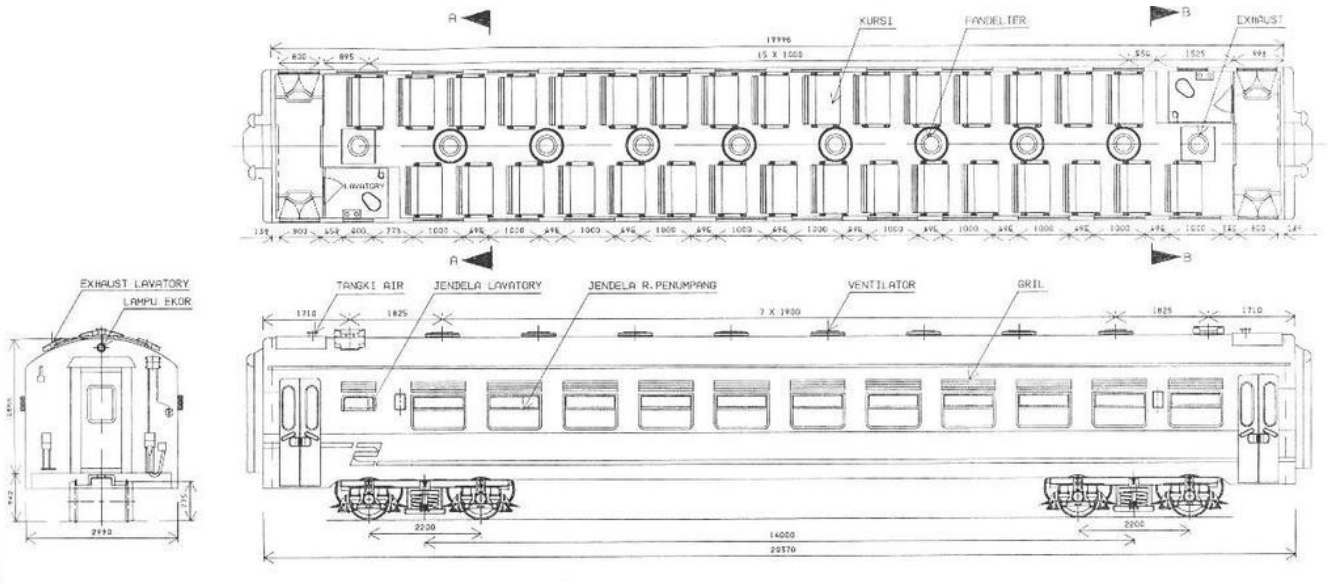

Figure 2.7 - Overview of the design of the passenger car "Third Class"

2.2 Construction analysis of passenger car bogie in Indonesia

Bogie is a construction consisting of two or more wheels joined by a frame equipped with a braking system, with or without propulsion and anti-skid equipment, and the whole functions as a support for the underframe of the train body. The bogie can be removed and reattached when maintenance is needed. Apart from flexibility, the bogie can also dampen the effect caused by the bumpy rails up and down. The bogie center called the "center pivot" will divide that deflection between the 2 wheels. This will cause the train to be more stable even if the rail is uneven / waves up and down. In passenger trains, bogies were created not only for safety but also for increased comfort. That is why the bogie for passenger trains consists of 3 springs that can dampen wheel vibrations and shocks. The market increase in both passengers and cargo railways has led PT Kereta Api Indonesia as a company that manages the Indonesian railway business to consider an improvement in its capacity and services. For specific corridors such as the dense railway traffics Jakarta – Bandung or Jakarta – Cirebon, to answer this market demand, the number of trains should be balanced with the need for new

tracks. On the other hand, there is a customer demand to reduce the time required for covering the travel distance by increasing the train's speed.

Two types of passenger trains, bogie still operate today in Indonesia, and both are the modification of NT-11, an old type bogie from japan.

1. TB 398 (K5)

This bogie train is developing of bogie NT 11 and NT 60. The pedestal bogie type with a swing bar was made by a welded steel frame. The main component are: the bogie frame, wheel device, suspension system, brake instrument, pillar, and the relation of traction energy.[8]

Technical characteristics of TB398 is shown in table 2.8.

Table 2.8 - Technical characteristics TB 398

Track gauge, mm	1067
Maximum axle load, t	14
Distance between wheels, mm	2200
Wheel diameter, mm	774/698
Distance between primary spring centers, mm	1590
Distance between centers of secondary springs, mm	1980
Maximum speed, km / h	100
Weight per bogie, kg	4700
Maximum bogie length, mm	3534
Maximum bogie width, mm	2100
Rail surface height, mm	1000

2.2.1.1 Frame bogie

The frame is a bogie frame with a weld construction of steel plate and side beam consisting of a top plate and a bottom plate with a length of 16 mm and a side plate of 9 mm. The transoms have a cross-section with a plate thickness of 9 mm and 12 mm, and the end beam and the center beam are composed of 9 mm plate and 6 mm plate. The brake system holder bracket is welded to the bogie frame.

2.2.1.2 Wheel device

Each wheel kit consists of an axle and two wheels made of forged carbon steel. The wheel device is a significant component that has direct contact with the track on which the train is based.

2.2.1.3 Axle box

Axleboxes are a component for transferring static and dynamic loads taken by the car to the rotating axles of wheelsets, as well as for limiting the longitudinal and lateral movement of the wheelset when the car is moving.

2.2.1.4 Swing bolster

A swing bolster or swing beam is a component that serves to hold the weight of the carriage through the center plate and side bearer.

The carriage's weight and the load on a bogie are supported by a center pivot and two side bearings. The two side bearings support 16% of the weight when empty. This is intended to reduce the swing motion of the Bogie by torque due to friction resistance.

The swing bars compensate for lateral acceleration due to centrifugal force when passing through the bent rail and the combination of threaded springs and hydraulic dampers reduces vertical vibrations. Bolster guides using synthetic resin liners are attached between the bolster and the bogie frame to transmit forces due

to traction and carriage braking. The Bogie's lateral motion due to the swinging motion of the swing is limited to 40 mm by the rubber stopper.

2.2.1.5 Suspension system

To reduce vibrations on the Bogie TB-398, the Bogie is equipped with two springs: the primary spring is called the support screw spring, and the secondary spring is also called the swing screw spring.

a) Primary springs/support thread springs/journal spring

It is a sealing system arranged on the axlebox and at the base of screw springs fitted with adhesive rubber, which is intended to reduce noise and high-frequency vibrations arising from the irregularity of the rail.

Technical characteristics of primary springs is shown in table 2.9

Table 2.9 - Primary Spring Size

No.	Indicator name	Indicator value
1	Material diameter, mm	30 mm
2	Thread diameter, mm	150 mm
3	Straight length, mm	3297 mm
4	Thread direction	right
5	Number of threads	7
6	Effective thread	5.5
7	Spring constant	43.6 kg

b) Secondary springs/swing thread springs / bolster springs

It is a spring system between the train body and the bogie frame. This spring has a spring constant of 48.5 kg / mm. Secondary compression plays a vital role in determining the quality of comfort in passenger trains. Therefore the secondary compression system is also equipped with shock absorbers in both vertical and lateral directions.

The characteristics of the primary spring are shown in table 2.9.

Table 3.2 - Secondary Spring Size

NO	**Name**	**K1/KM**		**K2/K3**		**BP**	
		EXTERNAL SPRING	INTERNAL SPRING	EXTERNAL SPRING	INTERNAL SPRING	EXTERNAL SPRING	INTERNAL SPRING
1	Inner diameter (mm)	Ø 35	Ø 23	Ø 35	Ø 23	Ø 35	Ø 23
2	Outer diameter (mm)	Ø 261	Ø 163	Ø 261	Ø 163	Ø 261	Ø 163
3	Straight length (mm)	4542	3842	3726	3297	4357	3648
4	Thread direction	Right	Left	Right	Left	Right	Left

5	Number of threads	6,40	8,74	5,25	7,50	6,14	8,30
6	Useful thread	4,90	7,24	3,75	6,00	4,64	6,80
7	Constants (kg / mm)	26,52	14,09	32,50	16,00	28,00	15,00
		40,61		48,50		43,00	

K1 - Trains equipped with executive class passenger facilities

K2 - Trains equipped with business class passenger facilities

K3 - Trains equipped with economy class passenger facilities

KM - Dining train / restaurant train

BP - Luggage cart

2.2.1.6 Braking system

The clamp-type bogie braking system provides the braking force to each wheel by two brake blocks arranged on either side of the wheel. The brake block made of cast iron is held by a peg (pinprick) on its back. The allowance between the brake beam and the wheel arch is adjusted by approximately 8 mm, and the automatic slack adjuster on the base frame compensates for brake block wear so that allowance is maintained.

All joints use hardened bushes and pins, which must be replaced with new ones when they reach their bounds [9].

General view of the TB 398 cart is shown in figure 2.8.

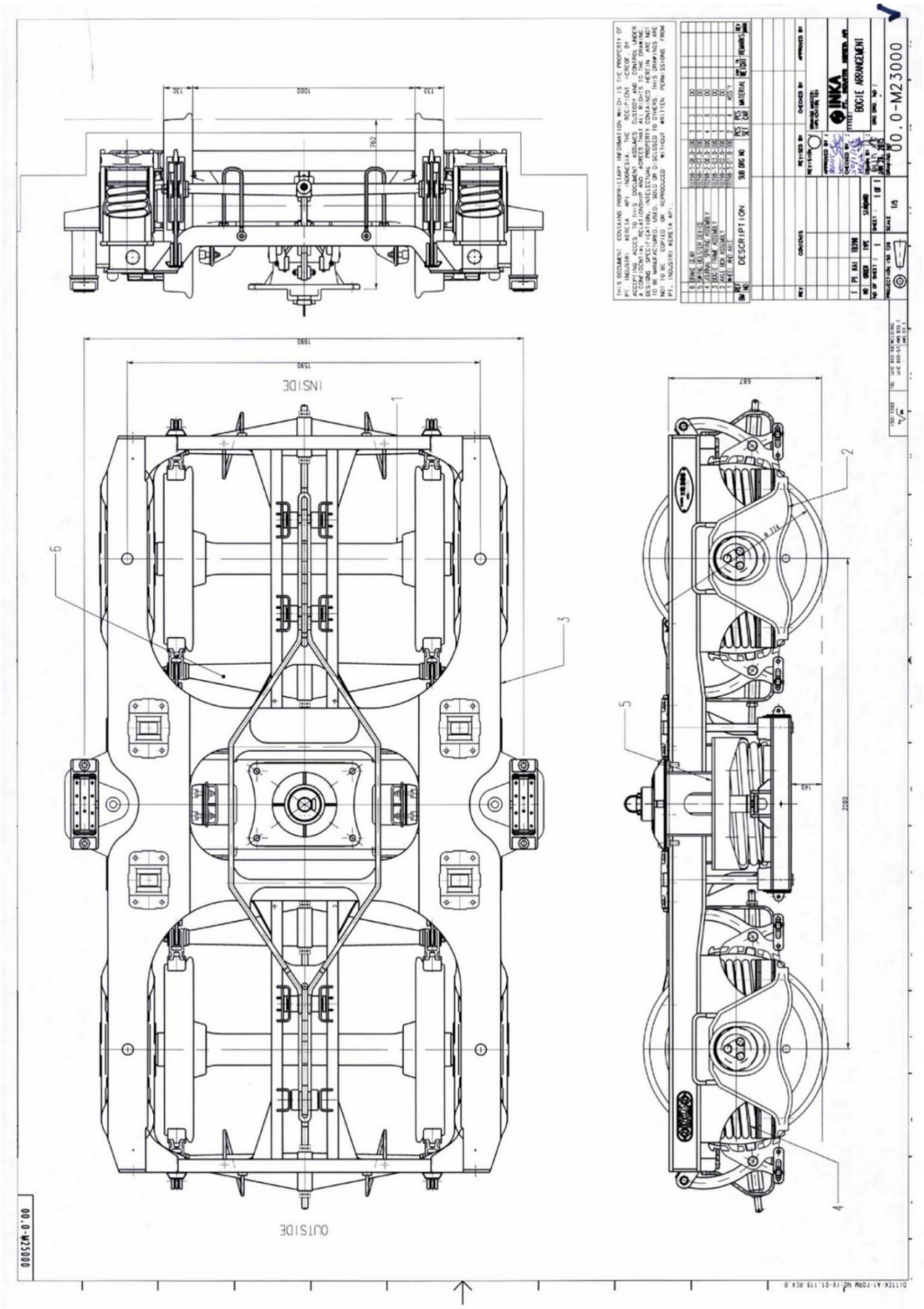

Figure 2.8 - Overview of the bogie TB 398

2.2.2 TB 1014 (K10)

TB-1014 is the newest unmovable train bogie in Indonesia. This bogie is also known as K10 and is a modification of the previous generation bogie, TB 398. Bogie application for trains with a track gauge of 1067 mm and a maximum operating speed of 120 km / h.

Technical characteristics of bogie TB-1014 is shown in the table 2.12.

Table 2.12 - Technical characteristics of bogie TB-1014

Track gauge, mm	1067
Wheel base, mm	2200
Distance between journal centers, mm	1590
New wheel diameter, mm	774
Maximum bogie length, mm	3640
Maximum weight per bogie, kg	4500
Maximum axle load, ton	14

Assembled bogie TB-1014 is shown in figure 2.9

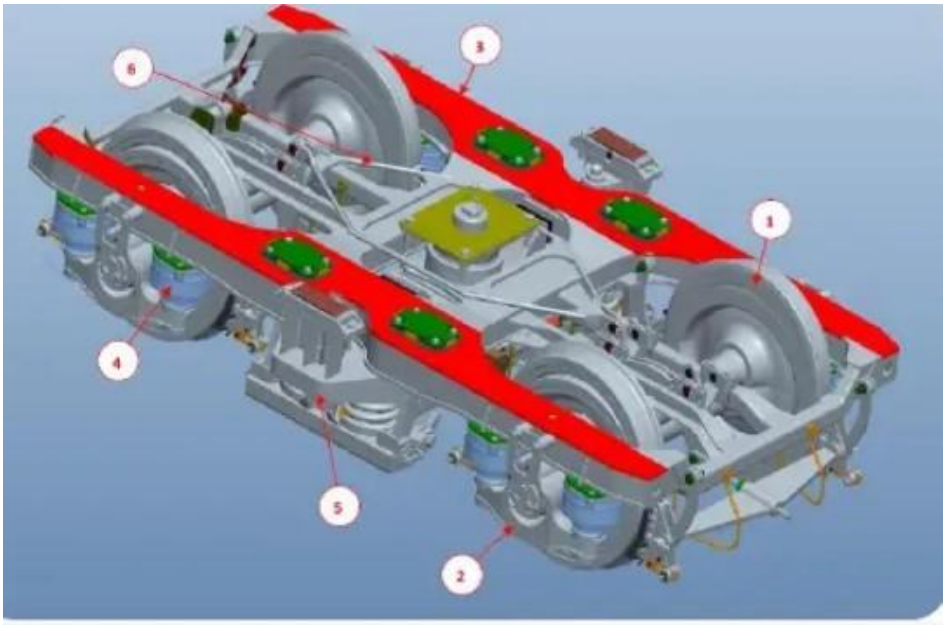

Figure 2.9 - Assembled bogie TB-1014

The specification of the part of the TB 1014 bogie is shown in table 2.13.

Table 2.13 - Specification of the TB 1014 bogie part

No	Unit	Qty	Unit
1	Wheel set with complete bearing	2	set
2	Axle box assembly	4	set
3	Bogie frame assembly	1	set
4	Primary suspension assembly	4	set
5	Swing bolster device	1	set
6	Brake gear rigging	1	set

2.2.2.1. Wheelset

TB 1014 bogie wheel kit consists of one axle and two wheels.

a) Axle

The axle is made of forged carbon steel SFA 60 B according to JIS E 4502 with the diameter of the journal by the International Standard (AAR Class C).

b) Wheels

They are made of solid wheel type roll forged steel according to JIS E 5402 and has a minimum tensile strength of 790 N / mm2 with a hardness on the outer rim surface of around HB 246 to HB 307, which is equipped with oil injection hole facilities to facilitate easy removal of the wheels from the axles.

General view of the wheelset of the TB 1014 bogie is shown in Figure 2.10.

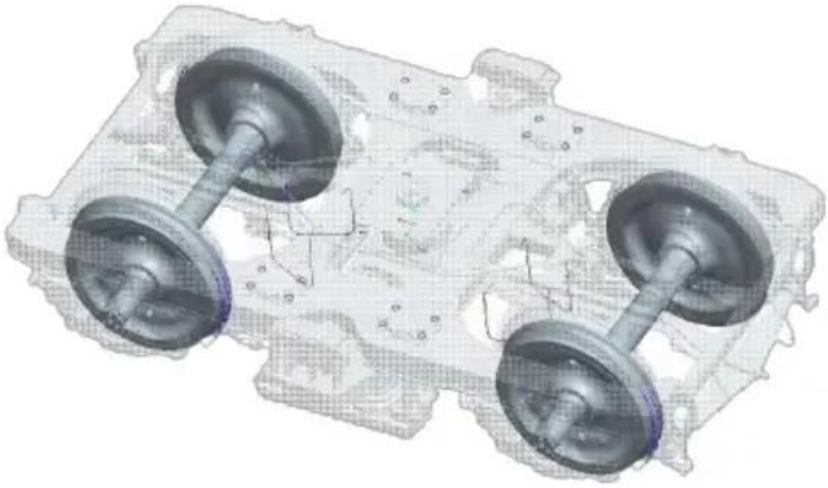

Figure 2.10 - Wheelset of the TB1014 bogie

c) Bearings

This bearing is used without lubrication in the field (Non-Field Lubrication) with a size according to the standard AAR class C 5 "X 9".

The general view of the wheelset with bearings is shown in Figure 2.11 and its specification is shown in table 2.14.

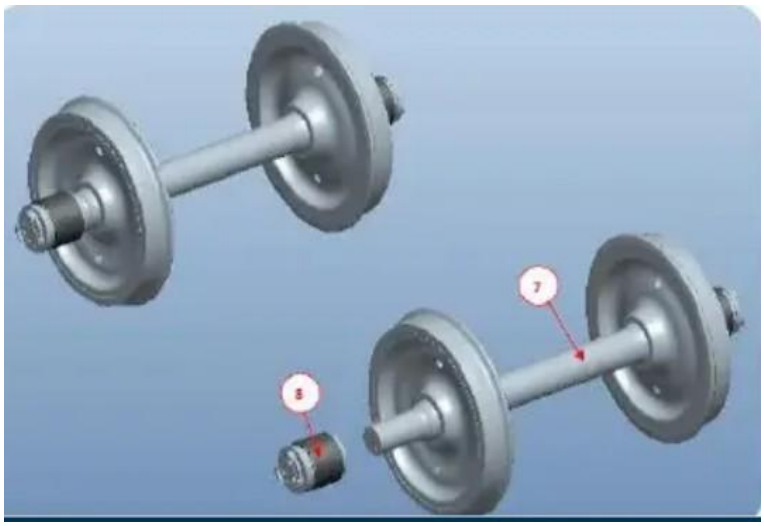

Figure 2.11 - Overview of a wheelset with bearings

Table 2.14 - Wheelset specification

No	Unit	Qty	Unit
7	Wheel set	2	set
8	Journal roller bearing class C	4	set

General view and technical characteristics of the bearing unit Class C 5 "x 9" are shown in figure 2.12 and are given in table 2.15.

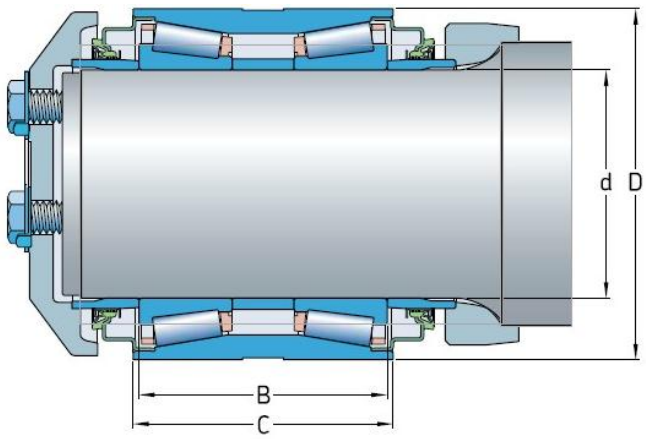

Figure 2.12 - Overview of C 5 "x 9" AAR Bearing

Table 2.15 - Bearing specifications

No	Name	Indicator
1	Bearing type	Class C 5 x 9
2	Inner diameter, mm	119,088
3	Outer diameter, mm	195,263
4	Product name	SKF
5	Additional information	Tapered axlebox bearing unit TBU, inch series

2.2.2.2 Primary Suspension

The suspension system is an important element of the running gear, on which the smoothness of the movement depends on the movement of the car. The elastic elements used on the trolley TB 1014 are conical rubber suspension.

A general view of the primary suspension springs is shown in Figures 2.12 and 2.13.

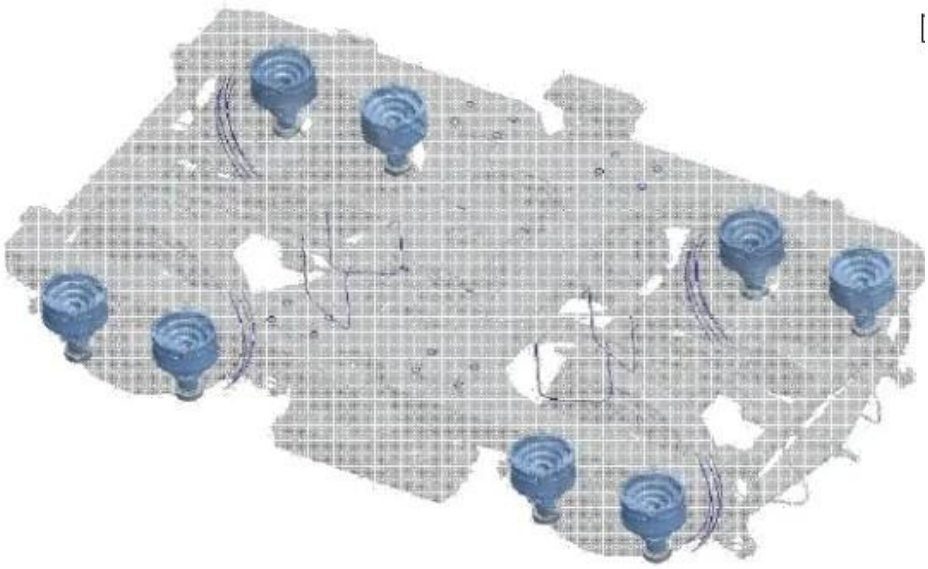

Figure 2.13 - Primary spring suspension

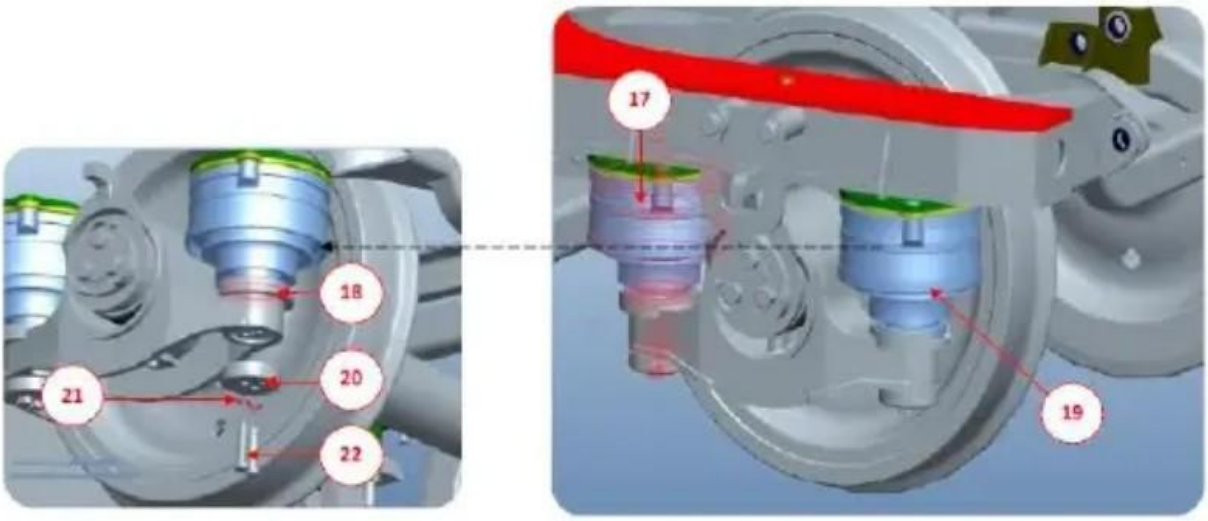

Figure 2.14 - Designation of the primary spring suspension

Spring suspension specifications are shown in table 2.16.

Table 2.16 - Suspension specification

No	Unit	Qty	Unit
17	Conical bonded rubber spring	8	pcs
18	Liner bonded	8	pcs
19	Adjusting liner	8	pcs
20	Retainer plate	8	pcs
21	Spring washer M16	16	pcs
22	Bolt M16x80	16	pcs

2.2.2.3 Bogie frame

The bogie frame is made of steel plate construction that is welded from SS400 soft steel according to the JIS G 3101 standard. The bogie frame has high strength and stiffness against loading without permanent deformation. The frame material has a minimum tensile strength of 400 N/mm^2 and a yield point of 216-245 N/mm^2.

General view of the TB 1014 bogie frame is shown in figure 2.15 and its specification is shown in table 2.17.

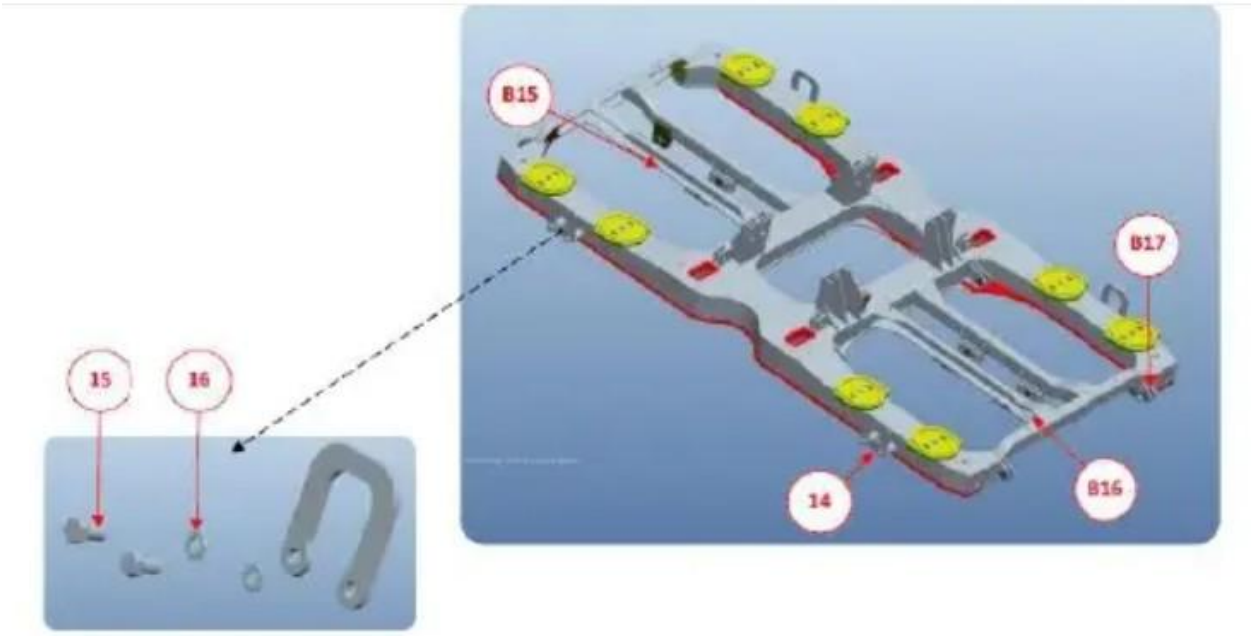

Figure 2.15 - TB1014 bogie frame

Table 2.17 - Specification of the bogie frame

No	Unit	Qty	Unit
14	Hangger	4	pcs
15	Bolt M20 x 40	8	pcs
16	Spring washer M20	8	pcs

2.2.2.4 Swing bolster device

The bolster is an intermediate structure that carries the load between the bogie frame and the main frame of the rolling stock. It perceives the load of the car body frame on the bogie and rail.

An overview of the bolster of the TV 1014 bogie is shown in figure 2.1.

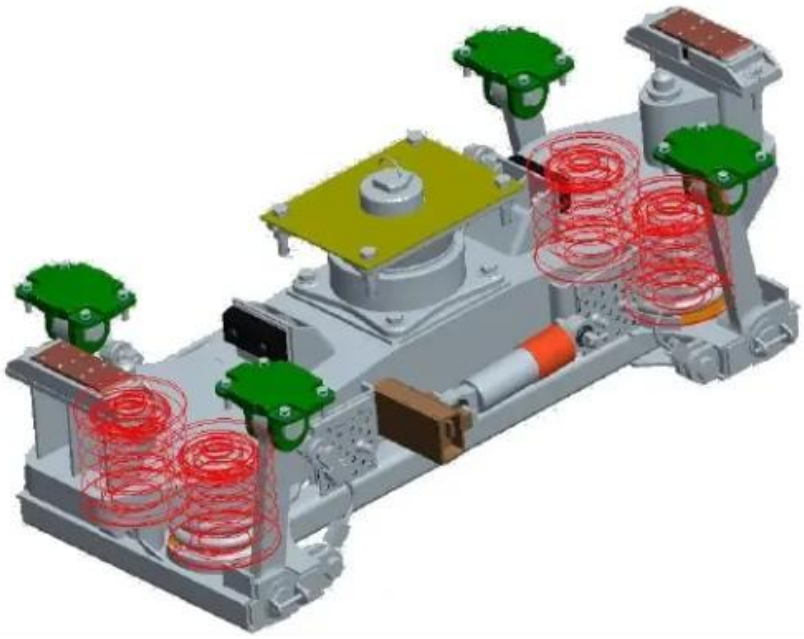

Figure 2.16 - Overview and assembly of bolster parts

General view of the TV1014 trolley is shown in figure 2.17

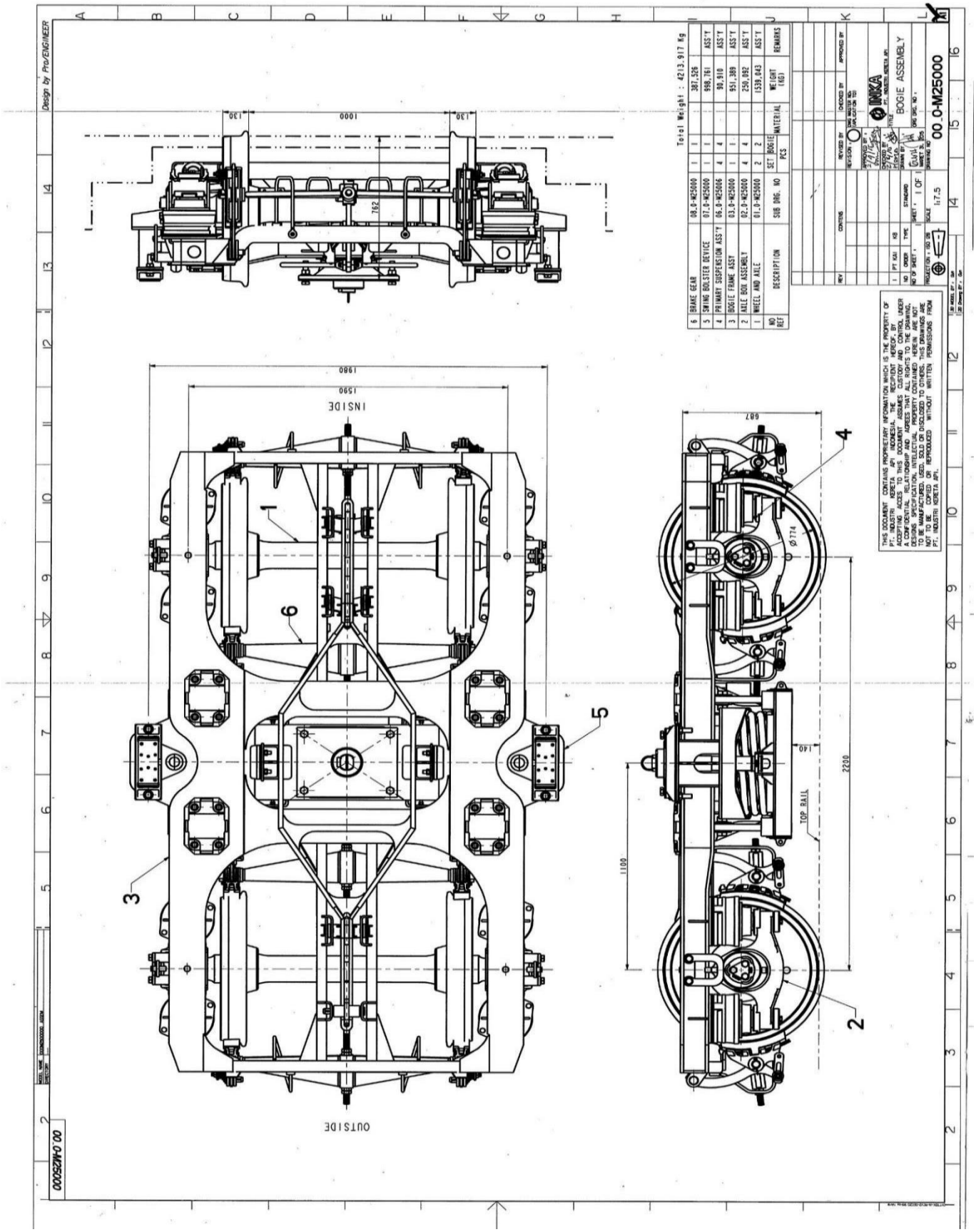

Figure 2.17 - Overview of the bogie TB 1014

3 General requirements for the design of a double-deck passenger car

3.1 Requirements for car body

Since the earliest days of railways, carbody structures have evolved and become considerably stronger, lighter and more economic. As mentioned previously, the earliest carriages were largely of wooden construction. These proved to have a very low crash resistance when accidents occurred with a high rate of injury and loss of life. As early as 1840, in the UK, the Railway Inspectorate was set up to inspect newly constructed railways and to certify fitness for public travel.

Various accidents investigated by the Inspectorate over the years have led to progressively higher standards being set for the design of rolling stock. The first stage was to introduce a wrought iron and later steel underframe which fully supported the wooden superstructure. This system lasted well and was still being used in new stock up to the 1950's. The main drawback was that all the strength was in the chassis which performed well in collisions but body work splintered, still causing much loss of life and physical injury. The next stage was the use of a steel underframe with steel or aluminium framing to the superstructure. This performed much better in crashes but the whole design was getting very heavy and expensive. Modern cars and coaches are designed on the 'Monocoque' principle.

In this case the whole structure is designed as a single monolithic unit, spanning between the main bogie supports. The structure then takes all the bending, shear and torsion stresses as an entity. The final form is usually a composite of aluminium extrusions and welded stainless steel with a 'stressed skin'. All loads and stresses are distributed between the various components. The resulting design is considerably lighter than the previous design and is much akin to aircraft structural design. The lighter design coupled with higher stresses and repeated loading means that fatigue considerations become increasingly important.

Summarising, these developments of carbody design over the last almost two centuries are characterised by:

a) Lower mass;

b) Higher stiffness;

c) Higher strength .

These rolling stock characteristics lead to:

a) Lower energy consumption;

b) Greater crashworthiness;

c) Higher passenger comfort;

d) Higher passengerlcarbody mass ratio.

3.1.1 Sandwich panel for car body structure

Sandwich panel - is being widely used in car manufacturing. In them, the sheet structure is continuously reinforced with a layer of lightweight porous or cellular materials (expanded polystyrene, polyurethane foam).

The use of the most suitable structure of load-bearing body elements of modern rolling stock is selected by panel systems. In these structures, loads are taken up by load-bearing panels consisting of inner and outer plates that are joined together to work together. In them, the loads are perceived by load-bearing panels consisting of outer and inner shells, which are connected for joint work with light polystyrene foam fillers.

A sandwich structure is a prefabricated material made up of two thin rigid cladding sheets attached to either side of the material or low density core structure. The separation of the lining with a lightweight core significantly increases the moment in area (and therefore the flexural stiffness) of the material cross-section with only a slight increase in weight.

The elements of the sandwich panel are shown in Figure 3.1.

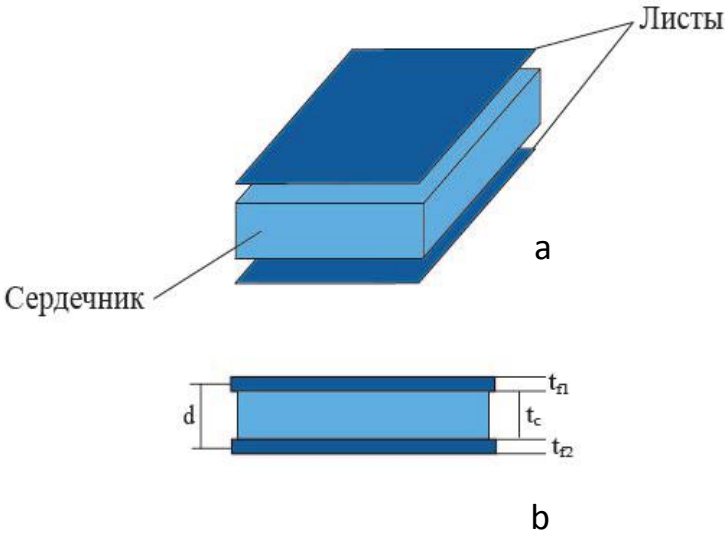

Figure 3.1 - Sandwich panel

a) Sandwich structure elements; b) Side view of sandwich panel

In addition to the “sandwich effect,” sandwich materials also offer other potential benefits, including functional integration, space savings and modular design. The sandwich structure functions similarly to an I-beam in bending, the outer surfaces must withstand compressive and tensile stresses in the same way as the flanges of an I-beam, and the central core withstands most of the shear stresses. To be better explain the mechanical behavior of a sandwich structure, some basic beam bending equations are defined below in accordance with Figure 1, which illustrates a solid beam of length L bent to a radius of curvature r.

An illustration of the sandwich effect is shown in Figure 3.2.

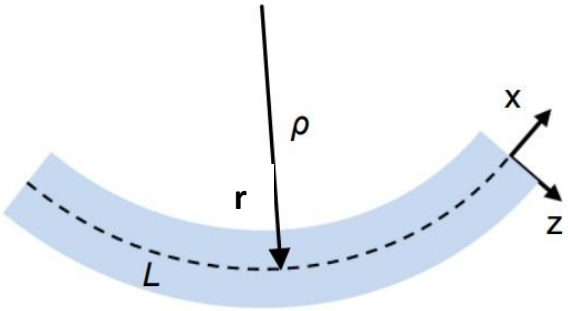

L - beam length, r - radius of curvature

Figure 3.2 - "Sandwich effect"

The stress on the beam is given in the formula (3.1).

$$\varepsilon_x = \frac{\Delta L}{L} = \frac{(\rho+z)\theta-\rho\theta}{\rho\theta} = \frac{z}{\rho}, \quad (3.1)$$

where - θ is the angle defining the arcs of the curved beam at z = 0;

ΔL - change in the length of the arc at a certain coordinate z in the beam.

Forward stress in the beam is determined by Hooke's law is given in formula (3.2).

$$\sigma_x = E.\varepsilon_x = \frac{E.z}{\rho}, \quad (3.2)$$

where E is Young's modulus of elasticity, which in this example is constant throughout the beam.

The moment, Mx, of bending of the beam up to a certain radius of curvature is given in formula (3.3).

$$M_x = \int \sigma_x z dz = \frac{E}{\rho}\int z^2 dA, \quad (3.3)$$

The integral in equation (3.3) is defined as the moment of inertia for the cross section with respect to -y in Figure 2 and is denoted as Iy from that point on.

This gives the following expression for the bending moment:

$$M_x = \frac{E.I_y}{\rho}, \quad (3.4)$$

Combinate the formulas (3.1), (3.2) и (3.4):

$$\sigma_x = \frac{M_x.z}{I_y}, \quad (3.5)$$

$$\varepsilon_x = \frac{M_x.z}{I_y.E}, \quad (3.6)$$

Using the definition of the bending stiffness of the beam as the product of the elastic modulus E and the moment of inertia Iy (3.2):

$$D = EI = E\int z^2 dA, \quad (3.7)$$

The strains and stresses is given in the Formula (3.8) and (3.9).

$$\varepsilon_x = \frac{M_x.z}{D}, \quad (3.8)$$

$$\sigma_x = \frac{M_x.z.E}{D}, \quad (3.9)$$

According to equations (3.8) and (3.9), deformation and stresses change linearly in the z direction over the entire beam with a constant Young's modulus.

The bending of the sandwich structure is shown in figure (3.3).

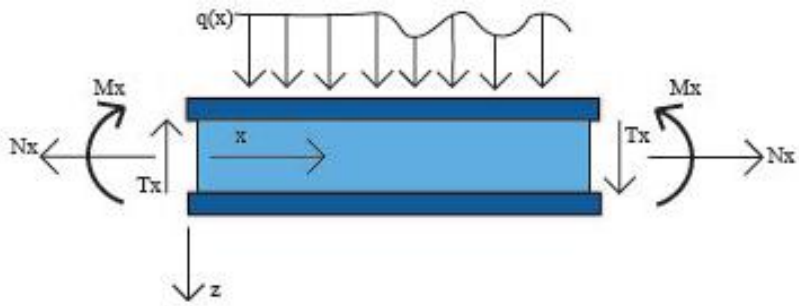

Figure 3.3 - Bending of a sandwich structure z = 0 on the central axis of the beam.

Stresses and strains change when looking at a multi-layer structure. The two faces of the sheet can be compared to two solid beams separated by a core with different modulus of elasticity. In equation (3.7), when calculating the flexural stiffness, the modulus of elasticity must be placed inside the integral, since the modulus changes with respect to z,

$$D = \int E\, z^2 dA, \quad (3.10)$$

Together with the nomenclatures in Figure 3.1, bending in Figure 3.3, and if we admit Ef1 = Ef2 = Ef, tf1 = tf2 = tf, Young's modulus for the core Ec, we can express the stiffness of the sandwich structure by formula (3.11).

$$D = \int E\, z^2 dA = \frac{E_f.t_f^3}{6} + \frac{E_f.t_f.d^2}{2} + \frac{E_c.t_c^3}{12} = 2D_f + D_o + D_c, \quad (3.11)$$

According to Figure 3.1, d = tc + tf. For this case, the flexural stiffness is expressed per unit of length along the y-axis, see Figure 3.3. The first term, on the right-hand side of equation (3.11), represents the flexural stiffness of two surfaces bending about their own central axes. The second term is the stiffness of the

surfaces bent around the central axes of the entire multilayer beam, and the last term is the bending stiffness of the core. Contributions to the total stiffness of the three terms on the right side of equation (3.11), the strength-to-weight ratio is given in Table 3.1.

Table 3.1 - Strength to weight ratio

	1d	2d	4d
	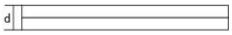		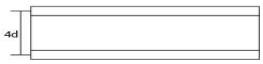
strength	1	~12	~48
weight	1	~1	~1

Flexural stiffness of three different beams. The first picture is a solid beam, while sandwich beams have an end thickness tf = d / 2. This results in the same amount of facing material for each beam. The use of a sandwich panel results in improved rigidity at low weights.

3.1.2 Aluminum sandwich panels

There are an almost endless number of material combinations that can be used in a sandwich system. For optimum stiffness, sheet metal may be suitable for the facing material, however composites can often have a better strength-to-weight ratio. There are also a wide variety of fillers for load-bearing sandwich structures, but in general they can be divided into four main groups: foams, honeycomb fillers, concrete and balsa fillers.

The most important characteristics of a sandwich panel filler are: light weight, its shear modulus, shear strength and stiffness perpendicular to the surfaces. In the graduation project, polystyrene foam is selected for the filler of a sandwich panel system and an aluminum sheet for the facing material. Aluminum sandwich panels have many functions, they are not only an aesthetic element, but also a sound-insulating material and are resistant to mechanical and external influences. Panels made of aluminum materials are also not exposed to the negative effects of UV rays and unfavorable conditions, do not corrode and maintain their presentable appearance and do not require additional painting [18].

3.1.2.1 Adhesive for mounting sandwich panel elements

Modified epoxy resin. One of the most important factors in the production of sandwich structures is the effective application of the adhesive to ensure strength. Adhesive is a component of sandwich panels that must not be disturbed. There are five high-performance types of glue for this.

a) Modified epoxy resin. This is usually the best choice and many formulations are available for different end uses.

b) Vinylphenol. Very strong, with good characteristics, but has disadvantages in pressing.

c) Contact elastomer (rubber base). Satisfactory for non-structural applications, but should be assessed for cold flow or creep as well as moisture and heat resistance.

d) Urethane. Usually used in construction, but has problems with water resistance.

e) Working epoxy from 300 ° F to 350 ° F.

Epoxy adhesive is best applied as thermosetting films and placed between the core and the cladding when the panel components are installed. The initial heating of the press instantly softens the epoxy. As the press continues to heat up, the epoxy hardens to a strong, rigid film that holds the core and liner together. Epoxy resins can be used in liquid or paste form.

3.1.2.2 Aluminum liners for wagon bodies

When choosing a car body shape, the safety requirements for all passengers and train crews in the event of an accident are taken into account. With the aim of reducing the weight of the car, increasing the rigidity of the body, increasing its reliability and durability and ensuring a beautiful appearance, it makes us look for materials that correspond to the constructive and technological solutions. Among the known materials at the present time, the most promising structural materials are aluminum alloys and stainless steel.

And also in recent years, they have recommended in the production and operation of structures made of laminated plastic, reinforced glass and carbon fiber, as well as honeycomb panels made of metal and plastic or multilayer panels. The choice of material for aluminum alloys is different from conventional carbon steels. Aluminum alloys have higher strength at low density, increased corrosion resistance, which is suitable for the weather in all the islands of Indonesia, and they also work well for pressure and cutting.

Aluminum alloys used in light, high-speed rail cars (mainly 5xxx and 6xxx series as in the automotive industry, but also 7xxx series for high strength requirements) have a lower density than steel and excellent formability. and corrosion resistance. The most common alloys for trains are 5083 (according to GOST AMg4 and AMg5), 5059, 5383, 6060 (according to GOST AD31) and newer 6082 (according to GOST AD35) [4].

The chemical composition of types of aluminum is shown in Table 3.2.

Table 3.2 — Chemical compositions of aluminium

No	Name	Chemical compositions, %
1	5056 (ГОСТ АМг5)	Al 93,15 – 96 Mg 3,5 – 4,5 Mn 0,2 – 0,7 Cr 0,05 – 0,25 Be 0,0002 – 0,005 Fe up to 0,5 Si up to 0,4 Zn up to 0,25 Ti up to 0,15 Cu up to 0,1
2	6060 (ГОСТ АД31)	Al 97,68 – 99 Mg 0,35 – 0,8 Si 0,3 – 0,7 Fe up to 0,5 Cu up to 0,1 Zn up to 0,1 B up to 0,06 Cr up to 0,03 Mn up to 0,03
3	6082 (ГОСТ АД35)	Al 95,35 – 98,3 Mg 0,6 – 1,2 Si 0,7 – 1,3 Fe up to 0,5 Cu up to 0,1 Zn up to 0,2 Cr up to 0,25

Continued of table 3.2

		Mn	0,4 – 1
		Ti	up to 0,1
4	- (ГОСТ АМг6)	Al	91,1 – 93,68
		Mg	5,6 – 6,8
		Si	less than 0,4
		Fe	less than 0,4
		Cu	less than 0,1
		Zn	up to 0,2
		Cr	up to 0,25
		Mn	0,5 – 0,8
		Ti	0,02 - 0,1
5	7005 (ГОСТ 1915)	Al	91,19 – 94,65
		Mg	1 – 1,8
		Si	up to 0,35
		Fe	up to 0,4
		Cu	up to 0,1
		Zn	4 - 5
		Cr	0,06 - 0,2
		Mn	0,2 – 0,7
		Ti	0,01 - 0,06

In this work, we choose aluminium series 7000 for body car system. This type of aluminium consisting with zink, magnium, and heat-strenghtened and the most durable among aluminium alloys. Aluminium alloy with this series - 1915T with international analog 7005 or EN AW-7005. 1915T is an excellent corrosion resistance. But with prolonged aging in conditions of solar heating, which causes an aging process, leading the material to over-aging. Due to this action, they are prone to stress corrosion cracking.

Mechanical characteristics of aluminium material 1915T is shown in the table 3.3.

Table 3.3 - Mechanical characteristics of aluminium 1915 T in T = 20°C

Assortment	Size	σ_B	σ_T	δ	Heat treatment
-	mm	MPa	MPa	%	-
Plate, ГОСТ 17232-99		275-315	165-195	10	Hardening and aging

3.1.2.3 Sandwich panel filler

The train insulation system is a very important part in wagons, especially in tropical countries such as Indonesia and other countries in Southeast Asia. Very short weather changes should also be considered. The intensity of solar heat during the day in Indonesia, especially in the East Kalimantan region, has an average temperature of 26-30 ° C. Direct sunlight on the carriage raises the temperatures inside the carriages and makes passengers uncomfortable. Therefore, a coating material is needed as thermal insulation in order to maintain temperatures and humidity inside the cars and increase the comfort of passengers on the way.

There are many types of thermal insulation, but the most famous and have a fairly low coefficient of thermal conductivity - PPU (Polyurethane foam) and expanded polystyrene (Polyfoam). But in order not to increase the load for the cars, thermal insulation with a low density is selected.

Polyurethane foam has a high density of 40 - 80 kg / m ^{3} and a rather low thermal conductivity of 0.032 - 0.042 W / (m ^{2} ^{0} C). And expanded polystyrene offers a low density of 15 - 35 kg / m ^{3} and a rather low thermal conductivity of 0.038 - 0.041 W / (m ^{2} ^{0} C). In the diploma project, he chooses expanded polystyrene / foams for the thermal insulation system, since they have a low density and low thermal conductivity.

The difference in foam production methods:

a) Expanded polystyrene foam - (EPS)

b) Extruded polystyrene foam - (XPS)

In the graduation project is used Extruded polystyrene foam (XPS) as the filler. Extruded polystyrene foam or extrusion is a synthetic material for thermal insulation. Extruded polystyrene foam is manufactured using foaming technology, and polymer compositions are used in the composition. The XPS is pushed through a special shape and joined into a whole piece.

3.1.3 Steel 10Г2Б for body frame

Low-alloy structural steel for welded structures 10Г2Б.

The chemical composition of steel 10Г2Б is shown in Table 3.4.

Table 3.4 - Chemical composition of steel 10Г2В

No.	Chemical composition, %
1	From 0.12
2	Si 0.17 - 0.37
3	Mn 1 1.2 - 1.6
4	Ni up to 0.3
5	S up to 0.04
6	P up to 0.035
7	Cr up to 0.3
8	N up to 0.012
9	Nb 0.02 - 0.05
10	Cu up to 0.3
11	As up to 0.08

The mechanical properties of the steel 10Г2Б at a temperature of 20^0Cis shown in Table 3.5.

Table 3.5 - Mechanical properties of steel 10Г2Б

No.	Mechanical properties	
1	Tensile strength	520 MPa
2	Yield point	375 MPa
3	Relative extension	21%

3.2 Requirements for the running gears of the wagon

For passenger cars are used bogies TV 1014. In the vertical and horizontal indicators of the smoothness of the movement of cars, directions when moving along the railway track with a rating of "good" on the scale of point assessment of the state of the railway track in accordance with the Russian instruction ЦП-515 should be no more than:

3.00 - for general network cars,

2.80 - for high-speed cars,

3.25 - for mail, baggage, mail and baggage and special wagons.

3.3 Requirements for the electrical equipment of the car

The following power supply systems are used in the cars:

a) All wagons in the Republic of Indonesia using a centralized power supply. A generator in a special car provides electricity for other cars.

Centralized trainline from the high voltage DC or AC voltages shown in Table 3.6.

Table 3.6 - Centralized high-voltage train line

Application area	Voltage, V			frequency Hz		
For message wagons by rail	Denomination	The smallest.	The most.	Denomination	The smallest.	The most.
	3000	2000	4000	D.C		
	3000	2200	3600	fifty	48	52

b) Centralized from a three-phase three-wire line with an insulated neutral voltage of 380 V with a deviation of + 10% and a frequency of 50 Hz with a deviation of + 2%; it is used to supply low-voltage consumers directly or through a matching transformer;

c) The generator car is connected to the passenger cars using a junction box. Junction boxes are available in 4 colors: red (R), yellow (S), blue (T), and black (neutral);

d) Each car has 4 junction boxes, which serve to supply currents to the car to turn on the TV, air conditioner, socket, lighting, and slogan light.

3.4 Requirements for water supply and sanitary devices

The carriages use the following water supply systems and sanitary devices:

a) The design of the car should provide for the possibility filling cars with water using sleeves;

b) The wagons must be equipped with sensors with a shut-off valve to limit the filling of the tank, as well as a drain pipe for water in the event of an overflow of the tank;

c) The filling connections must be located on both sides carriage. Their connection heads must be closed to prevent contamination;

d) The quality of water in the tanks and taps of the car must meet the requirements of the sanitary regulations of the Ministry of Transport No. 81 of 2000 for railway transport facilities;

e) The cars must be equipped with closed-type toilet systems in accordance with the requirements of sanitary rules. The design of toilet systems should provide for the possibility of pumping out the storage tank from both sides of the car.

3.5 Ventilation and air conditioning requirements

Ordinance of the Minister of Transport No. PM.17 of 2011 on standards, procedures for the verification and certification of the feasibility of transport,

said that:

a) The temperature in an air-conditioned train is 22-26 °C at a maximum air speed of 0,5 m/s.

b) According to the international standard, it is indicated that if the ambient temperature (Indonesia) is 35°C, the standard temperature in the train room is 23°C, the humidity is 65%, and the air speed does not exceed 0,3 m/s.

c) According to the test results, the air conditioners are manufactured in PT. INKA (Indonesian Railway Industry) type ACI-4001, refrigeration capacity reaches 46876,05 kcal/hour, exceeded the design capacity by 40,000 kcal/hour. This means that the capacity of the air conditioner can withstand cooling loads in excess of the design cooling capacity up to 17,19%.

3.6 Reliability requirements

a) The carriage availability factor must be at least 0,95;

b) The average recovery time for a car in serviceable condition is not more than 6 hours;

c) The assigned service life of a car with a body made of low-carbon and low-alloy steel is 28 years;

d) The assigned service life of a car with a body made of corrosion-resistant materials is 40 years;

e) The average service life of carriage equipment must be at least 20 years.

3.7 Requirements for coupler

The use of an articulated bogie for passenger cars allows to increase the running load and the carrying capacity of the rolling stock, which leads to an increase in the carrying capacity and allows you to load more per meter of train length. Corresponding to this problem, the use of an accurate joint is very important. On the diploma project, the type of assembly of passenger cars FLIRT SBB is used , as in German passenger cars and passenger cars Bombardier Transport . An articulated passenger train is shown in Figure 3.4

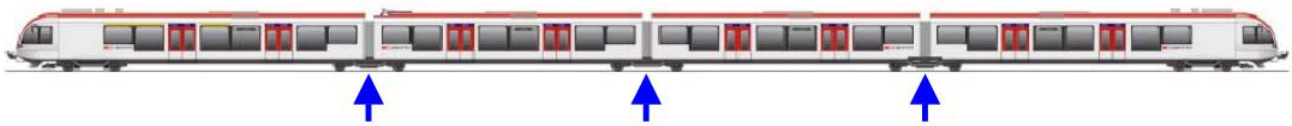

Figure 3.4 - Articulated passenger train FLIRT SBB

The articulated part of such trains places high demands on space, static and dynamic strength of the structure, as well as the ability to move with the lowest possible weight and low overall costs. In addition to its movement function, the hinge provides a tight connection between the bogies. The wagon joint is shown in Figure 3.5.

The joint between the car body is made of aluminum alloys by forging. It has high static and dynamic strength in the heat-treated state, good plasticity and impact strength, AD35 is hardened in relation to corrosion resistance [17].

The design of the joint is shown in Figure 3.5.

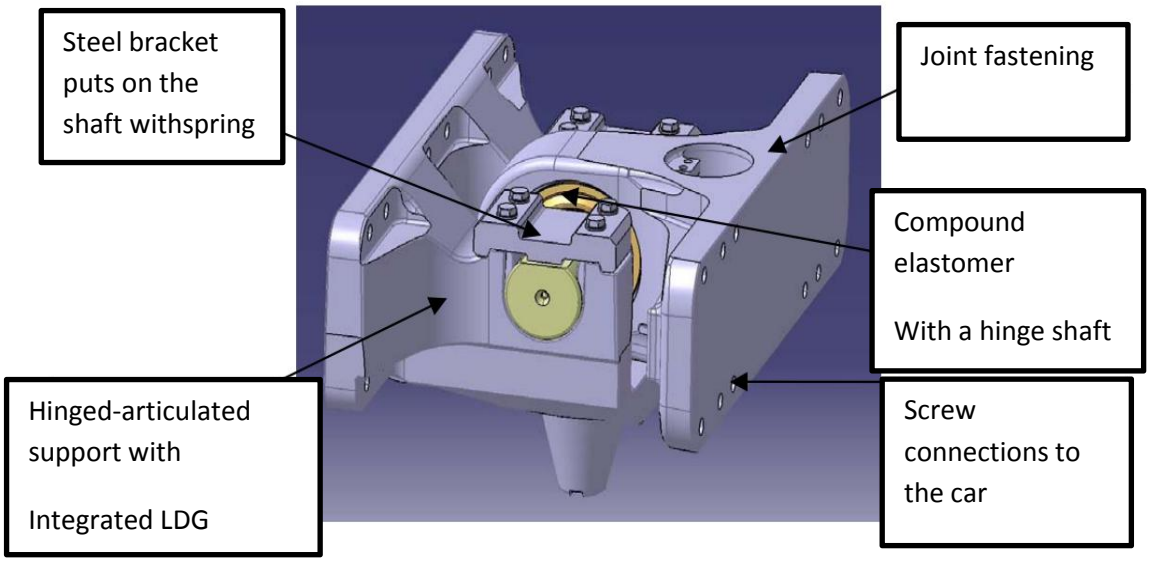

Figure 3.5 - Assembly of a FLIRT articulated wagon; Longitudinal force: 1500 kN, total weight: 223,8 kg

An overview of the joint in the car is shown in Figure 3.6.

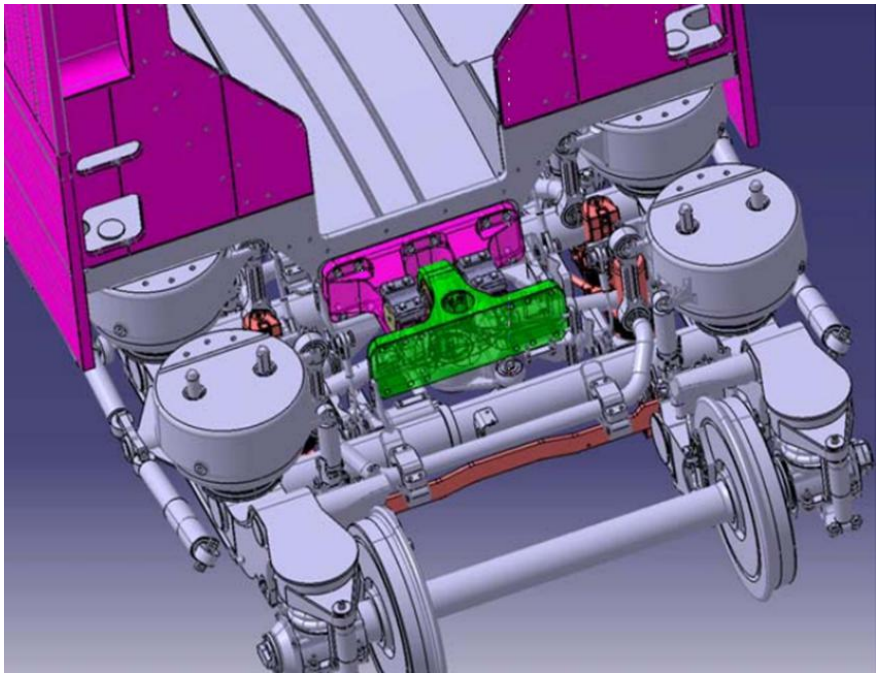

Figure 3.6 - Overview of the joint in the car

An overview of the joint assembly is shown in figure 3.7.

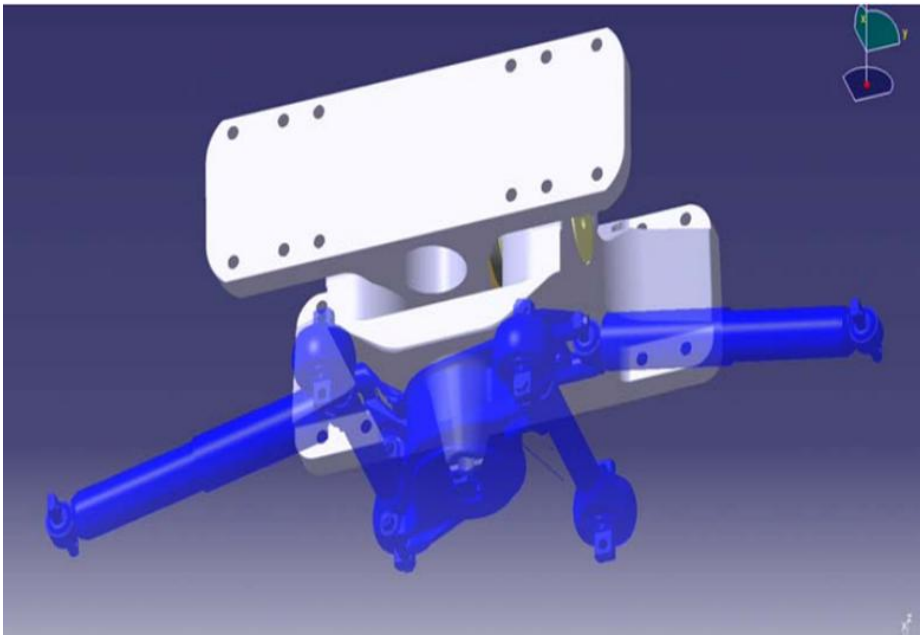

Figure 3.7 - Rotary finger bogie integrated directly into wrought support hinge on which is screwed a fastening plate lemniscate damper transverse and longitudinal arm

The forged blanks of the joint is shown in Figure 3.8.

Figure 3.8 - Forged hinge blanks (left) and hinge supports (right)

The finished joint of the joint assembly is shown in Figures 3.9 and 3.10.

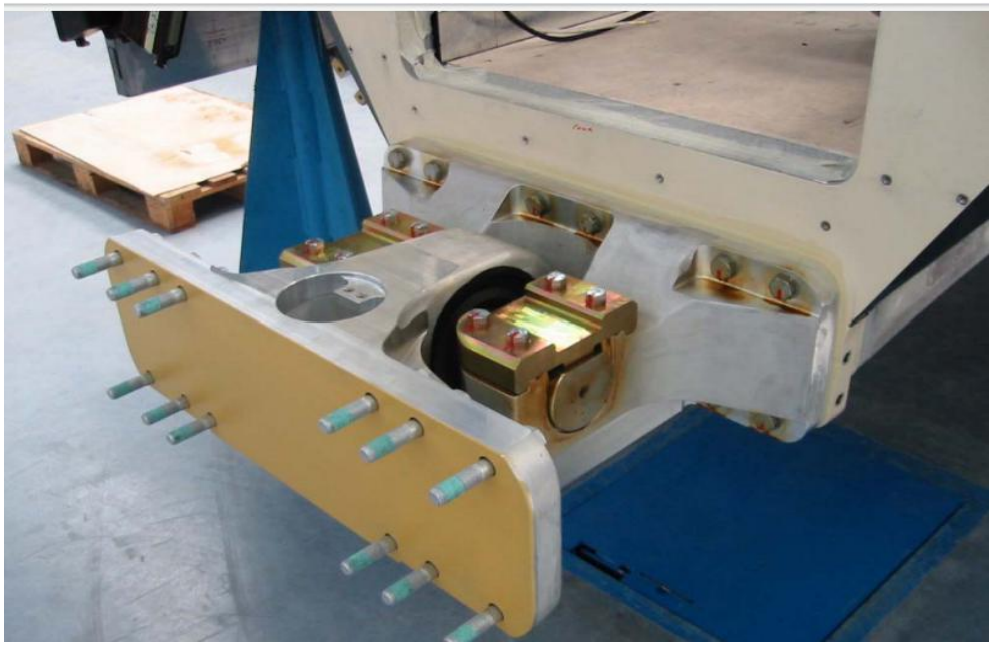

Figure 3.9 - Fully assembled connection module

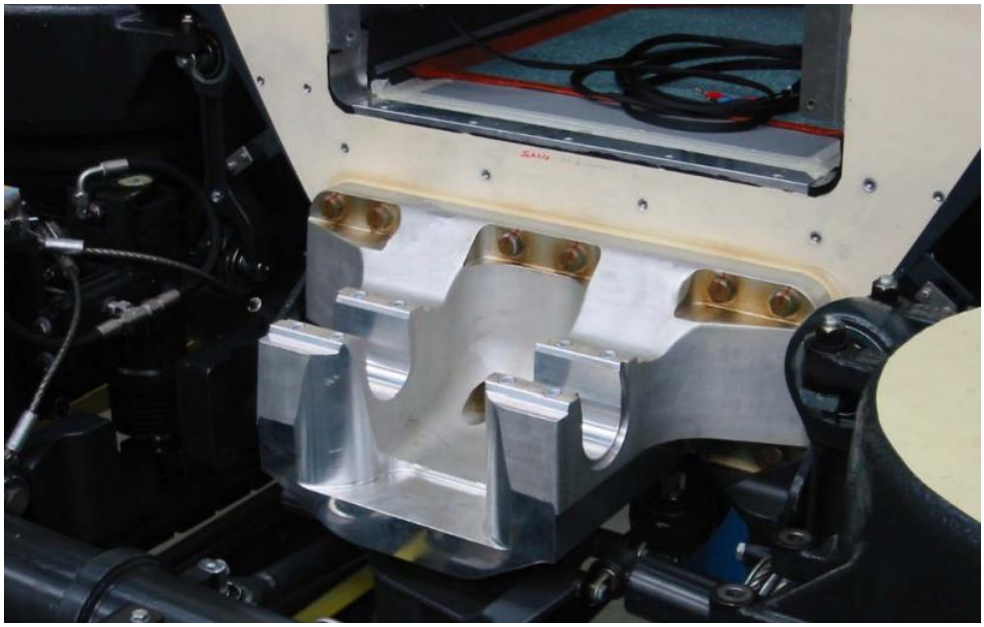

Figure 3.10 - Installing the joint assembly

4 Calculation of the strength of the car body

When calculating the loading of cars and their units in accordance with the Russian standard "Нормм ...", all main forces and additional forces acting on the car are regulated. Loads acting on the car lead to forces that are specified in the right-hand coordinate system, where:

a) The x-axis is directed along the car in the direction of its movement, it corresponds to the hem force P_x ;

b) The y- axis corresponds to the lateral force P_y ;

c) The z axis is directed vertically upwards, it corresponds to the vertical force P_z.

For the calculation and design of cars, two main design modes are established.

I is the main design mode. According to this mode, for passenger cars - the forces arising during maneuvers and accidental collisions, during a collision of cars, as well as during an emergency jolt of a carriage moving as part of a freight train. The main requirement of this mode is to prevent residual deformation in the unit or part of the car under the action of a rather sharp combination of extreme load values.

For mode I, the values of the longitudinal loads when calculating the strength are taken equal to:

a) Under the action of compressive forces, quasi-static forces and forces during shock processes for passenger cars - 2,5 MN.

b) Under the action of tensile forces, the level of quasi-static force and the level of impulsive tensile forces for passenger cars are 1,5 and 2 MN.

The time of action of impulse efforts (impact and jerk) is taken equal to 0,3 s.

III main design mode. In this mode, the forces arising from the movement of the car as part of the train along straight, curved sections of the track and turnouts in operating conditions with an allowable speed up to the design speed with periodic service adjusting brakes, periodic moderate (with a slight change in acceleration) jerks and jerks, Нормal operation correspond mechanisms and

assemblies of freight and passenger cars. The main requirement of the regime is to prevent fatigue destruction of a unit or a car part with a fairly frequent action of possible combinations of moderate loads corresponding to the Hopмal operation of a car during movement. For mode III, the values of longitudinal loads when calculating the strength of passenger cars for tensile and compressive forces, respectively, are taken equal to 1 MN.

When calculating cars for vertical load, it is necessary to take into account the gravity of the car (container), the gravity of the cargo (weight) and the vertical dynamic load arising from vibrations and interaction of cars during train movement and shunting work. In the calculations, the own gravity includes the calculated weight of the items of equipment of the car.

The gravity of the cargo for passenger cars is determined taking into account the mass of passengers with baggage in accordance with the estimated population of the car. In the diploma project, it is taken for the estimated population:

a) Interregional carriage - according to the design number of seats and the number of standing passengers, it is accepted at the rate of 5 people per 1 m^2 of free floor area, and there are aisles and vestibules.

b) For a double-deck carriage - according to the design number of seats and the number of standing passengers, it is taken at the rate of 4 people per 1 m^2 of free floor area

When calculating, the average weight of a passenger with luggage is assumed to be 1 kN (100 kg).

4.1 Materials and allowable stresses

The body of the interregional carriage is manufactured in accordance with the design documentation. The characteristics of the car are shown in Table 4.1.

Table 4.1 - Car characteristics

No.	Parameter name	The quantity
1	Length of the car along the coupling axes of automatic couplers, mm	22500
2	Body length along end walls, mm	21000
3	Carriage base, mm	21000
4	Maximum body width, mm	3205
5	Number of seats in the car, pcs: for passengers for the conductor	 120 1
6	Wagon container (without equipment), ton	9
7	Design speed, km / h	120

Materials used for the body :

a) The body frame elements are made of steel 10G2B and its yield point is equal to $\delta_т$ = 375 MPa. The body frame consists of channels beam, I beam, and a pipe;

b) Body elements are made of a sandwich panel consisting of aluminum sheets 1915T with a thickness of 0,003 m, the yield point is, $\delta_т$ = 165 MPa, material density, ρ = 2700 kg/m^3 , Young's modulus, E = 7 x 10^4 MPa, Poisson's ratio, μ = 0,35;

c) Inside the sandwich panels are made of ПСБ-С expanded polystyrene with a thickness of 0,07 m, material density ρ = 50 kg/m^3 , Young's modulus, E = 10 MPa, Poisson's ratio, μ = 0,38.

d) The weight of one body without equipment and load is equal to G = 9,5 tons.

$G \leq [\ G\ ] = 11$ t.

The car body is made of an all-metal supporting structure. The car body consists of a frame, two side walls, two front walls, two end walls and a roof.

The car frame is made of 10Г2Б steel and consists of a center beam (welded from two-tee and channel bars), has a transition with a distance of 500 mm from the side doors (welded from a pipe) of the car floor, having a closed box

section (welded from a pipe). On the second tier, welded from a pipe to the floor of the carriage and a support for the second floor.

The applicable steel tolerances are as follows:

a) For the first design mode, the permissible stresses for the center and pivot beams of the body frame are taken equal to 0,9 of the yield point of the material, which is 375 MPa, that is, equal to 337,5 MPa.

b) For the third mode, the permissible stresses, for the center and pivot beams of the body frame, are taken to be 230 MPa.

Sandwich panels made of 1915T aluminum sheets and its expanded polystyrene filler are used for the walls and walls of the car. The size of aluminum sheets is 0,003 m and the thickness of expanded polystyrene is 0,07 m.

The applicable tolerances are as follows:

a) For the first design mode, the permissible stresses are taken equal to 170 MPa.

b) For the third mode, the permissible stresses are assumed to be 120 MPa.

In accordance with the recommendations of "Норм...", the calculation is performed by the finite element method, using ANSYS 2019.

In accordance with the recommendations "Норм...." for the calculation, a lamellar-bar finite element model of the car body is used. Rod finite elements of the BEAM188 type were used to describe the body frame, and the SHELL 181 element was used for the wall and roof of the body.

The finite element model includes 7908 finite elements and 8856 nodes. For the calculation, the von mises theory is used , which is provided for by the "Норм ...".

The finite element model was fixed from vertical displacements at the support points of the body, from transverse displacements relative to the track axis, displacements at the intersection points of the center and pivot beams of the frame (the point of position of the pivots of the frame). The finite element model was fixed from longitudinal displacements:

a) when stretched in the end zone of the front stop, and from the opposite end of the car, a longitudinal force is applied to the front stop.

b) during compression in the end zone of the back stop, and from the opposite end of the car, a longitudinal force is applied to the back stop.

4.2 Calculation of the strength of the body in the first and third modes

4.2.1 First test mode in compression

We write down the condition for the strength of the carriage elements in the formula (4.1)

$$\sigma_э \leq [\sigma], (4.1)$$

where is $\sigma_э$ and $[\sigma]$ - equivalent and permissible stress.

According to the I design mode of longitudinal shock loads in combination with other loads, the permissible stresses are assumed to be equal to the yield strength .

In accordance with the "Норм ..." in the first design mode, the following basic design schemes for the application of longitudinal forces are established:

a) a quasistatic compression force (250 ton) is applied to the automatic coupler stops at both ends of the car when the difference in the heights of the couplers of the interacting cars is 0,1 m;

b) the impact force (-250 ton) is applied to the stops of the automatic coupler of one end of the car on a straight section of the track when the difference in heights of the couplers of the interacting cars is equal to 0,1 m.

When calculating the car body for collision with a force of –250 tons, the force is applied to the back stops on one side of the car and is balanced by the inertial forces of the car masses.

When calculating for a collision with a force of –250 tons, in contrast to the calculation for the action of a quasistatic force, the transverse component of the longitudinal quasi-static force is not taken into account (since the interaction of cars occurs on a straight track section), but the vertical component from the action of the longitudinal force of inertia of the car body is additionally taken into account.

In accordance with "Норм ...", in the I test mode, a compressive force of 2,5 MPa was applied.

The body of the car at the I- th design mode in compression is shown in Figure 4.1.

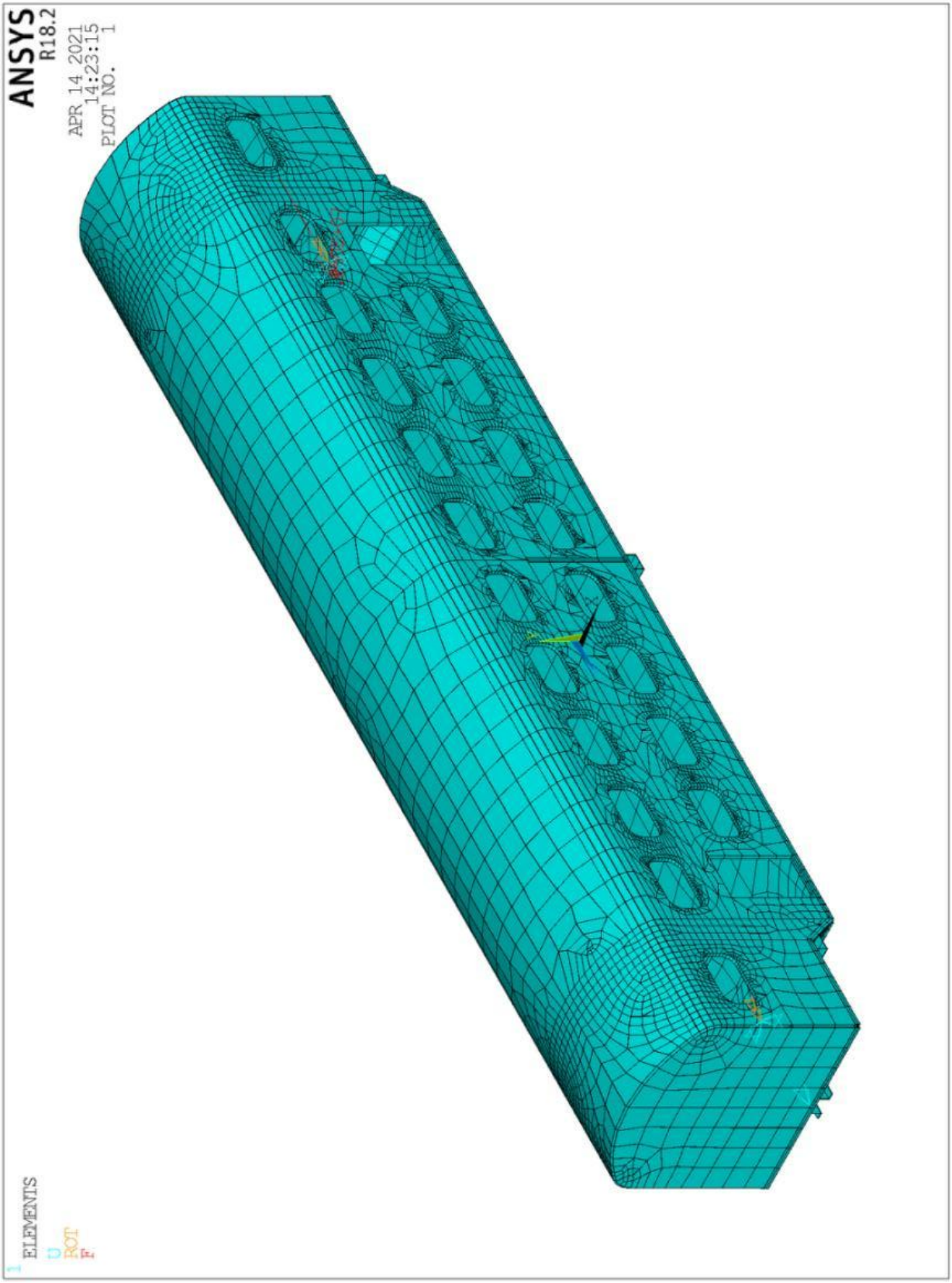

Figure 4.1 - The body of the car at the I design mode in compression

The body of the car at the I design mode in compression according to von mises is shown in Figure 4.2.

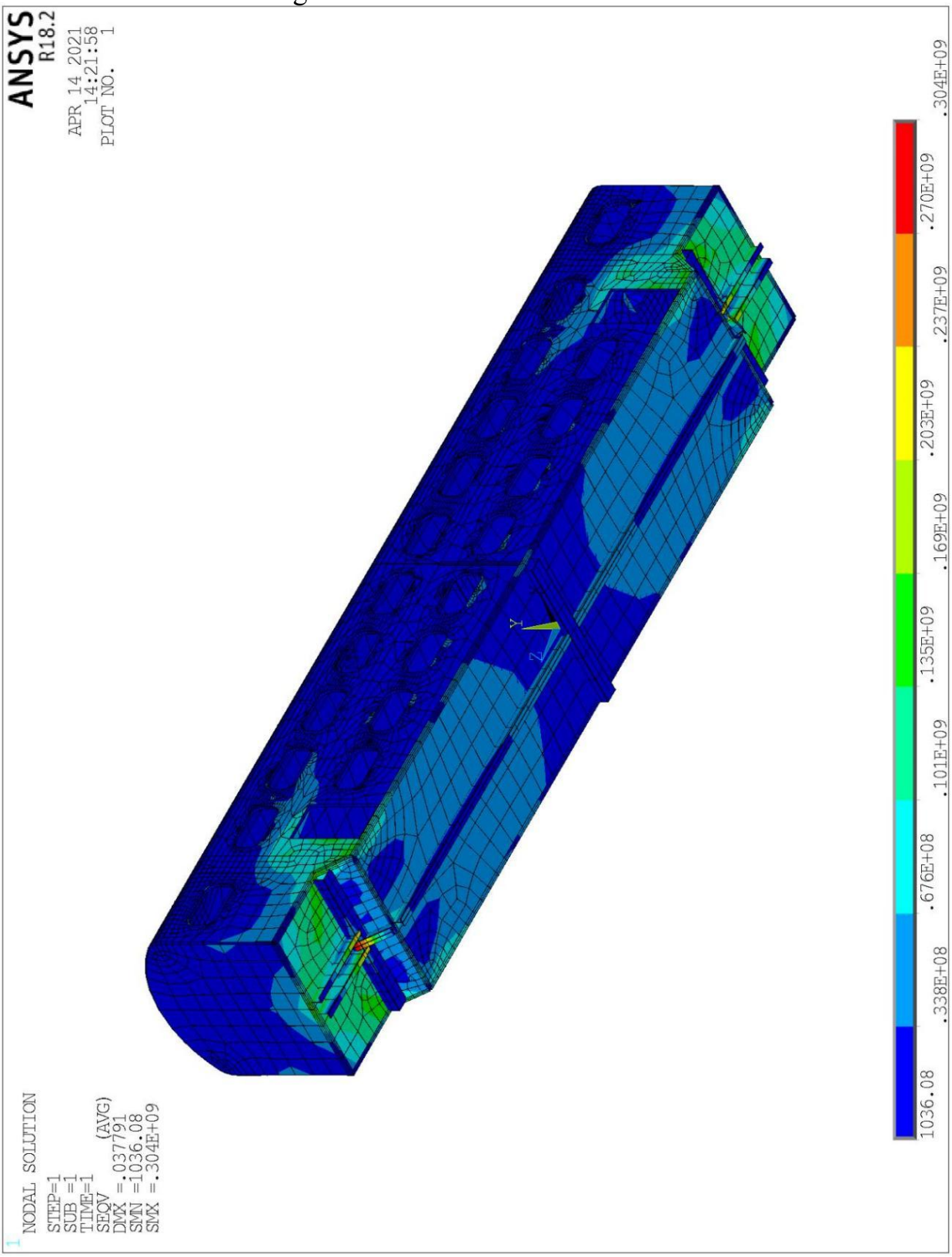

Figure 4.2 - Car body under compression in the I design mode

The maximum stress according to von mises when calculated is $\left[\delta_c\right] = 304$ MPa.

The maximum stress at the I design mode in compression is shown in Figure 4.3.

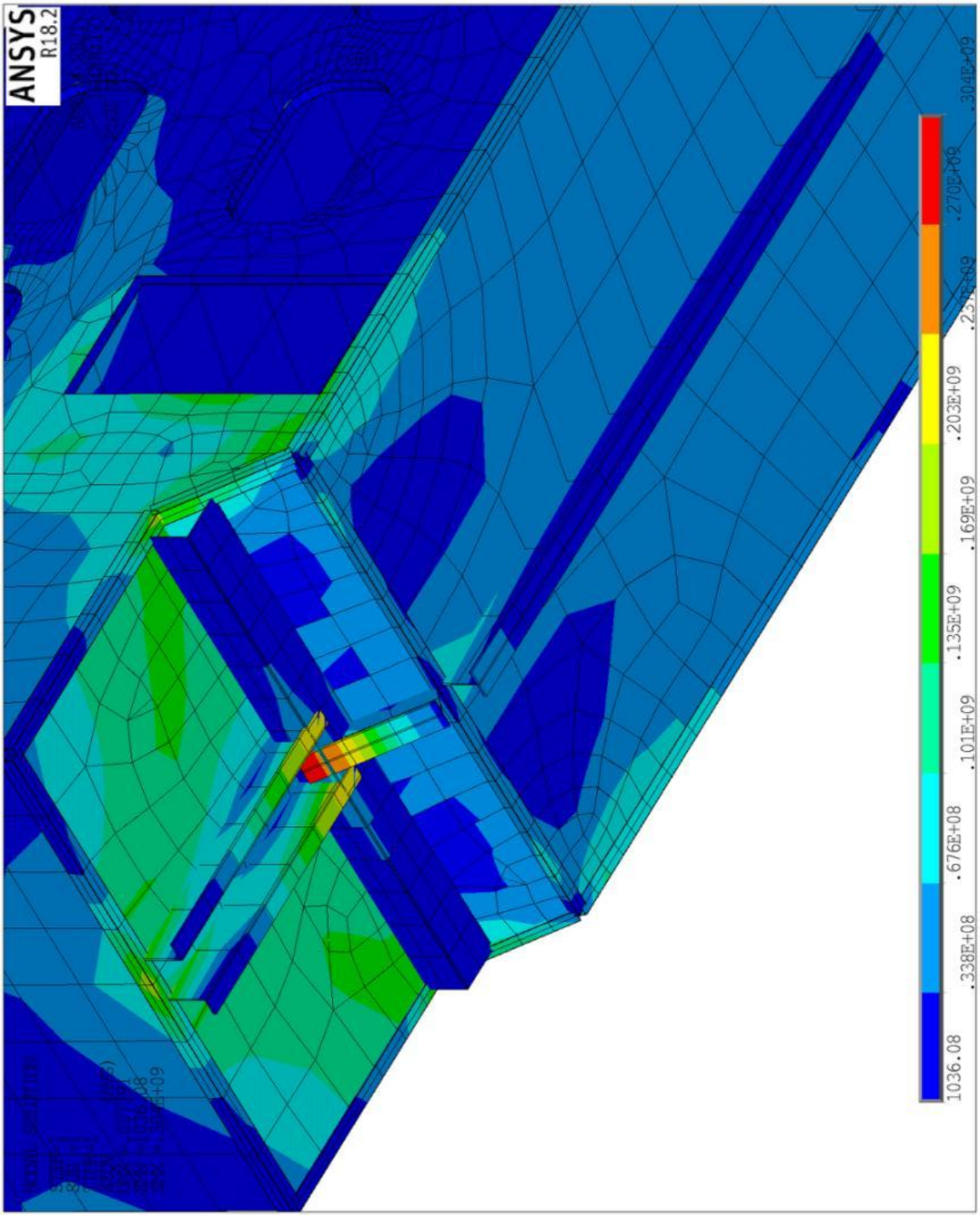

Figure 4.3 - Stress on the body according to von mises

The maximum stress at the I- th design mode in compression is at the body junctions.

4.2.2 First design impact mode

The finite element model in the I- th mode during impact is shown in Figure 4.4.

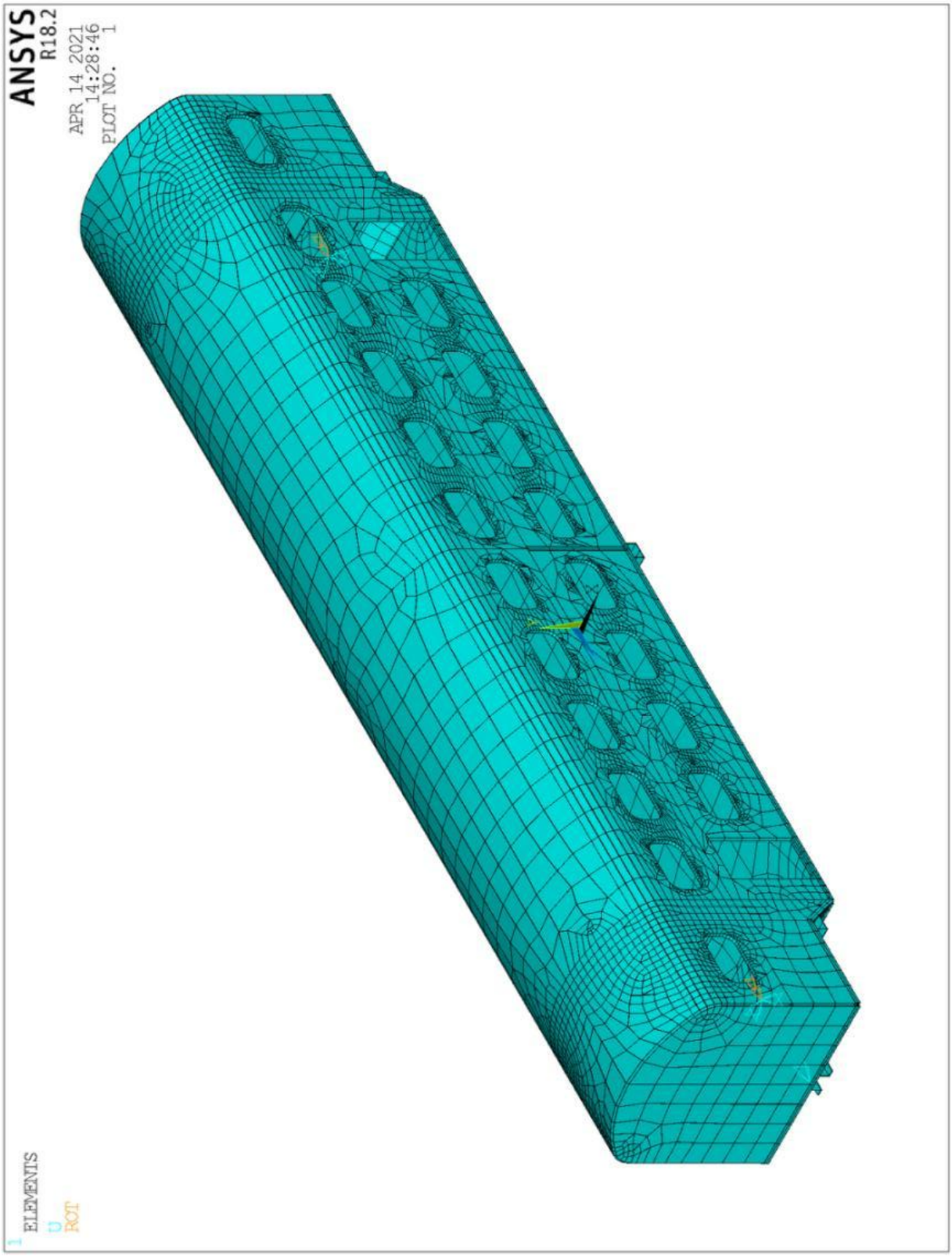

Figure 4.4 - The body of the car in the I- th mode for impact

The body of the car at the impact on the I- th design mode is shown in Figure 4.5.

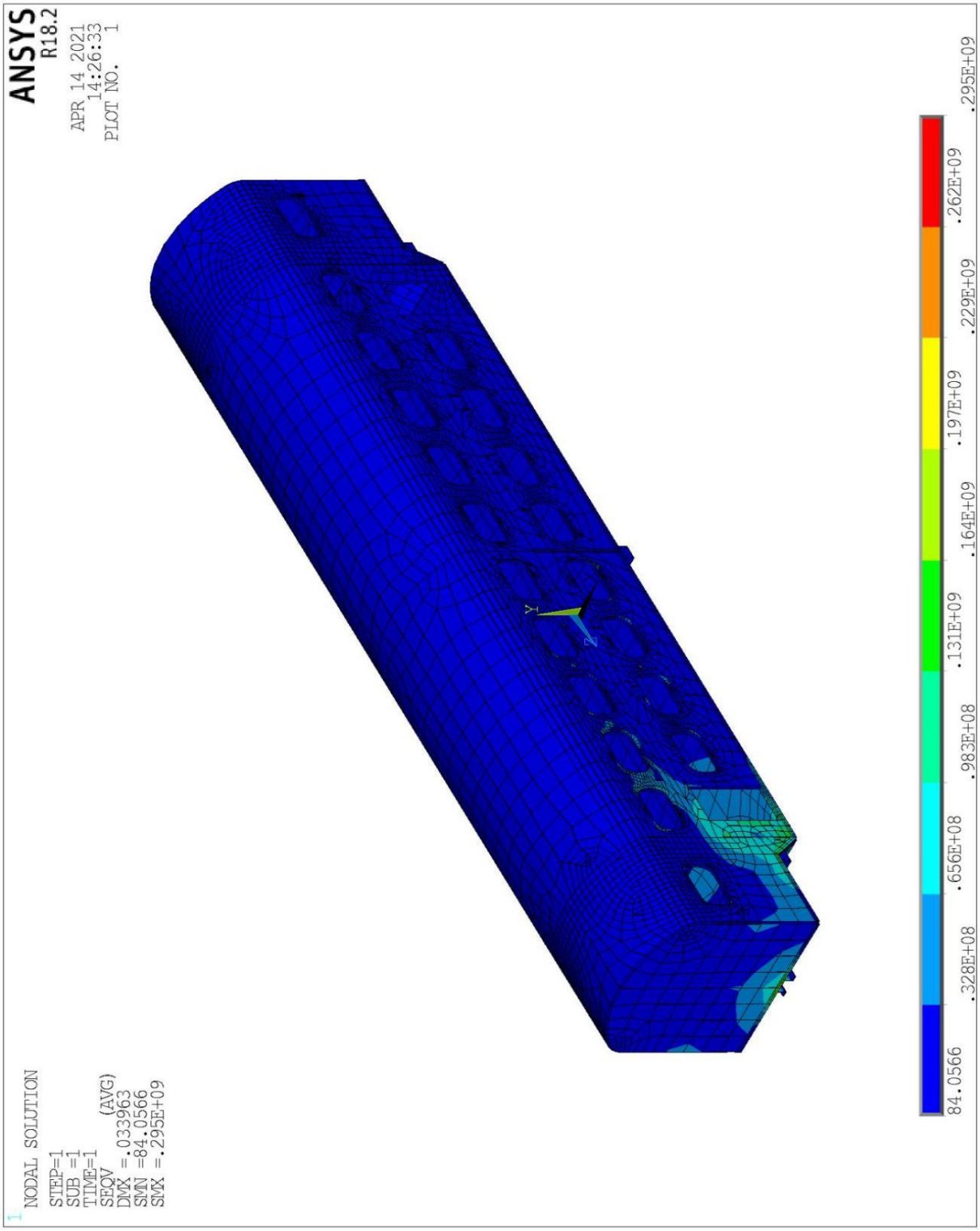

Figure 4.5 - The body of the car at impact on the I- th design mode
Maximum stress according to von mises calculated at $\left[\delta_y\right] = 295$ MPa

The maximum impact stress is shown in Figure 4.6 and Figure 4.7.

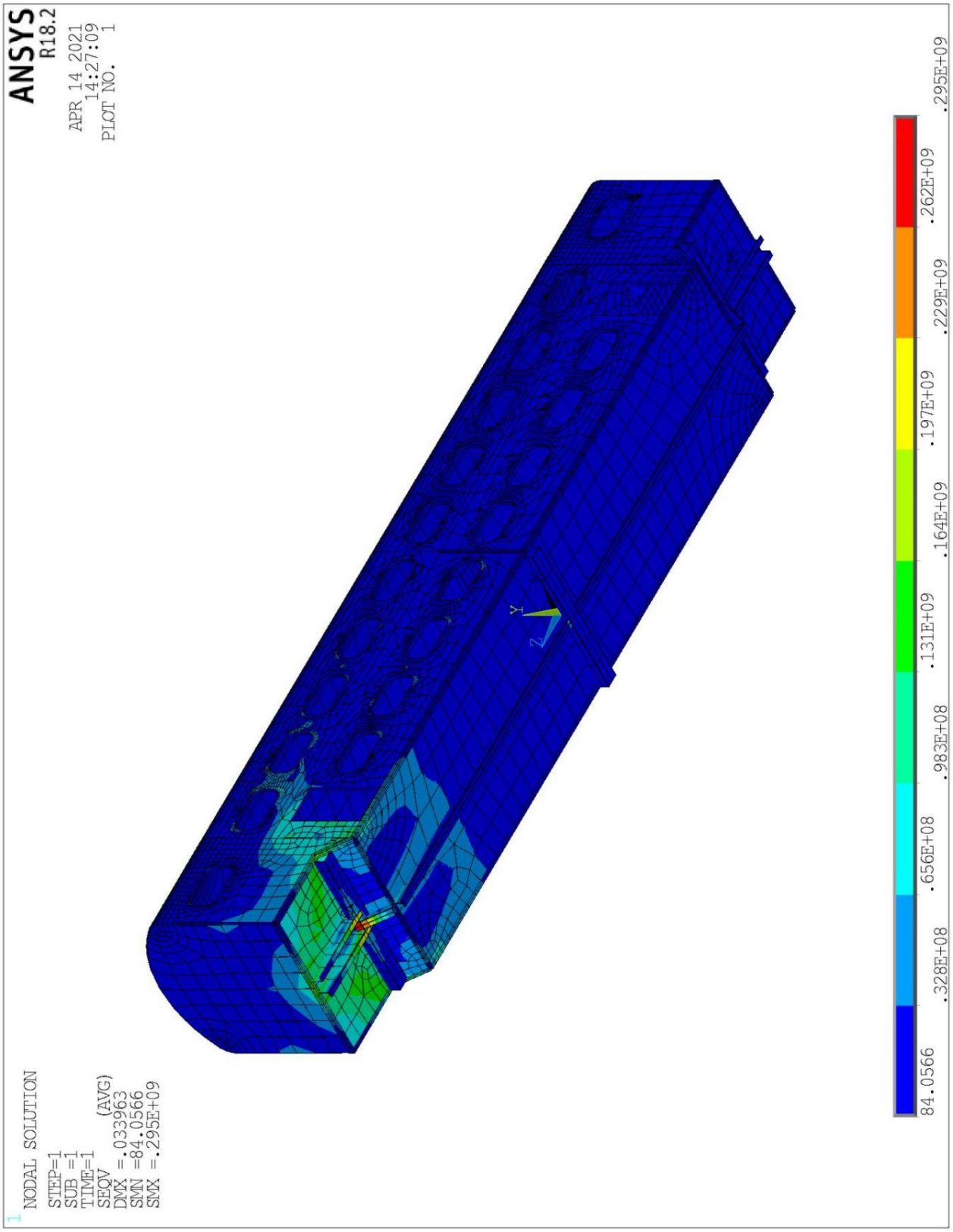

Figure 4.6 - Maximum stress at the I design mode at impact

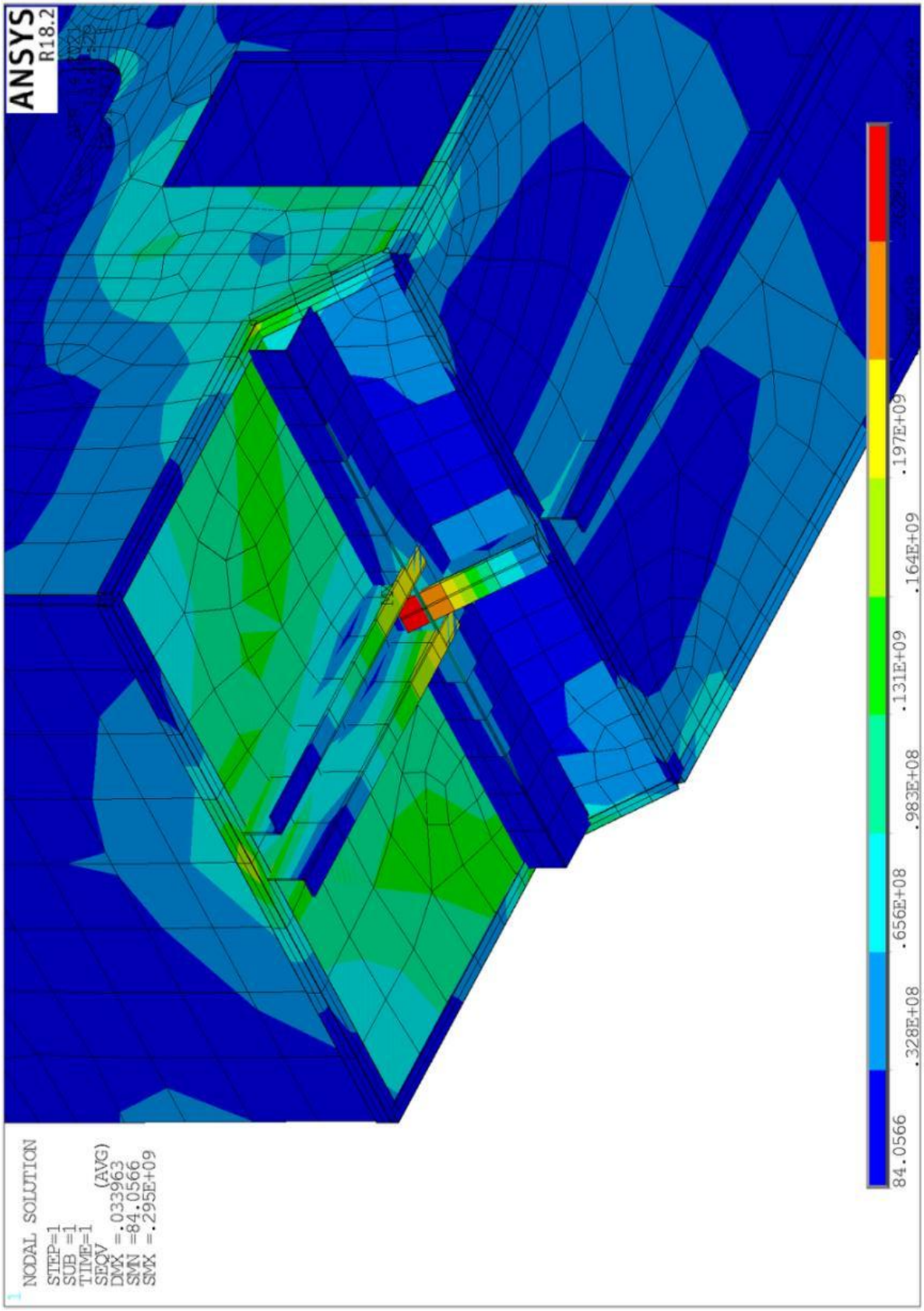

Figure 4.7 - Maximum voltage at the left transition of the body

The maximum stress at the I design mode on impact is at the left transition of the body.

4.2.3 The third main design tensile mode

When calculating according to the third design mode, the following combination of loads acting on the car body is taken:

a) longitudinal quasi-static force of 100 tons for tension and -100 tons for compression;

b) gross gravity, consisting of the body's own weight, the weight of the equipment installed on the body and the weight of passengers with luggage;

c) vertical dynamic force, determined by multiplying the gross gravity by the coefficient of vertical dynamics for the car body;

d) the force acting on the cantilever part of the car frame with non-central interaction of the automatic couplers of the two cars. Determined in accordance with Appendix 2 "Норм ...";

e) lateral force, taken according to the "Норм ..." 10% of the gross gravity.

The coefficient of vertical dynamics in accordance with the "Норм ..." is determined by the formula (4.2)

$$K_{дв} = \frac{K_{дв}^{ср}}{\beta}\sqrt{\frac{4}{\pi}\,ln\frac{1}{1-P(K_{дв})}}\ ,(\ \ ,(4.2)$$

where $K_{дв}^{ср}$ - is the average probable value of the coefficient of vertical dynamics;

β - the distribution parameter, according to the "Норм ..." is taken equal for passenger cars 1;

$P(K_{дв})$ - the confidence probability with which the coefficient of vertical dynamics is determined is taken equal to 0,98.

Substituting the data into formula 1, we get $K_{дв}$ = 0,222

The mean probable value $K_{дв}^{ср}$ is determined by the formula (4.3)

$$K_{дв}^{ср} = a + 3{,}6 \,.\, 10^{-4} \,.\, b \,.\, \frac{V - 15}{f_{cm}}, \quad (4.3)$$

where a is the coefficient equal to 0,05 for the sprung parts of the bogie.

Substituting the data into formula 2, we get $K_{дв}^{ср} = 0{,}0994$

b - coefficient taking into account the influence of the number of axles n in the bogie under one end of the carriage, is determined by the formula (4.4)

$$b = \frac{n + 2}{2 \,.\, n}, \quad (4.4)$$

where n is the number of axles in the bogie under one end of the carriage equal to 1.

Substituting data into formula 4.4, we get b = 1, 5.

V - design speed of movement, equal to 33,3 m / s ;

f_{cm} - the static deflection of the spring suspension is taken equal to 0,2 m.

In accordance with the "Норм ...", in the III- th mode, a tensile force equal to -100t is applied. The car body at the III design tension mode is shown in Figure 4.8.

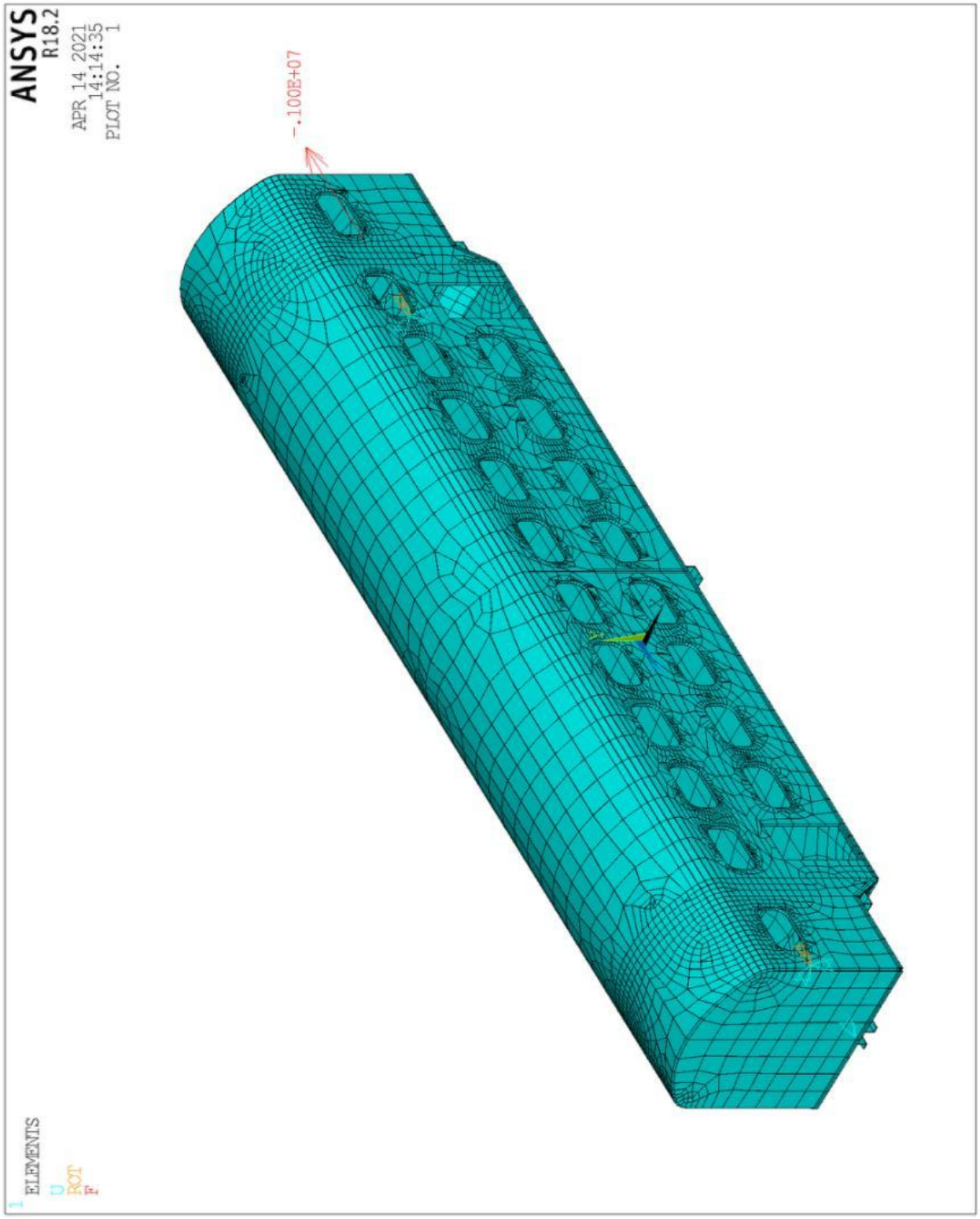

Figure 4.8 - Car body at the III design mode in tension

The car body under tension in the III design mode is shown in Figure 4.9.

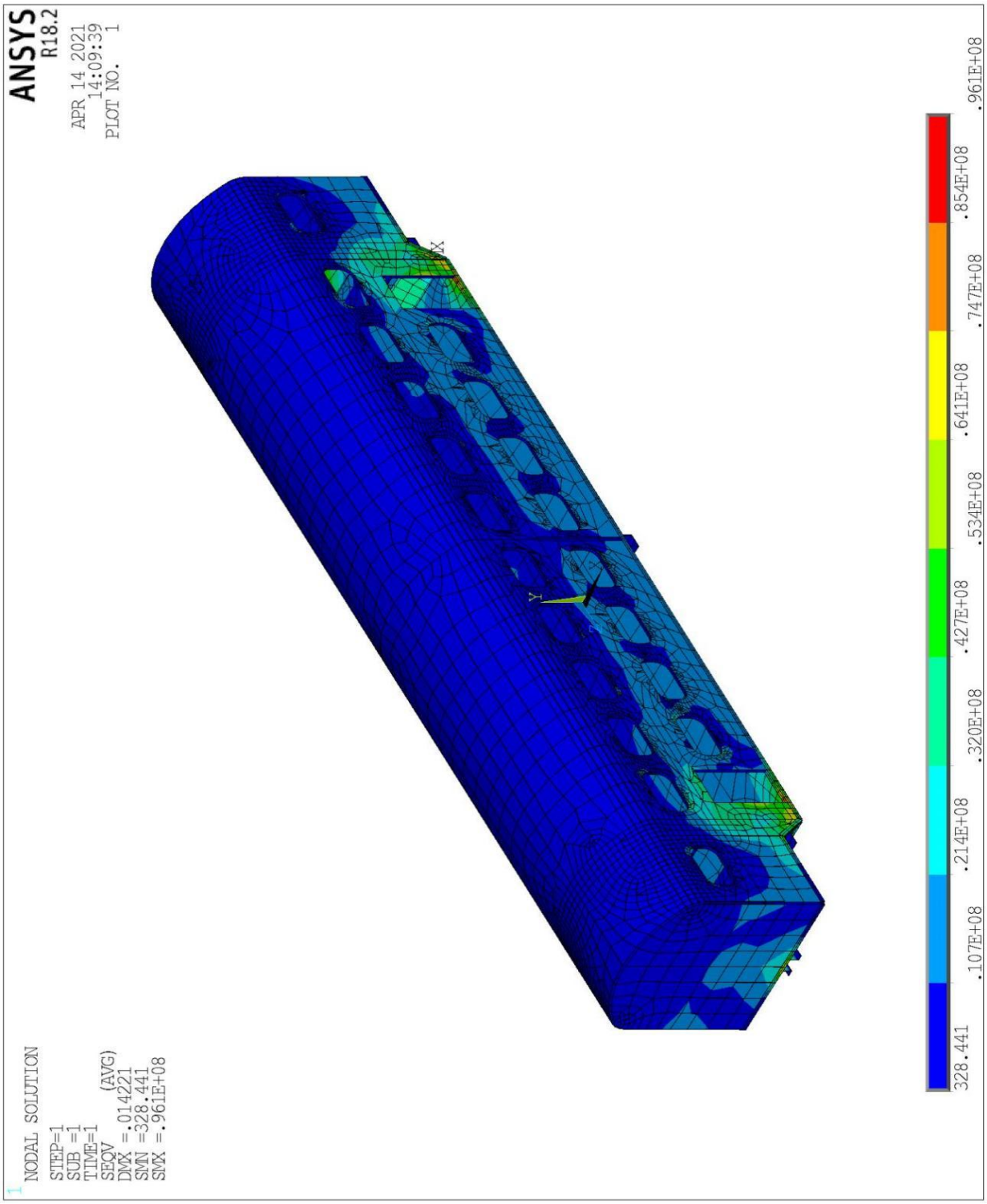

Figure 4.9 - Car body under tension in the III design mode

Maximum stress according to von mises when calculated $\left[\delta_p^{III}\right] = 96{,}1$ MPa

The maximum stress at the III design tensile mode is shown in Figures 4.10, 4.11 and 4.12.

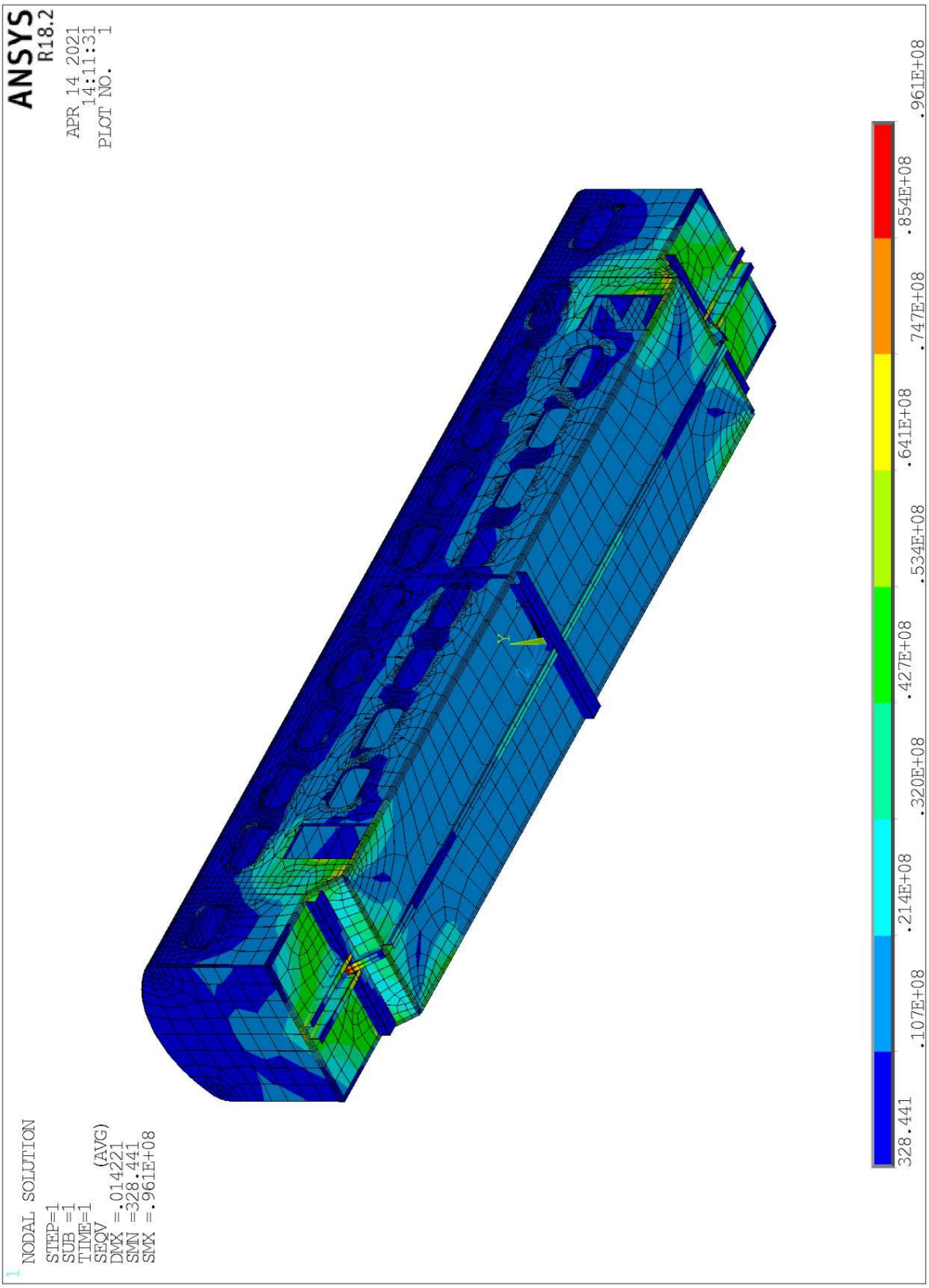

Figure 4.10 - Stress on the body at the III design tensile mode

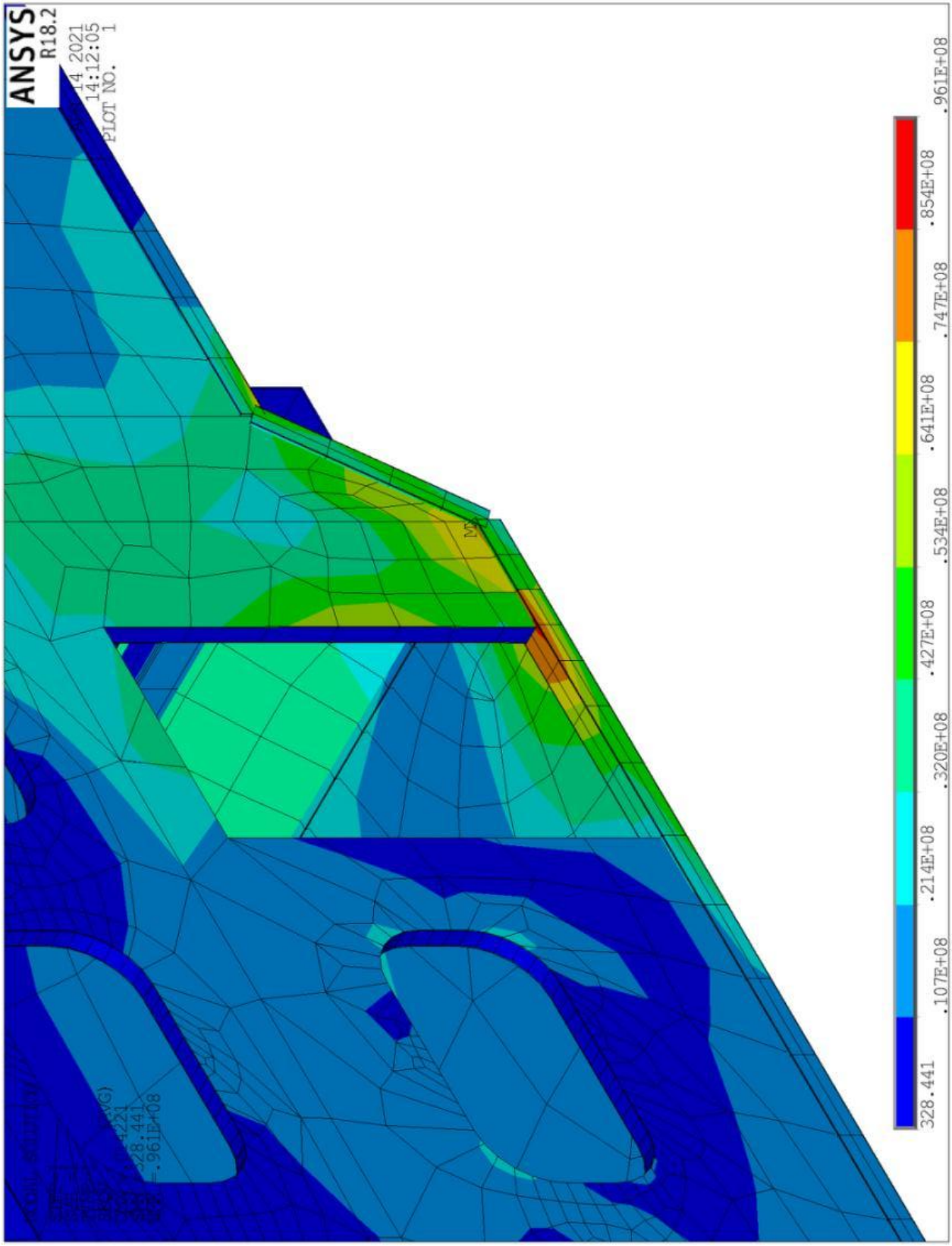

Figure 4.11 - Stress on the body at the III design mode in tension at the corner of the door

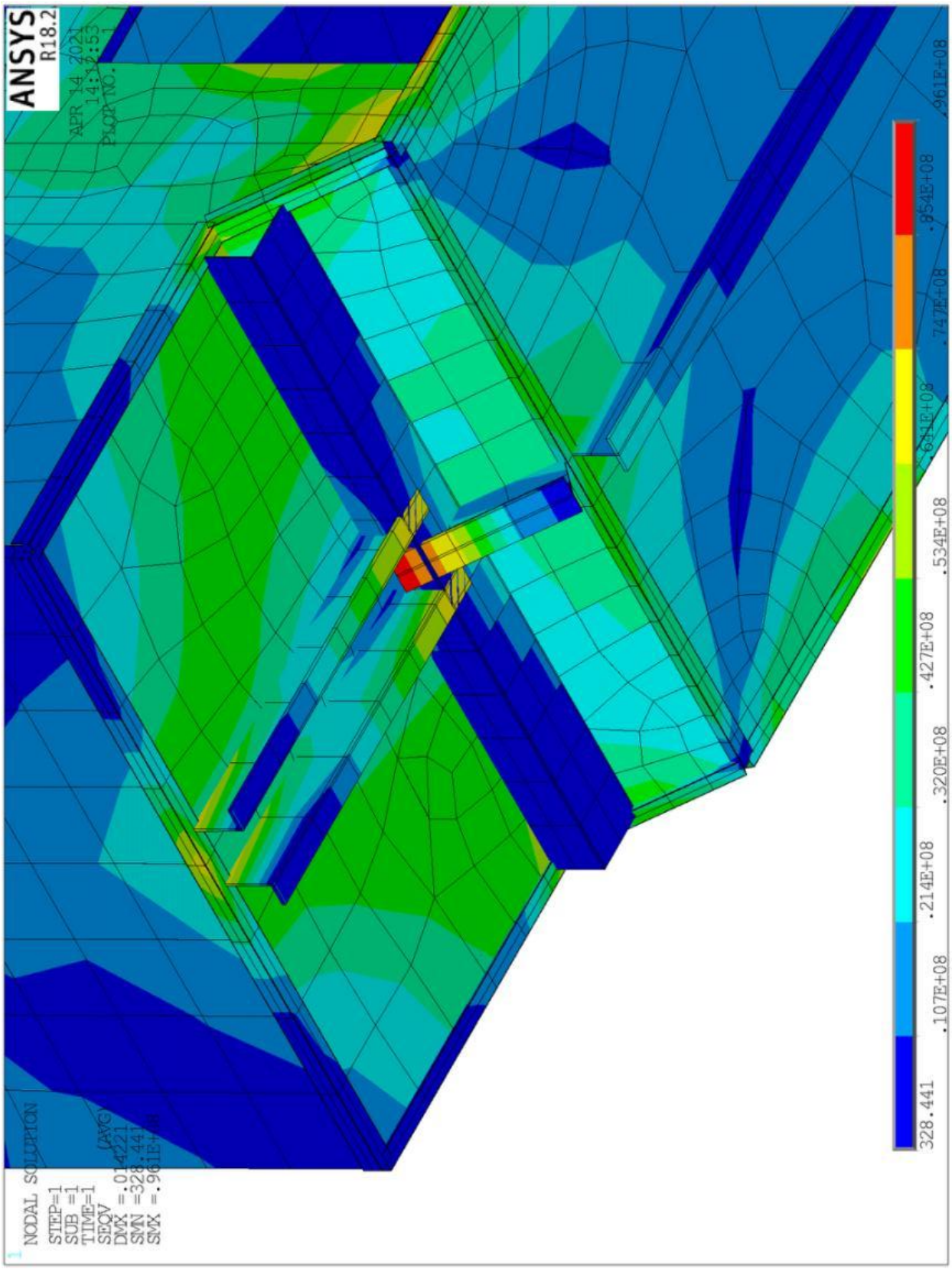

Figure 4.12 - Stress on the body in the III- th mode in tension at the transition of the body

4.2.4 The third main design mode in compression

In accordance with the "Норм ...", in the III- th mode, a compressive force equal to 100 tons is applied. The body of the car in the III- th design mode in compression is shown in Figure 4.13

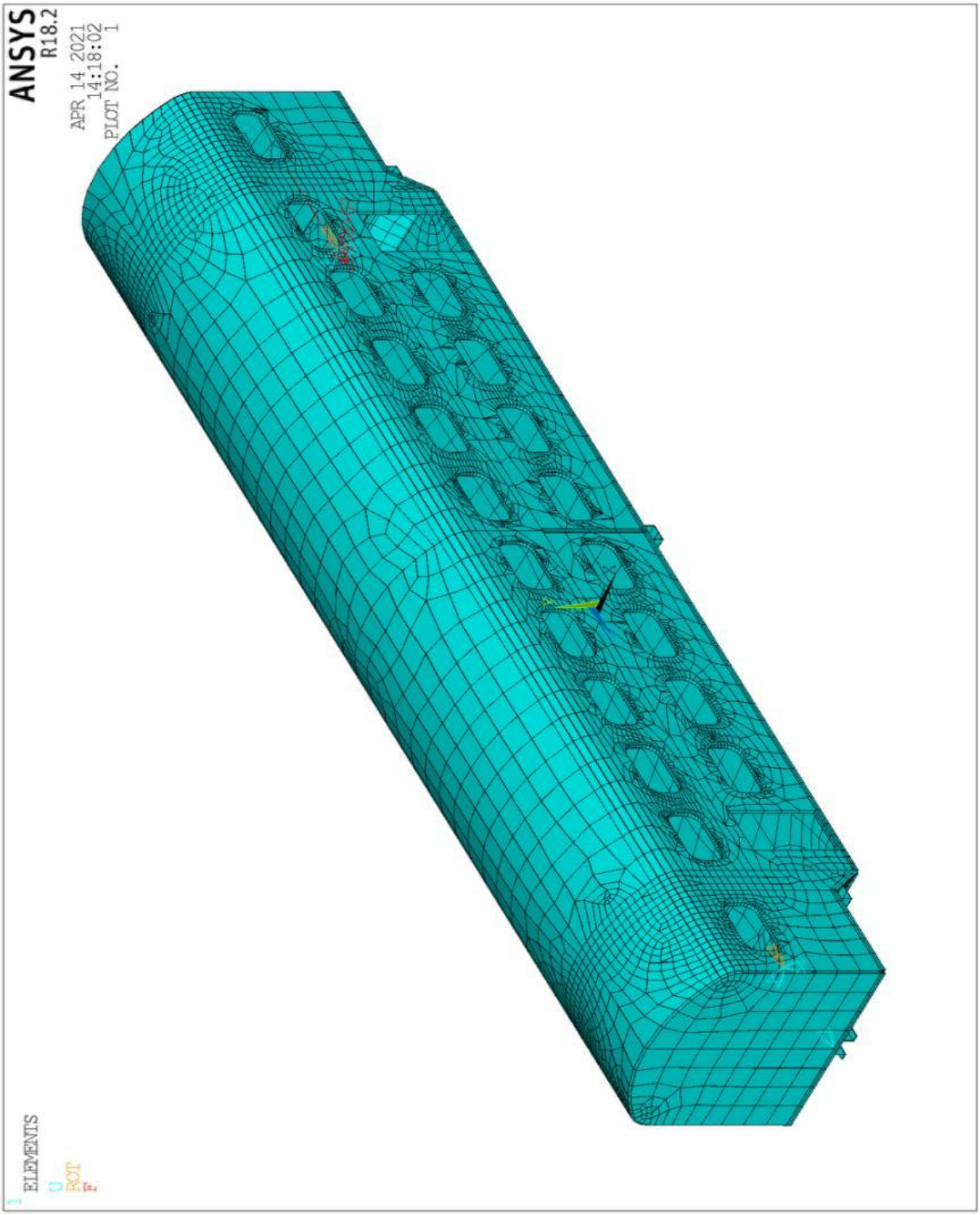

Figure 4.13 - The body of the car in the III- th mode in compression

The body of the car at the III design mode in compression is shown in Figure 4.14.

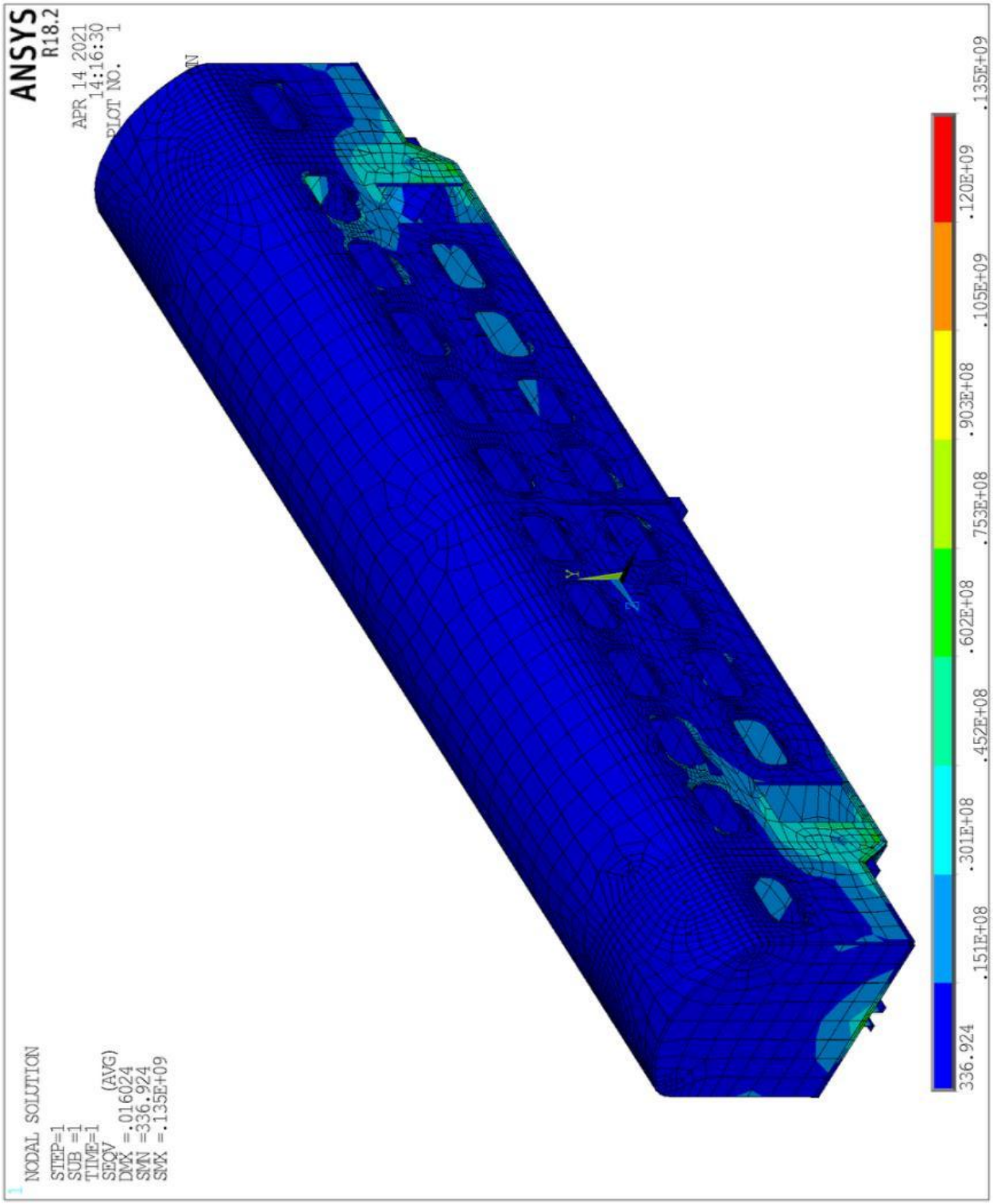

Figure 4.14 - Car body at the III design mode in compression

Maximum stress according to von mises calculated $\left[\delta_c^{III}\right] = 135$ MPa

The maximum compressive stress at mode III is shown in Figures 4.15 and 4.16.

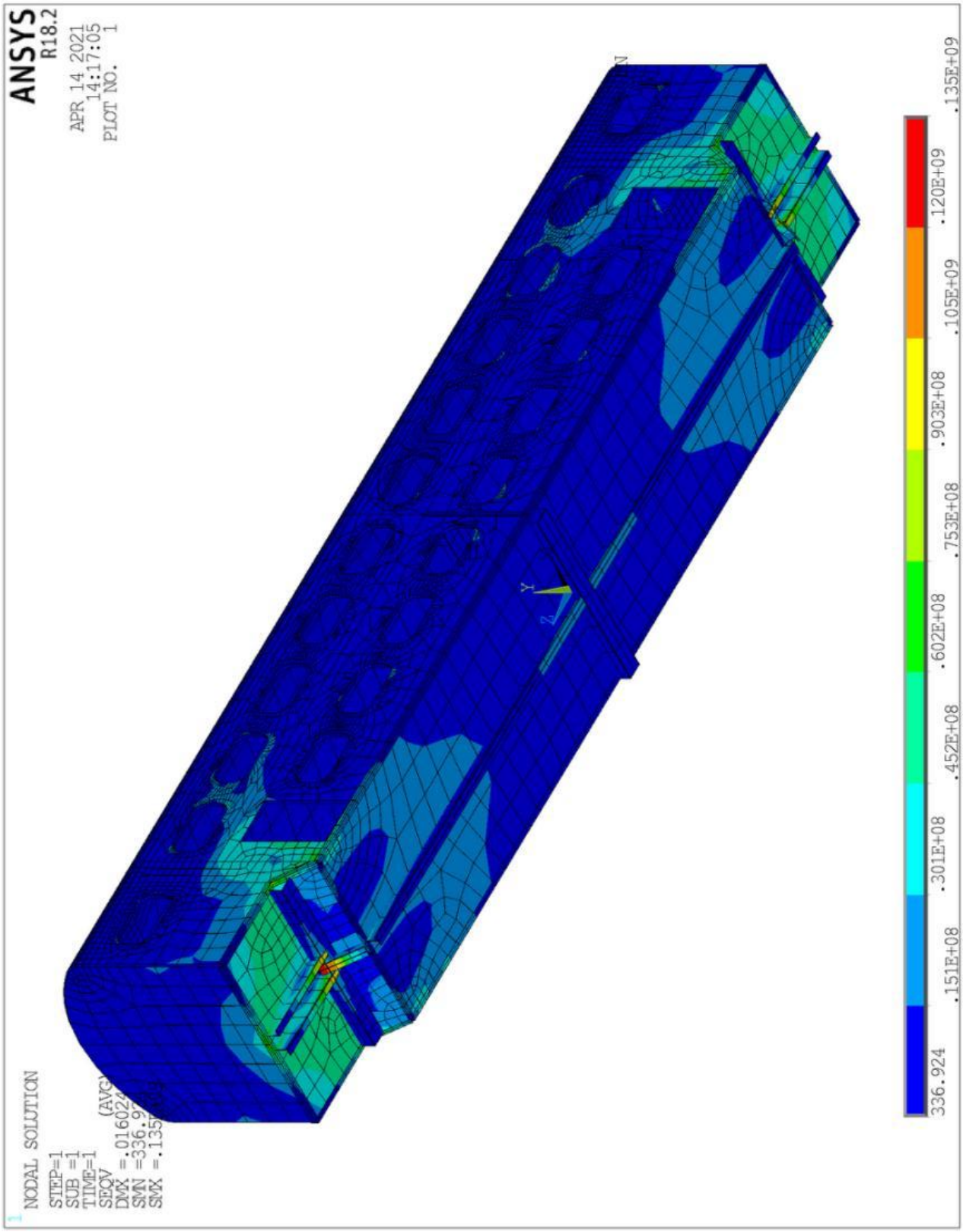

Figure 4.15 - Stress on the body in the III- th mode in compression

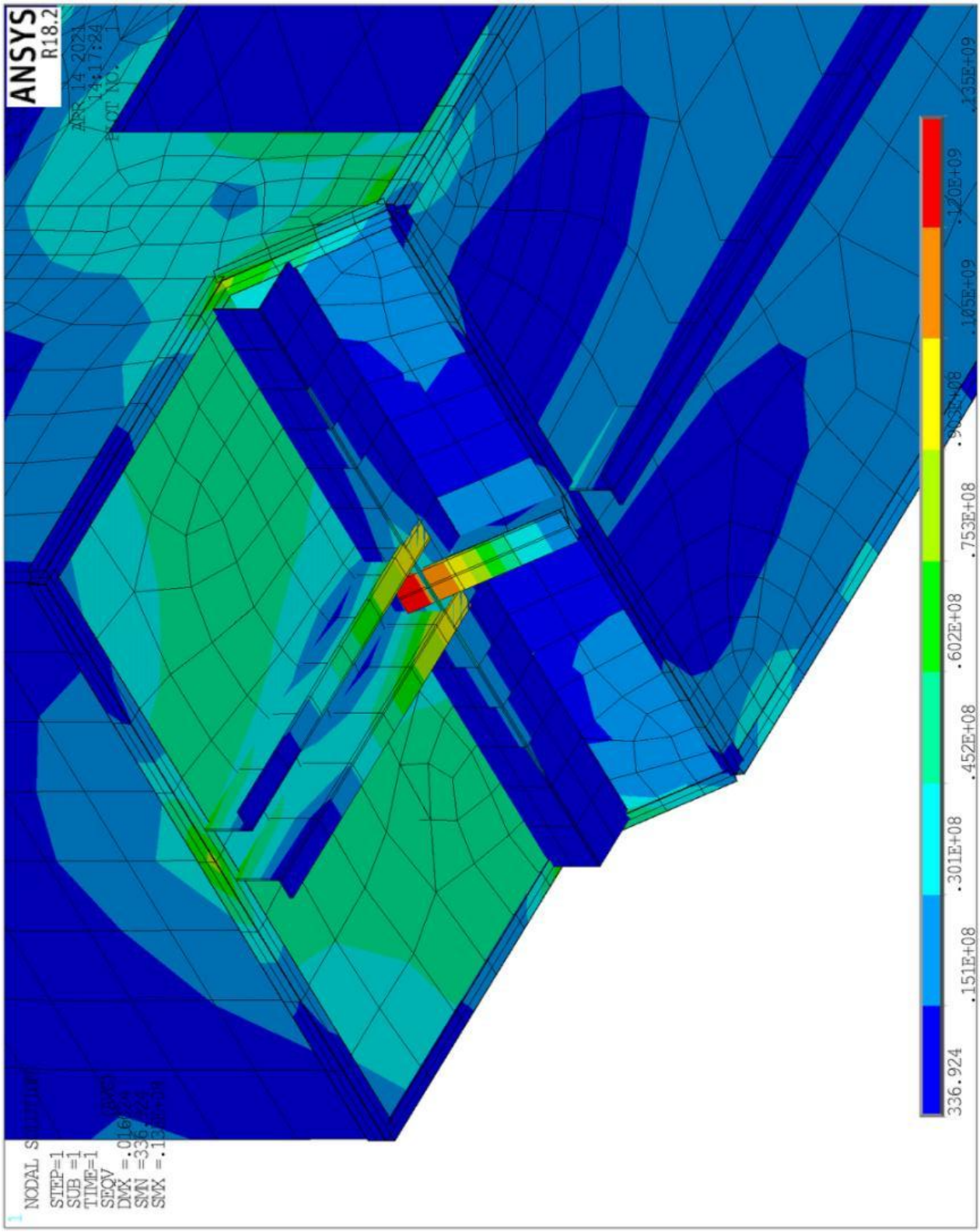

Figure 4.16 - Maximum compressive stress in the III design mode

The maximum compressive stress in the III design mode is at the body transitions.

4.3 Conclusion on strength calculation for I and III modes

a) According to the I- th design mode during compression, the maximum stress is perceived at the end of the car floor, that is, at the transition of the body. The maximum stress occurs on the pivot beam in the body transitions, which is equal to 304 MPa. The maximum stress that perceives on the beam is less than the allowable one. That is 304 MPa < $[\sigma] = 337{,}5$ MPa In addition, high stress is also perceived in the part of the body, which consists of aluminum σ_a = 131 MPa < $[\sigma] = 170$ MPa .

b) According to the I design mode upon impact, the maximum stress occurs at one end of the body, that is, at the transition. It is equal to $\sigma_c = 295$ MPa and less than the allowable steel. $[\sigma] = 337{,}5$ MPa. The maximum stress in the body wall is $\sigma_a = 131$ MPa and less than the allowable aluminum $[\sigma] = 170$ MPa.

c) According to the III design mode in tension, the maximum stress on von mises arises on the pivot beam, where the carriage transition, it is equal to $\sigma_c^{III} = 96{,}1$ MPa, but even less allowable which is equal to $\left[\delta_c^{III}\right] = 230$ MPa Part of the wall and floor of the car which consists of aluminum takes a sufficiently high stress equal to $\sigma_a^{III} = 64{,}1$ MPa but even less allowable $\left[\delta_a^{III}\right] = 120$ МПа.

d) According to the III design mode in compression, the maximum stress on von mises arises on the pivot beam, where the carriage transition, it is equal to $\sigma_c^{III} = 135$ MPa, but even less allowed, which is equal to $\left[\delta_c^{III}\right] = 230$ MPa. The part of the wall and floor of the car which consists of aluminum takes a sufficiently large stress equal to $\sigma_a^{III} = 75{,}3$ MPa but even less allowable $\left[\delta_a^{III}\right] =$ 120 МПа.

5 Stability analysis

The stability of the car is checked by comparing the calculated values of the safety factor of the car stability n_y with the permissible values. Safety factor n_y has adopted as a criterion for determining the allowable displacement load mass center is calculated as the ratio of the vertical static load of the wheel on the rail to the dynamic vertical force of the wheel on the rail caused by centrifugal force and the force of the wind, taking into account its horizontal lateral displacement of the center mass of the loaded wagon due to gaps in the side Slides and strains of spring kits, as well as the nesimmet - ary placement of cargo.

Comparison of the calculated values of the safety factor of the stability of the car n_y with the permissible values is determined by the formula (5.1)

$$n_y \geq [n_y] \quad (5.1)$$

where, [n_y] - permissible values of the stability safety factor, which are set depending on the design, the accuracy of the calculation and the responsibility of the calculated element. $[n_y]$ = 1,1 - 1,5.

5.1 Calculation of the stability of the car in the I- th design mode

In the I- th design mode, the applied longitudinal force along the z axis is equal to 250 ton, g = 21,56 m /s^2 .

The result of moving the car body under the I- th design mode on stability is shown in Figures 5.1 and 5.2.

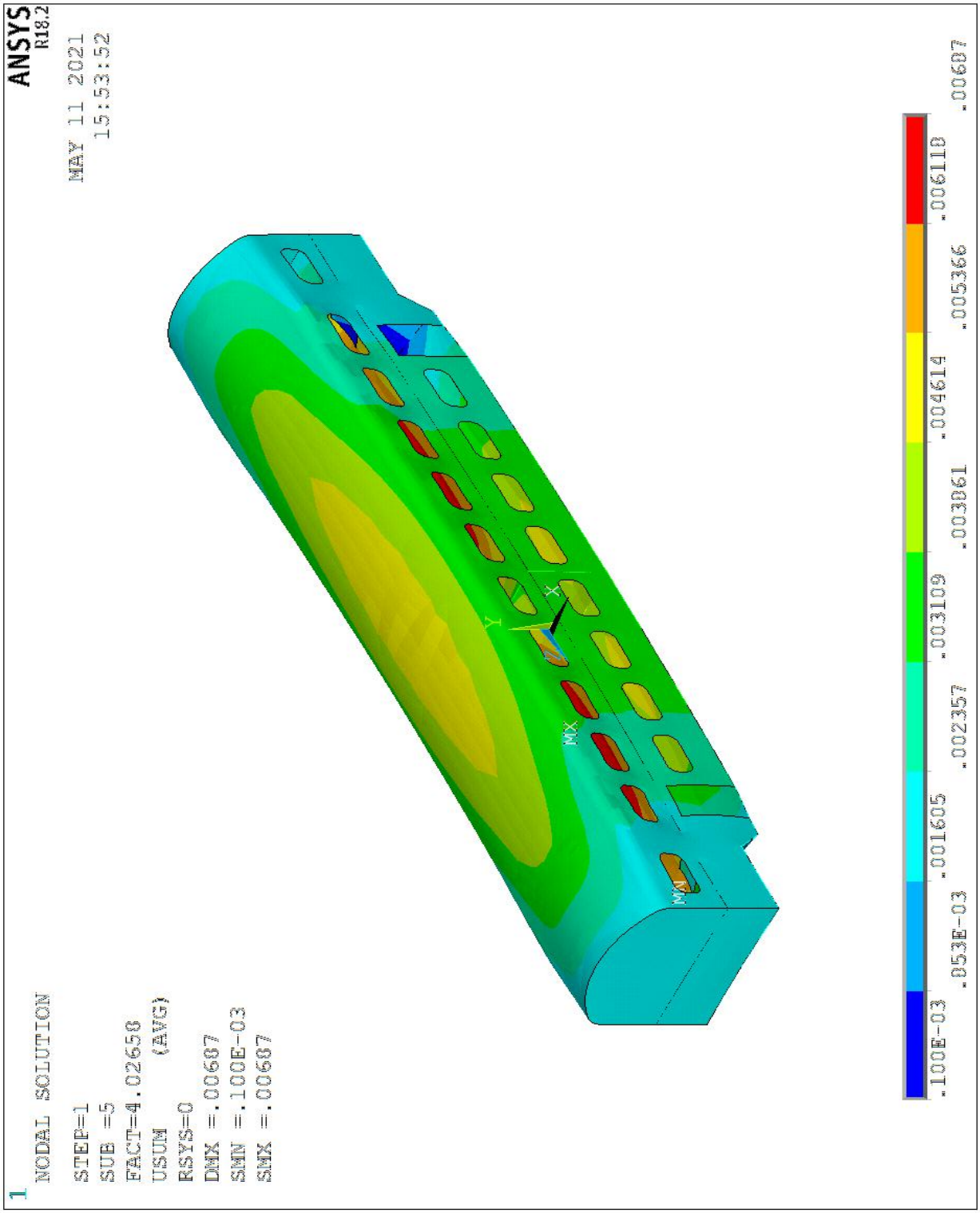

Figure 5.1 - Calculation of the car for stability in the I- th design mode (movement vector sum)

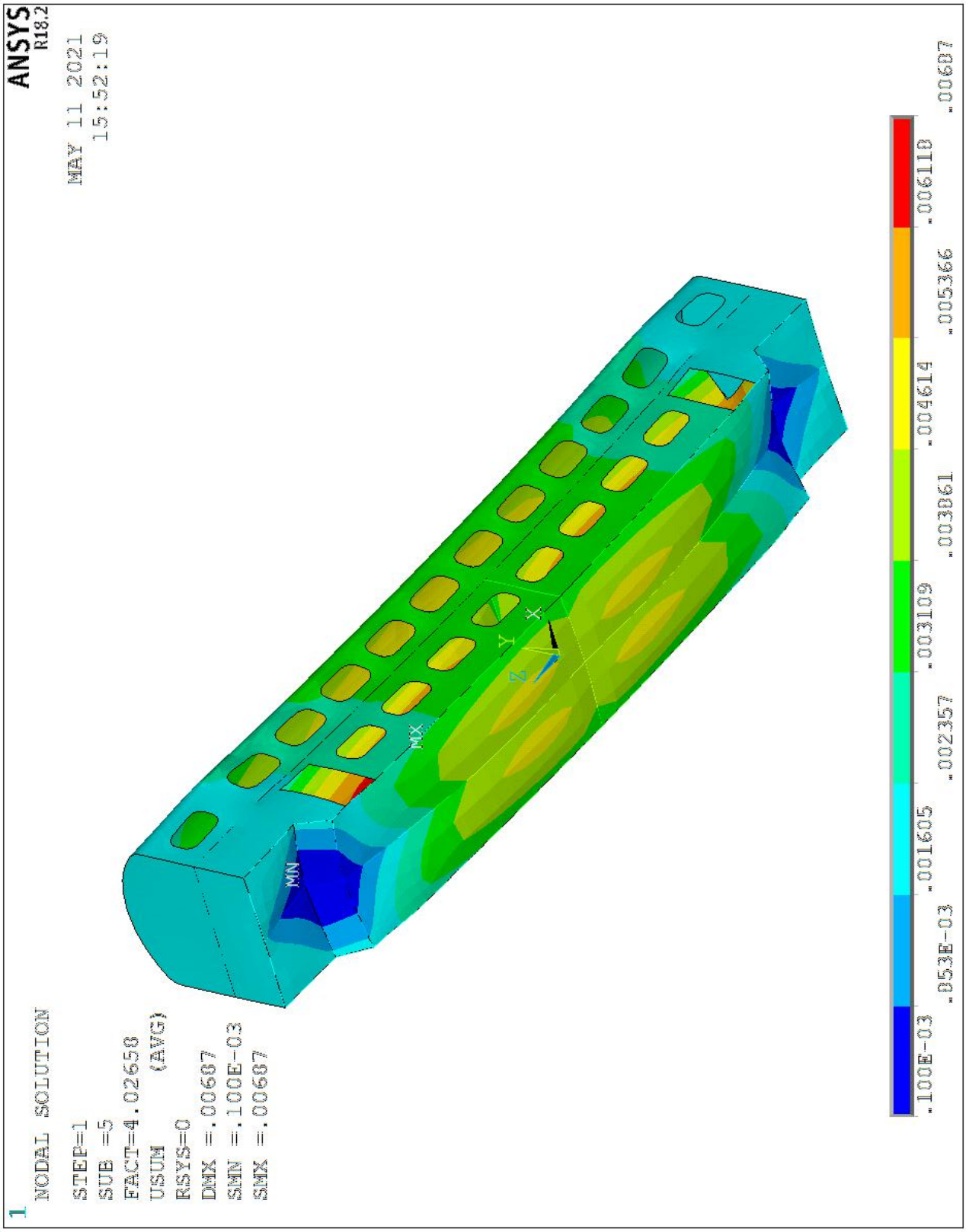

Figure 5.2 - Movement of the unit in the car at the I- th design mode

In the I design mode, the safety factor is equal to $n_y = 4{,}026$.

5.2 Calculation of carriage stability in the III design mode

In the III- th design mode, the applied longitudinal force along the z axis is equal to 250 ton, g = 9,81 m / s^2 .

The result of moving the car body under the III design mode on stability is shown in Figures 5.3 and 5.4.

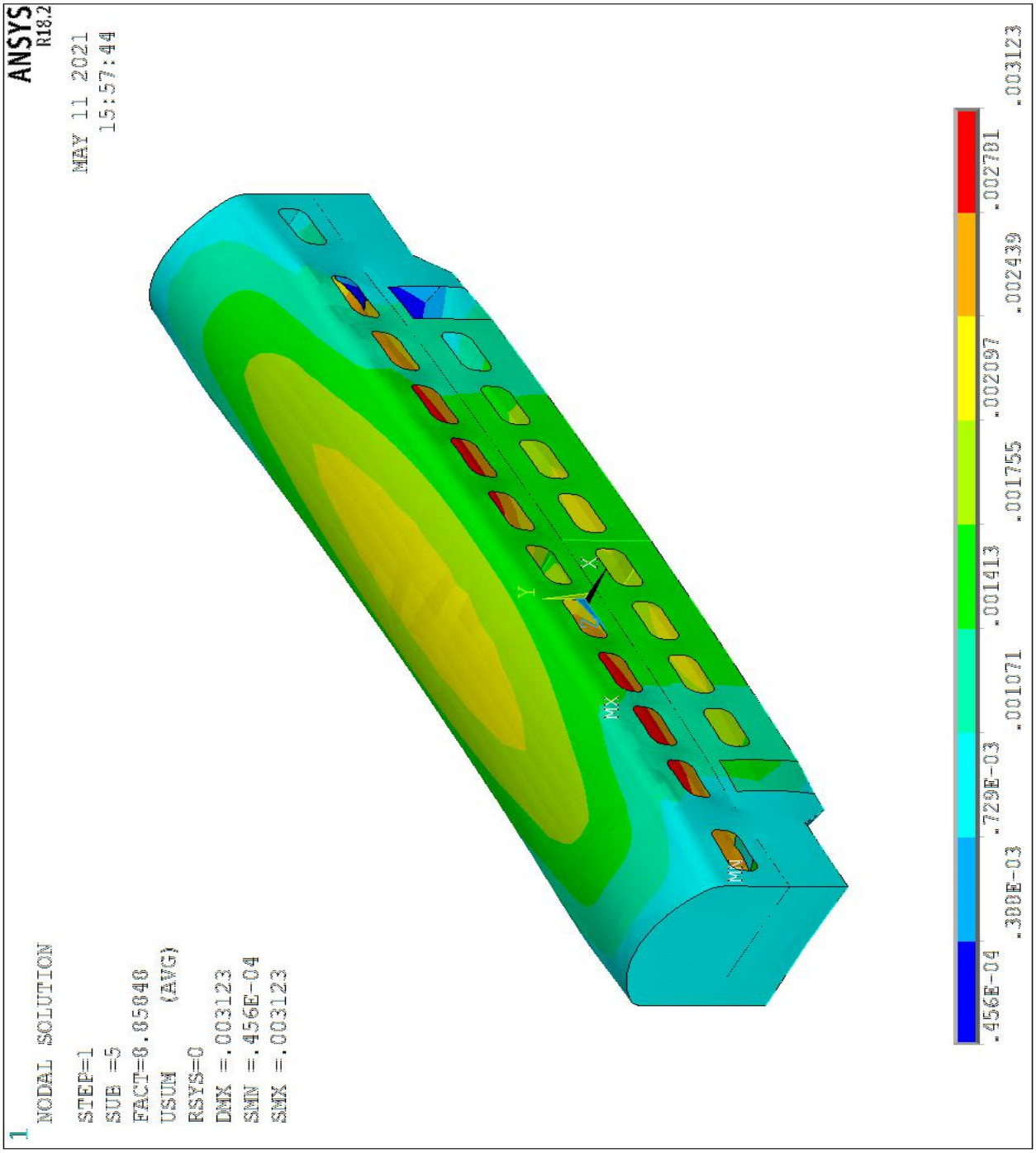

Figure 5.3 - Calculation of the car for stability in the III- th design mode (movement vector sum)

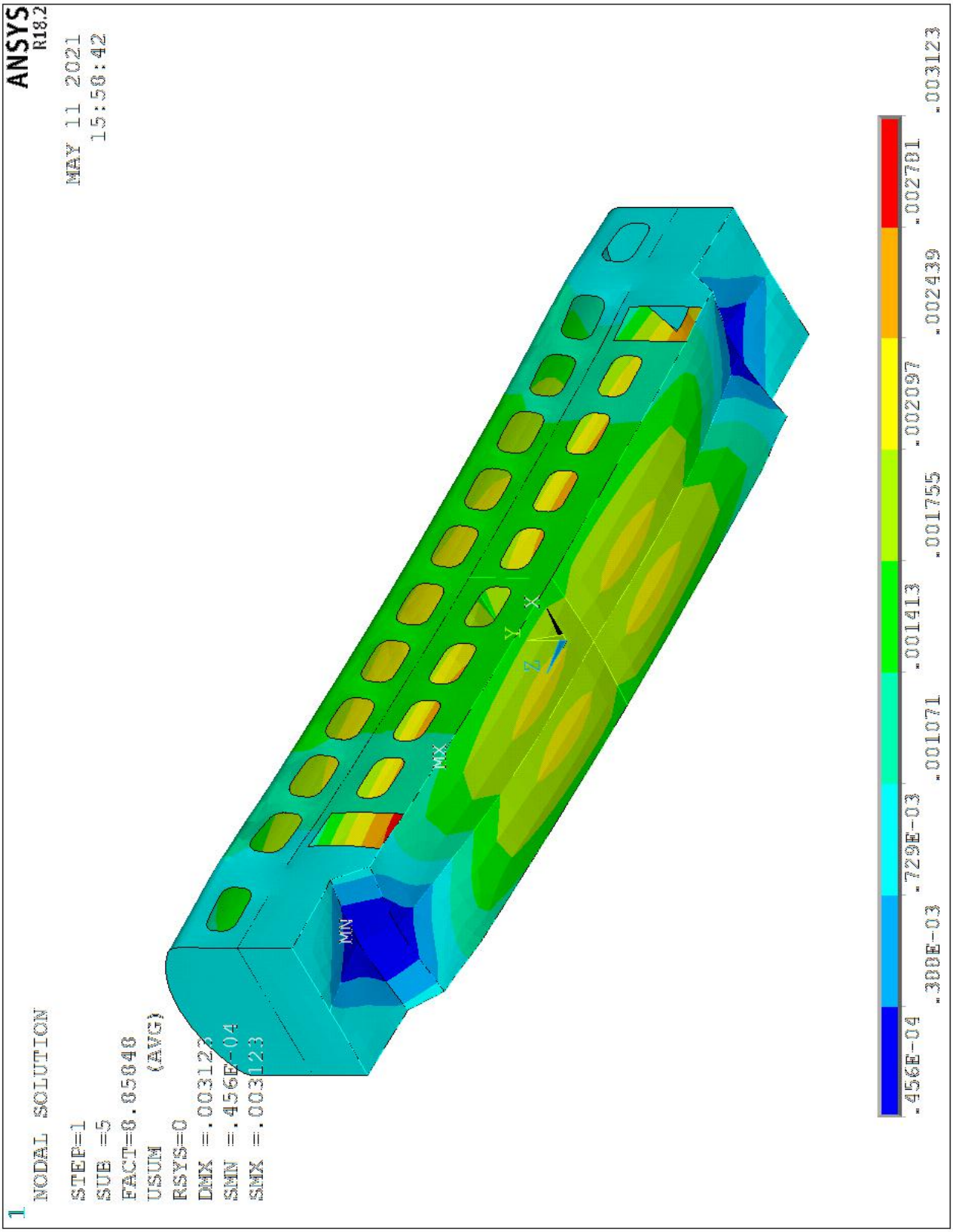

Figure 5.4 - Movement of the unit in the car at the III design mode

In the I design mode, the safety factor is equal to $n_y = 8{,}054$.

5.3 Conclusion on the calculation of stability of I and III modes

a) Calculation for stability in the I- th design mode is equal to $n_y = 4{,}026$, the safety factor in the calculation is greater than the permissible $n_y \geq [\ n_y\ ] = 1{,}1$. The lower part of the carriage bends but still has excellent support.

b) Calculation for stability in the III- th design mode is equal to $n_y = 8{,}054$, the safety factor in the calculation is greater than the permissible $n_y \geq [\ n_y\ ] = 1{,}5$. The lower part of the carriage bends but still has excellent support.

6 Calculation of frequencies and wave form

During the movement of a carriage on a rail, the car body experiences oscillatory movements. These vibrations are excited by dynamic forces and are caused by irregularities in the track, tapering of the rolling surface of wheelsets, the presence of gaps on the butt rail joints, as well as the presence of irregularities on the surface, inconstancy of the physical properties of wheelsets and track materials, changes in the car speed, type of spring suspension, and others.

Oscillation forms the following types of main oscillations can occur:

a) Bouncing, when the sprung parts of the car move up and down and parallel to the initial position along the $z - z$ axis by an amount ± z, which occurs under the action of vertical dynamic forces that are accelerated along the ends of the body.

b) Galloping, when the sprung parts of the car rotate about the $y - y$ axis *at an* angle of ± θ, this action arises from the impact of wheels at the joints, the presence of potholes on one wheel pair or from the imbalance of the body. Galloping of a carriage usually occurs simultaneously with bouncing.

c) Oscillations of the lateral deflection when the car body and bogie move along the $y - y$ axis . This type of oscillation occurs in conjunction with oscillations of lateral rolling under the action of horizontal lateral forces and parallel to the axis.

d) Wobble, when the body rotates around a vertical axis at a certain angle ± ψ, and it is caused by improper installation of wheelsets, tapering of the rolling surface of the wheels, unequal wheel diameters, and tortuosity of the path.

e) Twitching when moving the car along the x-x axis . It appears when the train starts to move, braking due to the imbalance of the progressively moving masses of the locomotive.

The frequency of natural oscillations υ_c depends on the mass of the bolster parts of the car and the rigidity of the spring suspension.

According to the Норм, with the equalization of the calculated values of the natural vibration frequencies of the car with the permissible values, it is determined by the formula (6.1) - the permissible values $[v_c]$ of the frequency oscillations $[v_c]$ = 10 Hz .

The result of moving the car body for calculating the natural vibration frequency is shown in Figures 6.1 and 6.2.

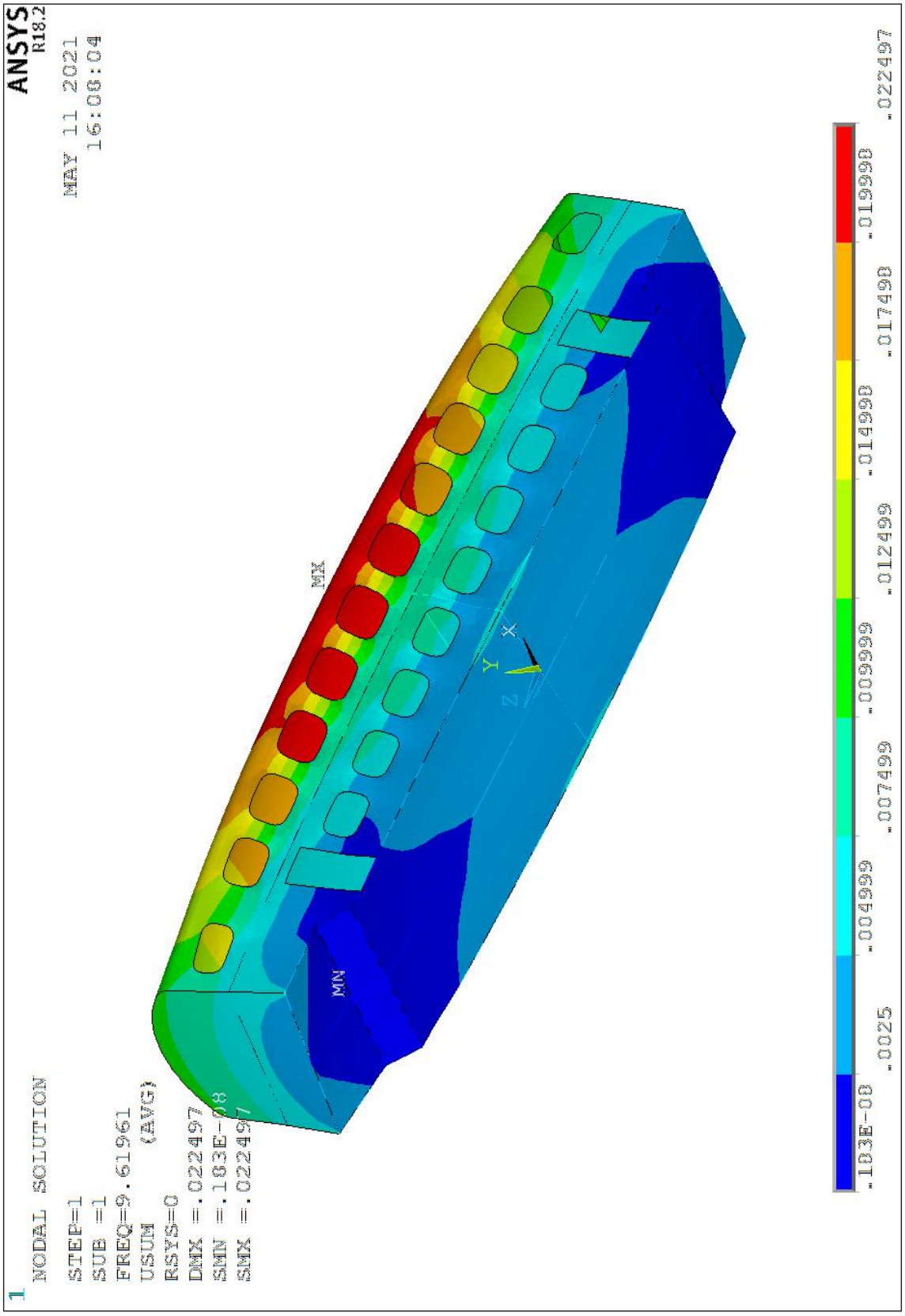

Figure 6.1 - Calculation of the natural frequencies of the car, bottom view

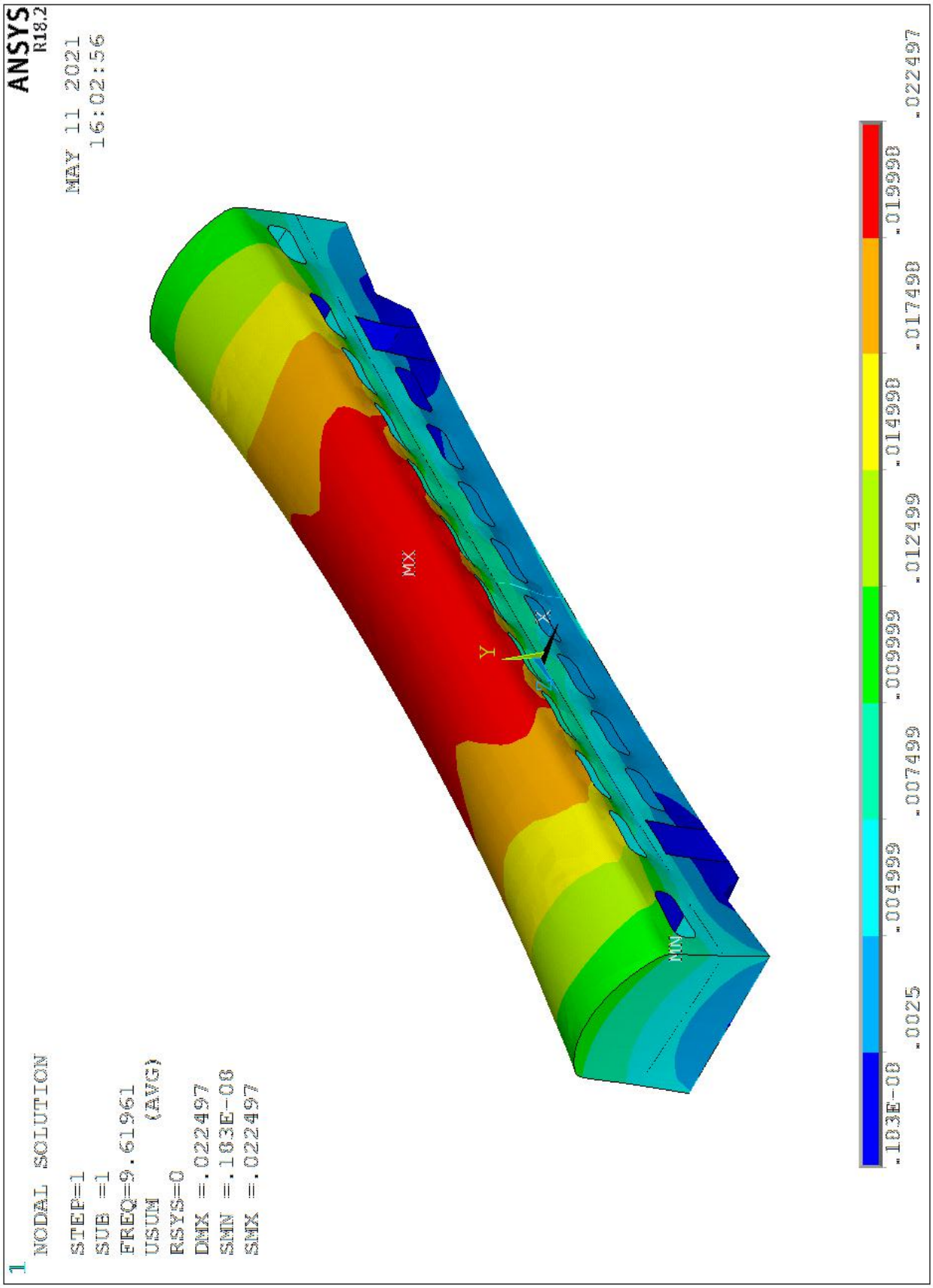

Figure 6.2 - Calculation of the natural frequencies of the car, top view

The frequency is close to 10 Hz.

6.1 Conclusion on the calculation of the natural frequencies of the car

The result of the calculation, the frequency v_c is close to 10 Hz, and therefore the design of the car meets the requirements.

Results from 3 types of computational programs in ANSYS , all passed those allowed by the "Норм ...".

7 Analysis of materials for thermal insulation and fire extinguishing equipment

7.1 Analysis of the materials used for the thermal insulation of the car

For thermal insulation of a passenger car, I suggest using expanded polystyrene. Expanded polystyrene is a lightweight material of the class of polystyrene-based polystyrene foam. Expanded polystyrene is one of the most popular foam plastics, accounting for a quarter of world demand - 25%. Expanded polystyrene is subdivided into:

a) Expanded polystyrene foam - (EPS) ;

B) Extruded polystyrene foam - (XPS) .

According to GOST 30244-94, expanded polystyrene belongs to the flammability groups G3 - G4 and synthetic polymers. The flammability group is one of the important indicators of heat insulation, indicating its fire hazard. The flammability group of materials is shown in Table 7.1.

Table 7.1 - Flammability groups of materials

Flammability group according to GOST 30244-94	The name of the **joint venture is 112.13330.2011** .	Flue gas temperature , ^{o}C	Length of damage, %	Damage rate by weight, %	Duration of self-burning, s.
D1	Weakly flammable	<135	<65	<20	0
G2	Moderately flammable	<235	<85	<50	<30
G3	Hopмally flammable	<450	<85	<50	<300
G4	Highly flammable	> 450	> 85	> 50	> 300

Synthetic polymers are flammable. According to the Hopмative document, the use of expanded polystyrene is possible "as a middle layer of building enclosing structures and industrial equipment in the absence of contact between slabs and internal rooms . " Ignition of the material can occur from a flame lamp, match flame, and welding sparks. But, when touching a calcined iron wire, a burning cigarette and sparks when turning steel, expanded polystyrene does not ignite.

The specific heat of combustion of expanded polystyrene is 4.3 times higher than that of pine wood and its linear speed of fire propagation is 1.5 - 2 times higher than the speed of fire propagation through dry wood. Combustion of expanded polystyrene is accompanied by the release of thick black smoke, but its toxicity is lower compared to the toxicity of smoke from the combustion of conventional building materials.

The use of expanded polystyrene is possible as a filler in a sandwich panel as well as for a car's thermal insulation system. The use of external thermal insulation systems in construction that have not passed full-scale fire tests is not allowed.

Expanded polystyrene quickly turns into a liquid state and depolymerizes during combustion. The theoretical consumption of air for combustion of expanded polystyrene is 256 m^3 / m^3 . 1 m^3 of expanded polystyrene contains 0.98 m^3 of air, which is not enough to maintain combustion. Therefore, it can be noted that, in a confined space, the material itself does not burn.

In order to prevent and reduce the risk of fire, a special polystyrene foam with additives of fire retardants was developed, a component of an additive of material of organic origin for the purpose of providing fire protection, which is called "self-extinguishing" and is indicated by an additional letter "C" at the end. PSB-S is an example of self-extinguishing expanded polystyrene - a material consisting of air- filled cellular polystyrene granules that have undergone heat treatment.

7.2 Comparison of fire extinguishing equipment used on rolling stock in Indonesia and the Russian Federation

7.2.1 Extinguishing media for rolling stock in Indonesia

Fire classes based on Indonesian Railways Standard Operating Procedures:

a) Class A.

Combustion is caused by solid materials, with the exception of metal, which leaves behind charcoal and ash. These hard material elements typically contain carbon, such as paper, plastic, rubber, foam, and the like. For these situations, water is a suitable extinguishing agent because water absorbs heat and can enter.

b) Class B.

Fire caused by flammable liquids and gases containing hydrocarbons from petroleum products and their chemical derivatives such as oil, alcohol, gasoline and others. Foam is a suitable extinguishing agent because it covers the surface of the liquid floating on the surface. For gases, a powder or carbon dioxide is a suitable extinguishing medium because the oxygen displacement process takes place, which determines the combustion reaction.

c) Class C.

Fire caused by electric shock, such as electronic equipment. Suitable extinguishing media are carbon dioxide or dry powder extinguishers.

d) Class D.

Combustion of metals. The extinguishing media used must be specially designed to cover the surface of the burning material, such as powders. It is not recommended to use extinguishing media such as water or other media. Pre-selected powders are used depending on the class of fire.

The passenger carriage must be equipped with at least the following safety equipment:

a) Fire extinguisher

b) Emergency hammer

c) Safety instructions

Each carriage has at least two fire extinguishers with a capacity of 3-5 kg with dry chemical or other type suitable for the given type of ignition source and in accordance with the preservation of environmental functions.

The following fire extinguishing means are used in passenger cars:

a) Manual carbon dioxide fire extinguishers (ОУ - 5);

b) Manual powder fire extinguishers (ОПУ - 5);

c) Air-foam fire extinguishers (ОВП - 5).

Placements of fire extinguishers in wagons:

a) The fire extinguisher is located on the walls, secured with a belt in cabinets or drawers;

b) In closed cabinets or drawers, provided that there is a protective glass in front of it with a maximum thickness of 2 mm;

c) The location of the fire extinguisher must be such that the distance of the fire extinguisher is at least 15 cm from the floor surface;

d) In a small corridor from the side of a non-working vestibule;

e) In a small corridor from the side of the working vestibule.

7.2.2 Fire extinguishing media used on rolling stock in the Russian Federation

The rules of fire safety on rolling stock in the Russian Federation are regulated by the government of the Russian Federation by the decree of September 16, 2020 N 1479 on the approval of the Rules for the fire regime in the Russian Federation.

Classification of fires federal law from 22.07.2008 N 123-FZ (ed. From 27.12.2018) "Technical regulations on fire safety requirements" .

a) Class A - combustion of solids.

1) A1 - smoldering substances (wood, paper, textiles)

2) A2 - non-smoldering substances (plastic)

b) Class B - combustion of flammable liquids.

c) Class C - fires provoked by gases.

d) Class D - combustion of metals.

e) Class E - burning of electrical installations under voltage.

f) Class F - combustion of radioactive waste and nuclear materials.

The Нормы for the provision of railway rolling stock with fire extinguishers are shown in Table 7.2.

Table 7.2 - Standards for the provision of railway rolling stock with fire extinguishers

Protected object name	Meter	Fire class	Number of fire extinguishers with the rank of extinguishing the model hearth (at least pieces)
Electric locomotives	section	A, E	2 - (2A, 55B, C, E) or 2 - (2A, 55B, E)
Diesel locomotives	section	A, B, E	2 - (2A, 55B, C, E) or 2 - (2A, 55B, E)
Gas turbine locomotives	section	AND ALL	2 - (2A, 55B, C, E)
Electric trains, diesel trains, diesel electric trains			

9-12-carriage	a train	A, B, E	6 - (2A, 55B, C, E) or 6 - (2A, 55B, E)
4-8-carriage	a train	A, B, E	4 - (2A, 55B, C, E)
Rail buses, railcars			
1-2-carriage	a train	A, B, E	2 - (2A, 55B, C, E) or 2 - (2A, 55B, E)
2-4-carriage	a train	A, B, E	4 - (2A, 55B, C, E)
Refrigerated sections	section	A, B, E	2 - (2A, 55B, C, E) or 2 - (2A, 55B, E)
Wagons for the carriage of passengers:			
with water or combined heating	railway carriage	A, B, E	1 - (2A, 55B, C, E), 2 - (34B, C, E)
with electric heating	railway carriage	A, B, E	2 - (2A, 55B, C, E), 2 - (34B, C, E)
Luggage, postage	railway carriage	A, B, E	2 - (2A, 55B, C, E), 1 - (34B, C, E) or 2 - (2A, 55B, E), 1 - (34B, C, E)
Restaurant cars	railway carriage	A, B, E	3 - (2A, 55B, C, E),
Double-deck wagons designed for the carriage of passengers	railway carriage	A, B, E	2 - (2A, 55B, C, E), 3 - (34B, C, E)
Double- deck carriages - restaurants	railway carriage	A, B, E	3 - (2A, 55B, C, E), 3 - (34B, C, E)

Carriages for service, technical, service, te sting and measuring laboratories	railway carriage	A, B, E	2 - (2A, 55B, C, E) or 2 - (2A, 55B, E)
Special railway rolling stock	railway carriage	A, B, E	2 - (2A, 55B, C, E) or 2 - (2A, 55B, E)

For the number of fire extinguishers with a model fire extinguishing grade, the numbers in the designation of the rank show the conditional dimensions of the fire that can be extinguished. The higher the number, the larger the size of the hearth can be extinguished. And the letters in the designation of the rank (A, B , C , D) show the classes of fire.

Recommended types and types of fire extinguishers for equipping buildings and vehicles are shown in Table 7.3.

Table 7.3 - Recommended types and types of fire extinguishers for equipping buildings and vehicles

№ п/п	Вид огнетушителя	Марка	Ранг тушения модельного очага пожара
Для жилых и общественных зданий			
1.	Порошковый	ОП-4(з)	2А, 55В, С, Е
2.	Воздушно-пенный	ОВП-8(з)	2А, 55В
3.	Углекислотный	ОУ-5	55В, С, Е
Для производственных и складских зданий и помещений категорий Г, Д			
Переносные огнетушители			
4.	Порошковый	ОП-4(з)	2А, 55В, С, Е
5.	Воздушно-пенный	ОВП-8(з)	2А, 55В
6.	Углекислотный	ОУ-5	55В, С, Е
Передвижные огнетушители			
7.	Порошковый	ОП-25(з)	6А, 233В, С, Е
8.	Порошковый	ОП-70(з)	10А, 233В, С, Е
9.	Углекислотный	ОУ-55	144В, С, Е
10.	Воздушно-пенный	ОВП-80(з)	6А, 233В
Для производственных и складских зданий и помещений категорий А, Б, В1-В4			
Переносные огнетушители			
11.	Порошковый	ОП-8(з)	4А, 144В, С, Е
Передвижные огнетушители			
12.	Порошковый	ОП-25(з)	6А, 233В, С, Е
13.	Порошковый	ОП-70(з)	10А, 233В, С, Е
14.	Углекислотный	ОУ-55	144В, С, Е
15.	Воздушно-пенный	ОВП-80(з)	6А, 233В
Для легковых автомобилей, автобусов, грузовых автомобилей с полной массой до 7,5 т			
16.	Порошковый	ОП-2(з)	0,7А, 21В, С, Е
17.	Углекислотный	ОУ-2	21В, С, Е
Для грузовых автомобилей с полной массой более 7,5 т, а также для перевозки опасных грузов (независимо от полной массы)			
18.	Порошковый	ОП-5(з)	2А, 89В, С, Е
19.	Углекислотный	ОУ-6	70В, С, Е

From table 7.2, the code of fire extinguishers for double-deck cars - 2 - (2A, 55B, C, E), 3 - (34B, C, E). The extinguishing grade of the model fire source of type 2A, 55B, C, E can be used with a powder fire extinguisher ОП - 4 (3), and for 34B, C, E, a carbon dioxide fire extinguisher ОУ-3 can be used.

Primary fire extinguishing means and their location in the carriage:

a) Carbon dioxide fire extinguisher ОУ-5. It extinguishes class B, C, E fires. Location: oblique corridor;

b) Air-emulsion fire extinguisher ОПУ-5. It extinguishes fires of class A, B, C, E. Location: small corridor. Installed instead of air-foam fire extinguishers (ОВП-5);

c) Generator of fire-extinguishing aerosol portable GOAP "Guard-3". It extinguishes fires of class A, B, C, E. Location : service compartment of the conductor;

d) Self-operating powder fire extinguisher ОСП-1. Extinguishes fires of class A, B, C, E. Location: switchboard, battery boxes;

e) Installation of water fire extinguishing. Extinguishes class A fires. Water supply: 90 liters. Location: oblique / small corridor.

8 Estimation of the cost of creating a double-deck passenger carriage for the railways of the Republic of Indonesia

In the section on economics, it compares the costs of building a double-deck car and purchasing a car abroad. The production of double-deck cars in Asia is even smaller than in Europe or America, only in China and Japan. The aim of the assignment in the economic part of the diploma is to find a good solution for the Republic of Indonesia. This section will compare the cost estimates for building double-deck wagons in the Republic of Indonesia. And he is considering which option is more economical if we buy from China (China is considered the cheapest manufacturer of wagons in the world) or in Russia.

8.1 Analysis of the cost of a double-decker carriage abroad

The construction of double-deck cars in China began in the 80s and production continues to this day. The products of double decker cars in China are used by stainless steel for its material. In 2017 SEPTA (Southeastern Pennsylvania Transportation Authority) ordered 45 double-decker cars worth 70 **million rubles** per carriage excluding shipping [17].

The cost of delivery from China to the United States costs 2.5 million rubles, that is, the price of one carriage is 72.5 million rubles, including certification, testing and development of cars. In accordance with the material used in the car building is stainless steel (in 2017, the price of steel was 187 thousand rubles per tonne). In other words, the price of a double-decker car in Russia is about **83 million rubles** . If he orders wagons from Russia to Indonesia, the delivery price is completely higher than China.

8.2 Cost Analysis of Building a Double Decker Wagon in Indonesia

In this project, the development of a double-decker passenger interregional carriage with aluminum material with seating was carried out, which consists in increasing the number of seats. The offered carriage has 120 seats. There are 84 seats in a single-deck carriage. The projected carriage will certainly be more productive than a single-deck stainless carriage. And also the choice of material,

including aluminum alloys, affects the economy of the construction of wagons, since the price of aluminum is six times cheaper than stainless steel.

The design of the double-deck carriage uses a sandwich panel. The sandwich panel for wagon construction consists of:

a) Aluminum cladding made of aluminum type 1915T. Aluminum 1915T is well deformed in hot and cold states and also has a fairly high yield point and corrosion resistance.

b) Filling the panel from expanded polystyrene. Expanded polystyrene is one of the elements of thermal insulation. In order to keep the temperature inside the car from the cold from the sun's rays, extruded polystyrene foam of the PSB-C type is used. This is a type of extruded polystyrene foam "self-extinguishing". In addition, the use of expanded polystyrene as the core of the sandwich panel also increases the strength of the sandwich system.

c) Epoxy adhesive. The connection between the aluminum cladding and the flooring, as well as for the installation of the sandwich panel between each other, will need cold welding or using glue. Epoxy adhesive is used in both linings and both filler surfaces.

d) Steel 10G2B is used for the construction of the car frame. Steel 10G2B has a fairly good yield point.

The choice of aluminum 1915T has a fairly high yield point in the limit of 100 MPa. In 2020, the price of aluminum is 176 thousand rubles. per ton [2].

The design of the sandwich panel in the car, in addition to aluminum, also needs to be considered its filler - expanded polystyrene Type 45 - material density 38-45 kg / m^3 and epoxy glue for inserting filled aluminum sheets. The price of the filler is 1400 rubles / m^3 . The price of epoxy glue costs 950 rubles per kg.

In addition to aluminum, an important choice of material for the car frame is also 10Г2Б carbon steel. In 2020, the price of carbon steel costs 46 thousand rubles per ton [3].

Then, we calculate the cost of the internal equipment for the wagons. Evaluation of the results of all the cost of internal equipment is 3,12 million rubles.

The cost estimate for the construction of a double-deck car is shown in Table 8.1.

Table 8.1 - Estimation of the cost when building a double-deck car

No.	Name	Qty	price, rub.
	Materials		
1	Aluminum alloys 1915 T	3.5 t	617 000
2	Expanded polystyrene (XPS)	1.5 t	122 000
3	Epoxy adhesive (Avian / Dextone)	0.5 t	520 000
4	Steel 10G2B	4 t	340 000
5	Indoor equipments		
6	Water supply	1 PC	75 000
7	Restroom	2 pcs	100 000
8	Window	36 pcs	188 000
9	Doors	6 pcs	120 000
10	Seating	120 pcs	910 000
11	Fire safety device	2 pcs	50 000
12	Seats for conductors	1 PC	20 000
13	Cooler	2 pcs	20,000
14	Luggage space	11 pcs	20 000
15	Air conditioning	2 pcs	1 557 000
16	Lighting	24 pcs	80 000
17	Truck	2 pcs	516 1 000
18	Braking equipment	1 PC	1 212 800

19	Car couplings	2 pcs	1,137,000
20	Labor intensity	1000 h	26 462 000
21	Development and testing cost	/ 500 cars	30 000 000 (60 000)
22	Other		5 000 000
	Total		40 126 8 00

The development cost, taking into account preliminary tests, is about 30 million rubles, 60.000 rubles / batch (the price is taken at the Russian price) [18]. The cost of certification of a passenger car is within 4 million rubles. We take the cost of development and certification at the Russian price. The price is accepted at the Russian price) [19]. Based on the calculation, the cost of building wagons in Indonesia is 1,5 - 2 times cheaper than purchasing it in Russia or China (delivery is not included).

Conclusion

The purpose of the final qualifying work was to develop a double-deck passenger carriage for the railways of the Republic of Indonesia. In accordance with the plan to transfer the capital of Indonesia in 2024, a new railway was built on the island of Kalimantan, where a new generation of rolling stock with improved technical and economic parameters should be used. Double-deck passenger carriages allow increasing the number of passengers carried on a train without increasing its length, that is, without additional investments in infrastructure.

In the diploma project, the design of a double-deck passenger carriage with a sandwich-type body was developed, which is distinguished by its low weight, which allows the body to be used for an articulated passenger train. The materials used are sandwich panel, which is a more modern choice of material. Technical requirements (ГОСТ Р 55182 - 2012) for passenger cars were given, and a calculation was made for the strength, stability and frequency of the body's own vibration of the designed car. The developed car meets the technical requirements, the strength of the body meets the requirements of "Норм ..." in the first and third design modes, stability and vibration frequency.

In the labor protection section, an analysis was made of the use of materials for thermal insulation, the use of fire safety and a comparison of fire extinguishing agents used on rolling stock in Indonesia and in the Russian Federation

In the economics section, estimates were made of the cost of building a double-deck carriage in Indonesia and a comparison between carriages purchased in Indonesia and abroad. Based on the data obtained, it was concluded that the development of a car in Indonesia is more economical than its acquisition in other countries .

Appendix A

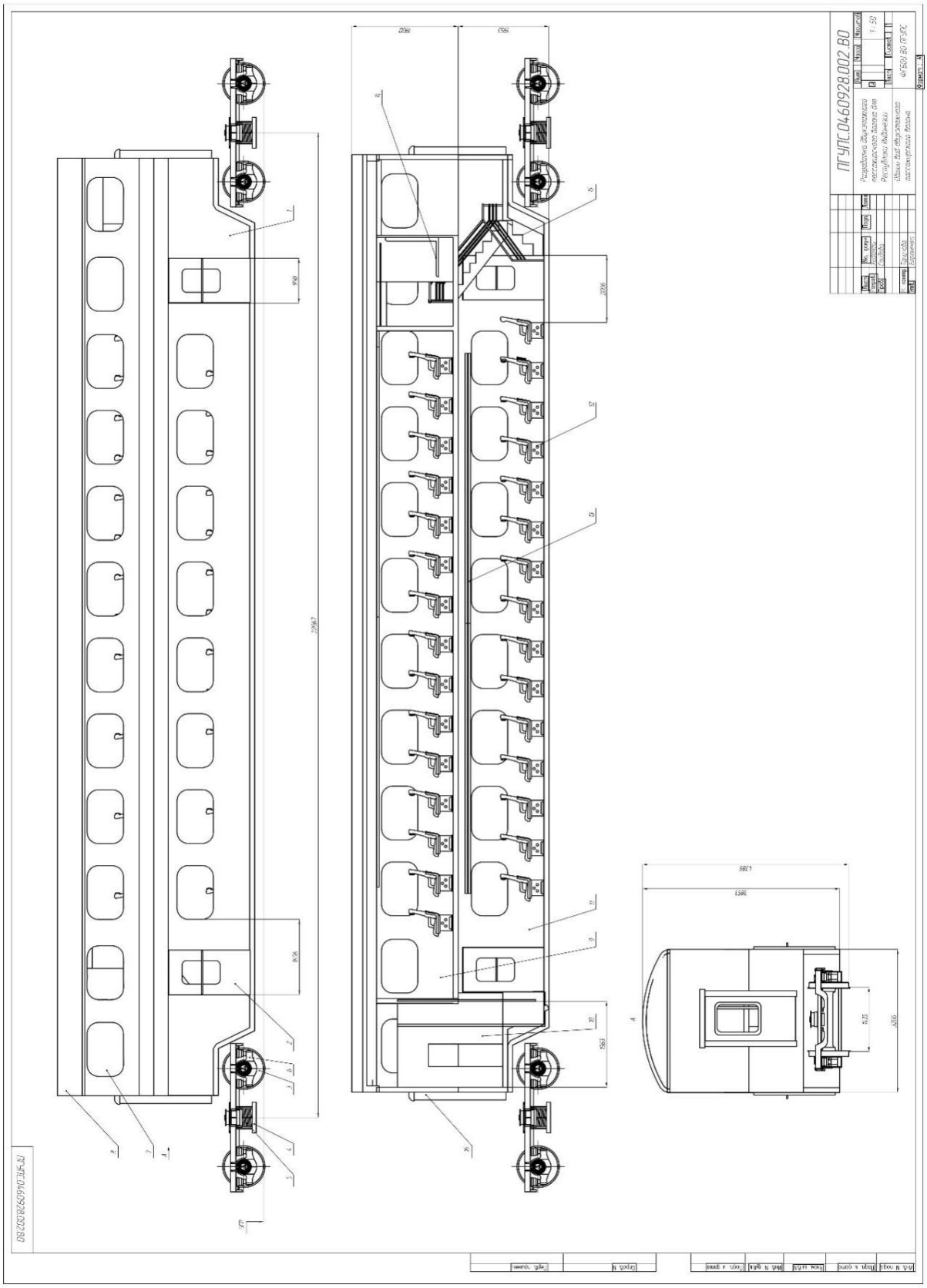

Figure A.1 - General view drawing of a double-deck car

Format	Zone	Pos.	Symbol	Name	Qty.	Note
				Dokumentation		
A3			003	General drawing		
				Name		
1				Car body	1	
2				Side doors	4	
3				Wheelsets	4	
4				Bogie bolster	2	
5				Bogie springs	16	
6				Suspension	16	
7				Window	20	
8				Car roof	1	
9				Second tier	1	
10				Toilet	2	
11				First tier	1	
12				Passenger seats	120	
13				Luggage space	8	
14				Cabinet for passengers	1	
15				Ladder	1	
16				End doors	2	

Перв. примен. | Справ N | Подп. и дата | Инв. N дубл. | Взам. инв. N | Подп. и дата | Инв. N подл.

Изм	Лист	N Докум	Подп	Дата
Разраб.		Хидаяти		
Пров.		Саидова		
Принял.				
Н. контр.		Таничева		
Утв.		Бороненко		

ПГУПС.0460928.003

General view of a bilevel passenger car

Лит.	Лист	Листов
и	1	1

ФГБОУ ВО ПГУПС

Figure A.2 - Specification of the drawing of a general view of a double-deck car

Appendix B

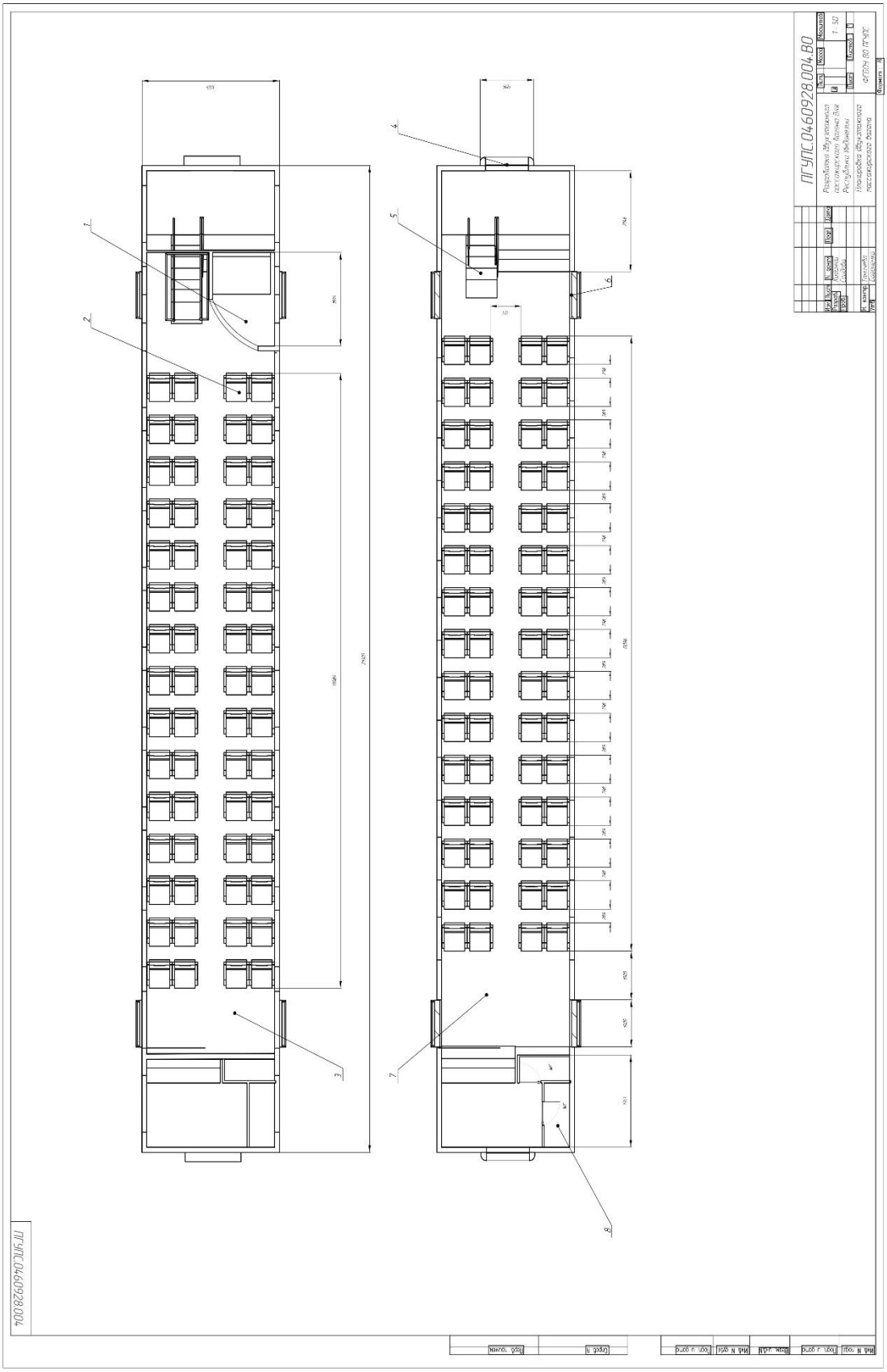

Figure B.1 - Drawing of the layout of a double-deck car

Format	Zone	Pos.	Symbol	Name	Qty.	Note
				Dokumentation		
A3			005	General drawing		
				Name		
1				Cabinet for the conductors	1	
2				Passenger seats	120	
3				Second tier	1	
4				End doors	2	
5				Ladder	1	
6				Side doors	4	
7				First tier	1	
8				Toilet	2	

Перв. примен.

Справ N

Подп. и дата

Инв. N дубл.

Взам. инв. N

Подп. и дата

Инв. N подл.

Изм.	Лист	N Докум	Подп	Дата
Разраб.		Хидаяти		
Пров.		Саидова		
Принял.				
Н. контр.		Таничева		
Утв.		Бороненко		

ПГУПС.0460928.005

Layout of a bilevel passenger car

Лит.	Лист	Листов
и	1	1

ФГБОУ ВО ПГУПС

Figure B.2 - Specification of the drawing of the layout of a double-deck car

Appendix C

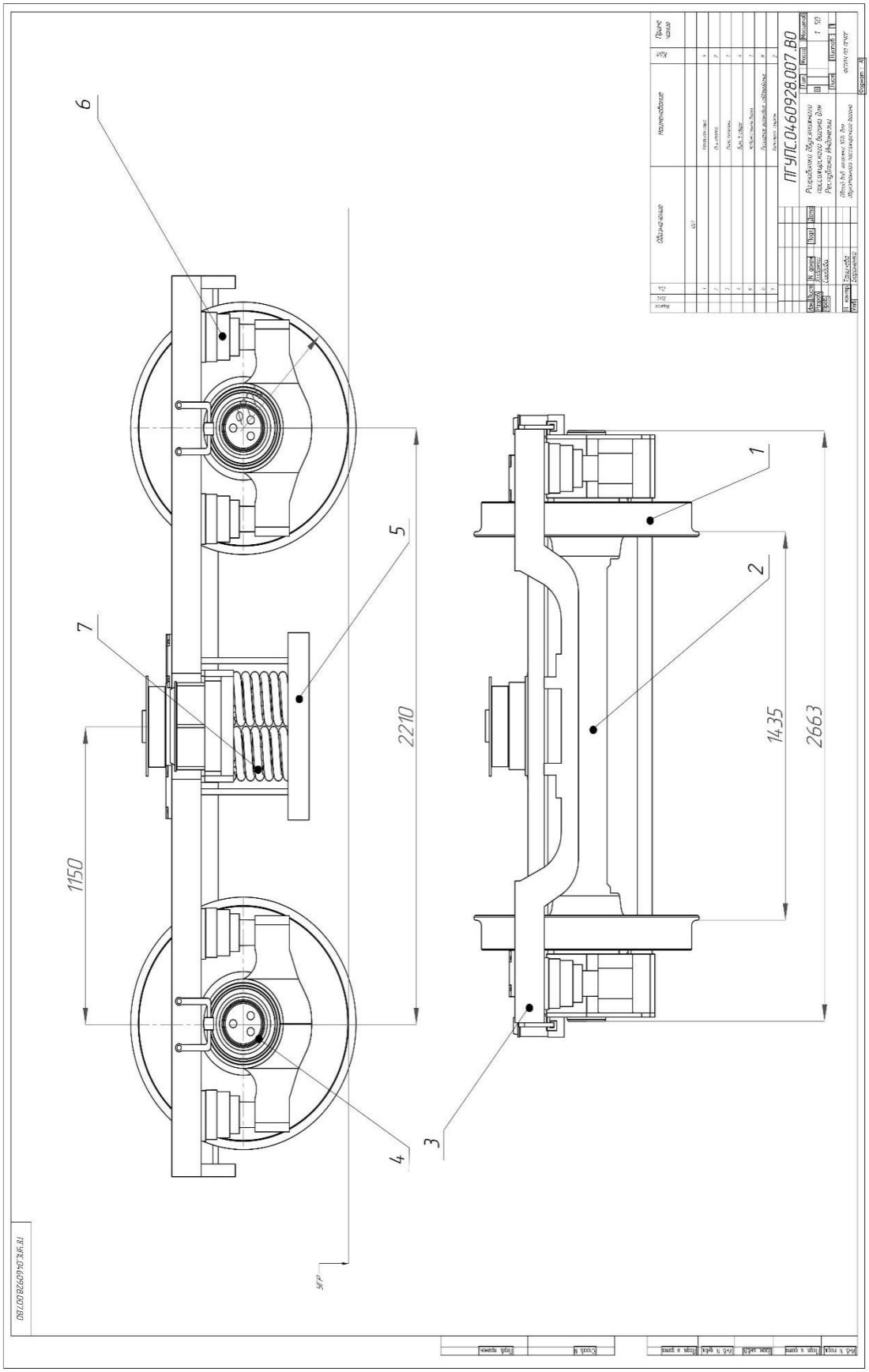

Figure B.1 - Drawing of bogie type 1014

Appendix D

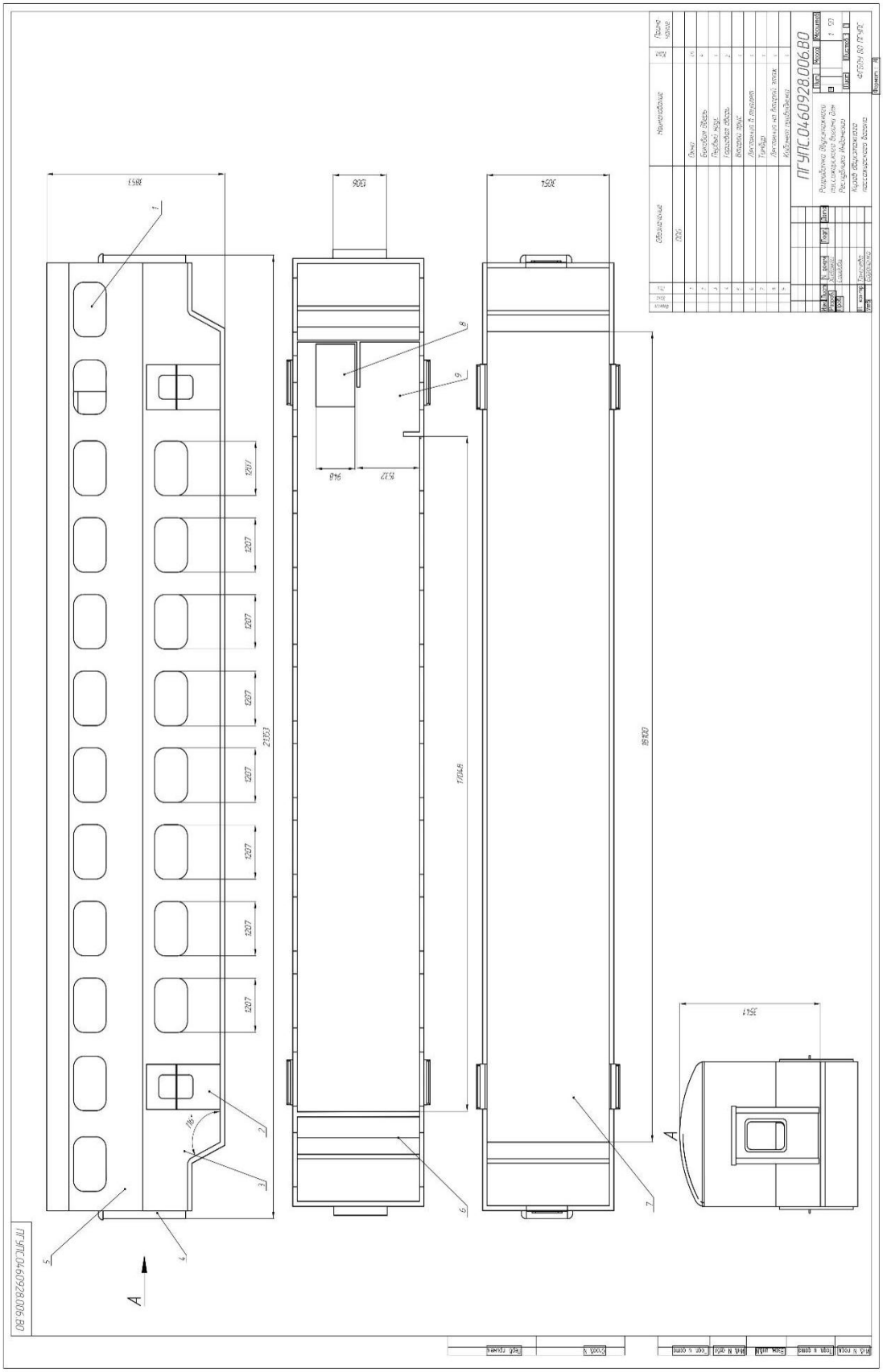

Figure D.1 - Drawing of the car body