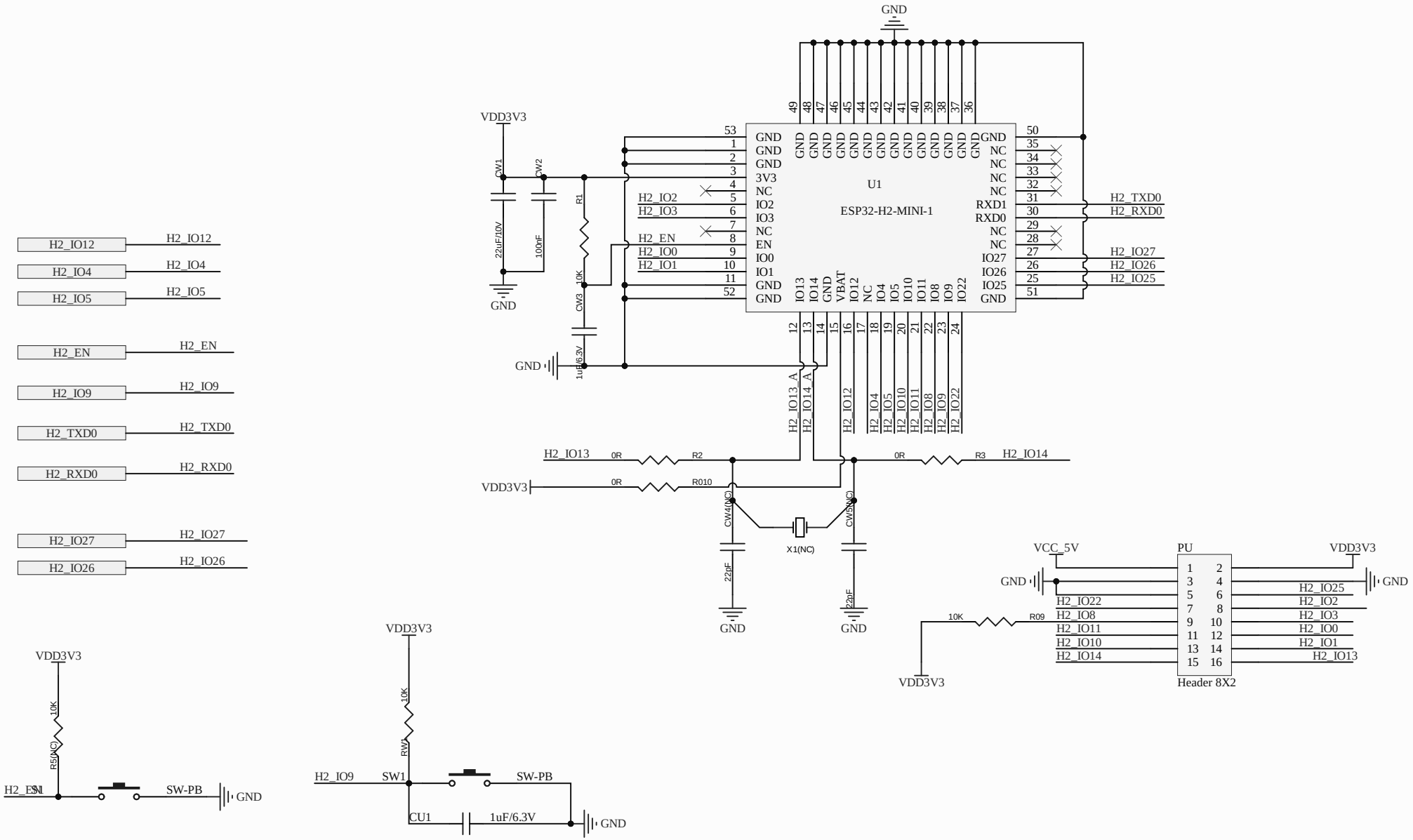
U1
ESP32-H2-MINI-1
GND
VDD3V3
CW1
CW2
22uF/10V
100nF
R1
10K
CW3
1uF/6.3V
H2_IO2
H2_IO3
H2_EN
H2_IO0
H2_IO1
H2_TXD0
H2_RXD0
H2_IO27
H2_IO26
H2_IO25
H2_IO12
H2_IO4
H2_IO5
H2_IO9
H2_IO13_A
H2_IO14_A
H2_IO13
H2_IO14
0R
R2
R3
R010
CW4(NC)
CW5(NC)
X1(NC)
22pF
VCC_5V
PU
Header 8X2
H2_IO22
H2_IO8
H2_IO11
H2_IO10
H2_IO25
H2_IO2
H2_IO3
H2_IO0
H2_IO1
R09
R5(NC)
SW1
SW-PB
CU1

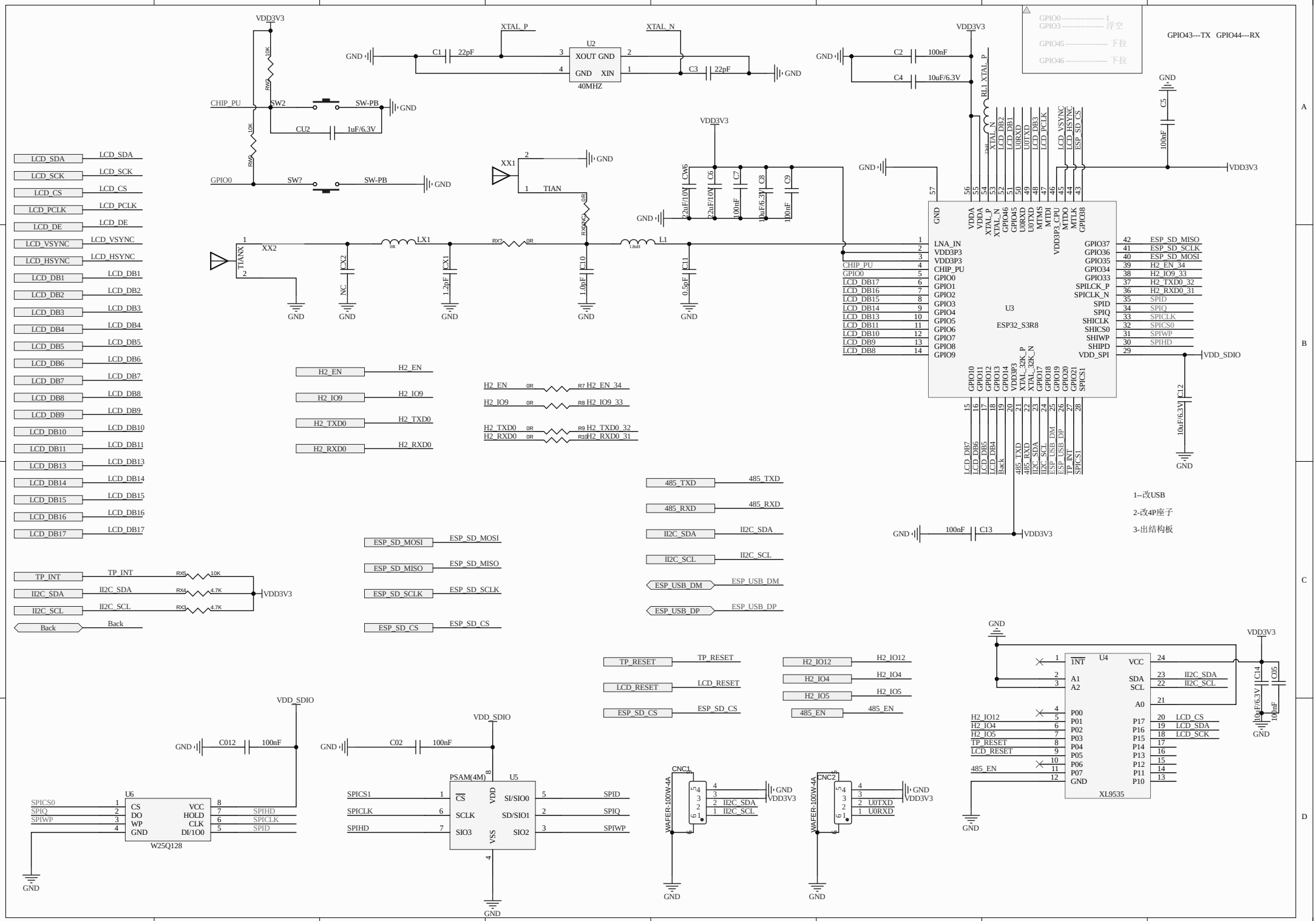
GPIO0 1
GPIO3 浮空
GPIO45 下拉
GPIO46 下拉
GPIO43---TX GPIO44---RX
VDD3V3
XTAL_P
XTAL_N
U2
XOUT GND
GND XIN
40MHZ
C1 22pF
C3 22pF
C2 100nF
C4 10uF/6.3V
RL1 XTAL_P
CHIP_PU
SW2
SW-PB
CU2 1uF/6.3V
GPIO0
SW?
XX1
TIAN
XX2
TIANX
LX1
L1
1.8uH
C5 100nF
C6 22uF/10V
C7 100nF
C8 10uF/6.3V
C9 100nF
C10 1.0nF
C11 0.5pF
C12 10uF/6.3V
C13 100nF
CX1 1.2pF
CX2 NC
U3
ESP32_S3R8
LNA_IN
VDD3P3
CHIP_PU
GPIO0
GPIO1
GPIO2
GPIO3
GPIO4
GPIO5
GPIO6
GPIO7
GPIO8
GPIO9
GPIO37
GPIO36
GPIO35
GPIO34
GPIO33
SPILCK_P
SPICLK_N
SPID
SPIQ
SHICLK
SHICS0
SHIWP
SHIPD
VDD_SPI
ESP_SD_MISO
ESP_SD_SCLK
ESP_SD_MOSI
H2_EN_34
H2_IO9_33
H2_TXD0_32
H2_RXD0_31
SPID
SPIQ
SPICLK
SPICS0
SPIWP
SPIHD
VDD_SDIO
LCD_SDA
LCD_SCK
LCD_CS
LCD_PCLK
LCD_DE
LCD_VSYNC
LCD_HSYNC
LCD_DB1
LCD_DB2
LCD_DB3
LCD_DB4
LCD_DB5
LCD_DB6
LCD_DB7
LCD_DB8
LCD_DB9
LCD_DB10
LCD_DB11
LCD_DB13
LCD_DB14
LCD_DB15
LCD_DB16
LCD_DB17
H2_EN
H2_IO9
H2_TXD0
H2_RXD0
R7 H2_EN_34
R8 H2_IO9_33
R9 H2_TXD0_32
R10 H2_RXD0_31
485_TXD
485_RXD
II2C_SDA
II2C_SCL
ESP_USB_DM
ESP_USB_DP
TP_INT
Back
RX5 10K
RX4 4.7K
RX3 4.7K
1--改USB
2-改4P座子
3-出结构板
TP_RESET
LCD_RESET
ESP_SD_CS
H2_IO12
H2_IO4
H2_IO5
485_EN
U4
XL9535
INT
A1
A2
P00
P01
P02
P03
P04
P05
P06
P07
GND
VCC
SDA
SCL
A0
P17
P16
P15
P14
P13
P12
P11
P10
C14 10uF/6.3V
C05 100nF
C012 100nF
C02 100nF
U6
W25Q128
CS
DO
WP
GND
VCC
HOLD
CLK
DI/1O0
U5
PSAM(4M)
CS
SCLK
SIO3
VDD
VSS
SI/SIO0
SD/SIO1
SIO2
CNC1
CNC2
WAFER-100W-4A
II2C_SDA
II2C_SCL
U0TXD
U0RXD

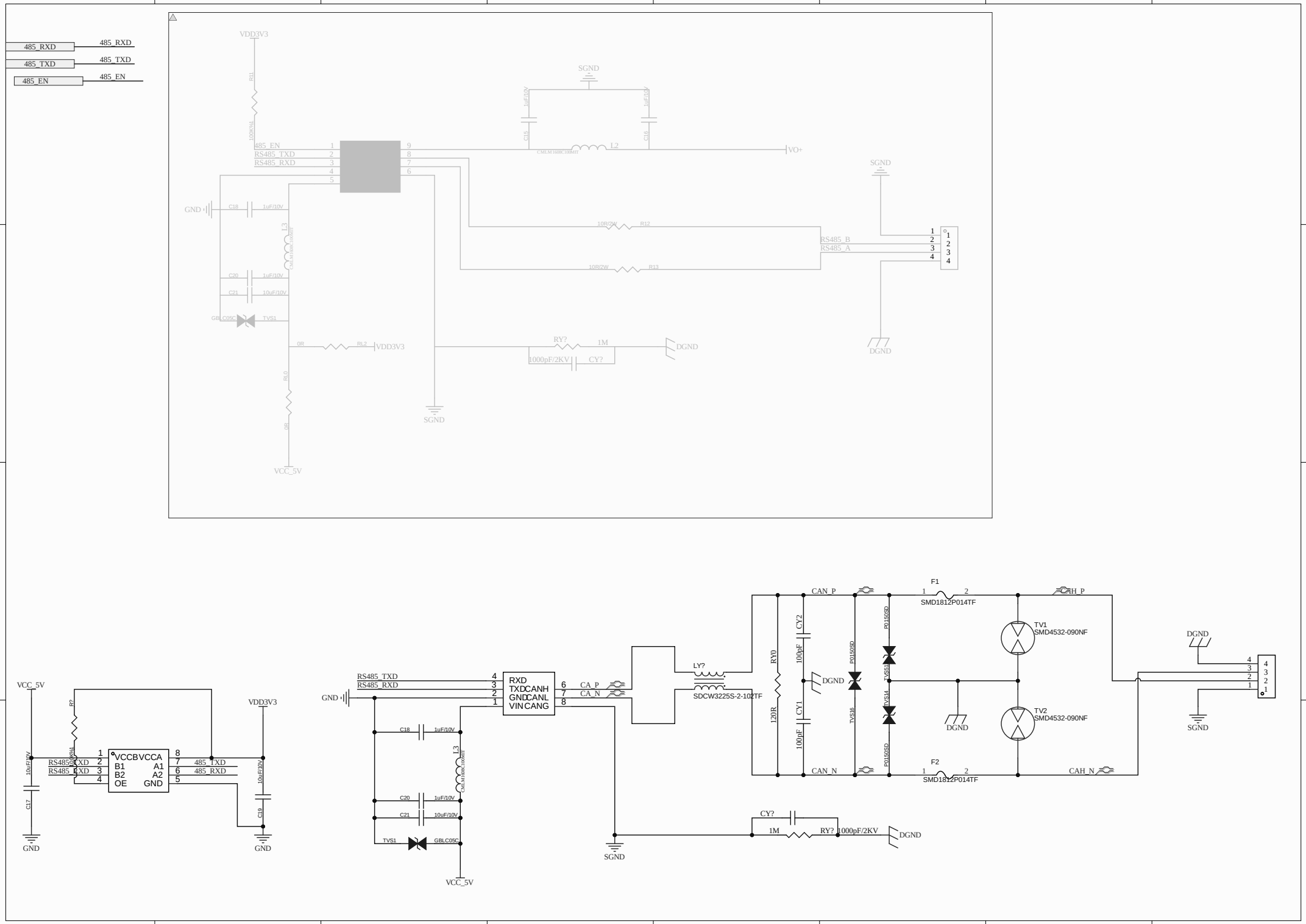
485_RXD
485_TXD
485_EN
VDD3V3
R11
100K/0603
SGND
C15
C16
1uF/10V
L2
CMLM1608C100MIT
VO+
485_EN
RS485_TXD
RS485_RXD
GND
C18
L3
C20
C21
10uF/10V
GBLC05C
TVS1
0R
RL2
RL0
VCC_5V
10R/2W
R12
R13
RS485_B
RS485_A
RY?
1M
1000pF/2KV
CY?
DGND
VCC
B1
B2
OE
VCCB
A1
A2
GND
VCCA
R?
C17
C19
CA_P
CA_N
LY?
SDCW3225S-2-102TF
120R
CY2
CY1
100pF
P0150SD
TVS16
TVS14
F1
F2
SMD1812P014TF
CAN_P
CAN_N
CAH_P
CAH_N
TV1
TV2
SMD4532-090NF

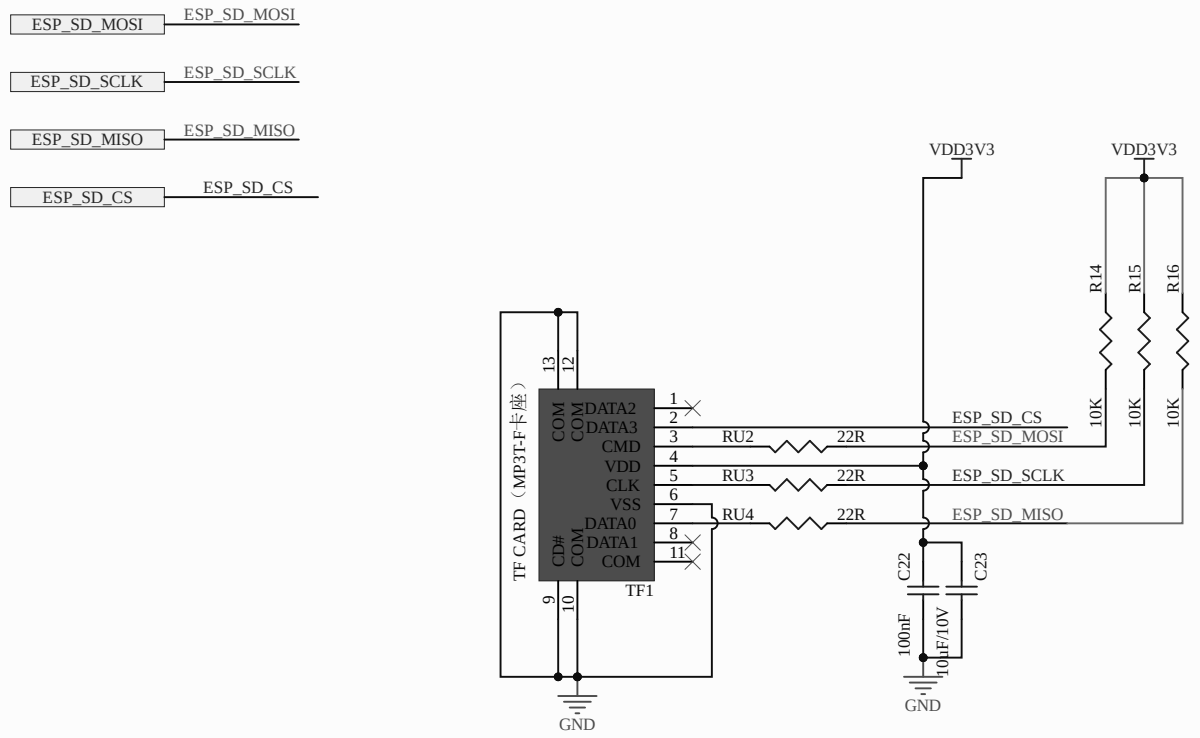
ESP_SD_MOSI
ESP_SD_MOSI
ESP_SD_SCLK
ESP_SD_SCLK
ESP_SD_MISO
ESP_SD_MISO
ESP_SD_CS
ESP_SD_CS
VDD3V3
VDD3V3
R14
R15
R16
10K
10K
10K
TF CARD（MP3T-F卡座）
13
12
COM
COM
DATA2
DATA3
CMD
VDD
CLK
VSS
DATA0
DATA1
COM
CD#
COM
1
2
3
4
5
6
7
8
11
9
10
TF1
RU2
22R
RU3
22R
RU4
22R
ESP_SD_CS
ESP_SD_MOSI
ESP_SD_SCLK
ESP_SD_MISO
C22
C23
100nF
10uF/10V
GND
GND

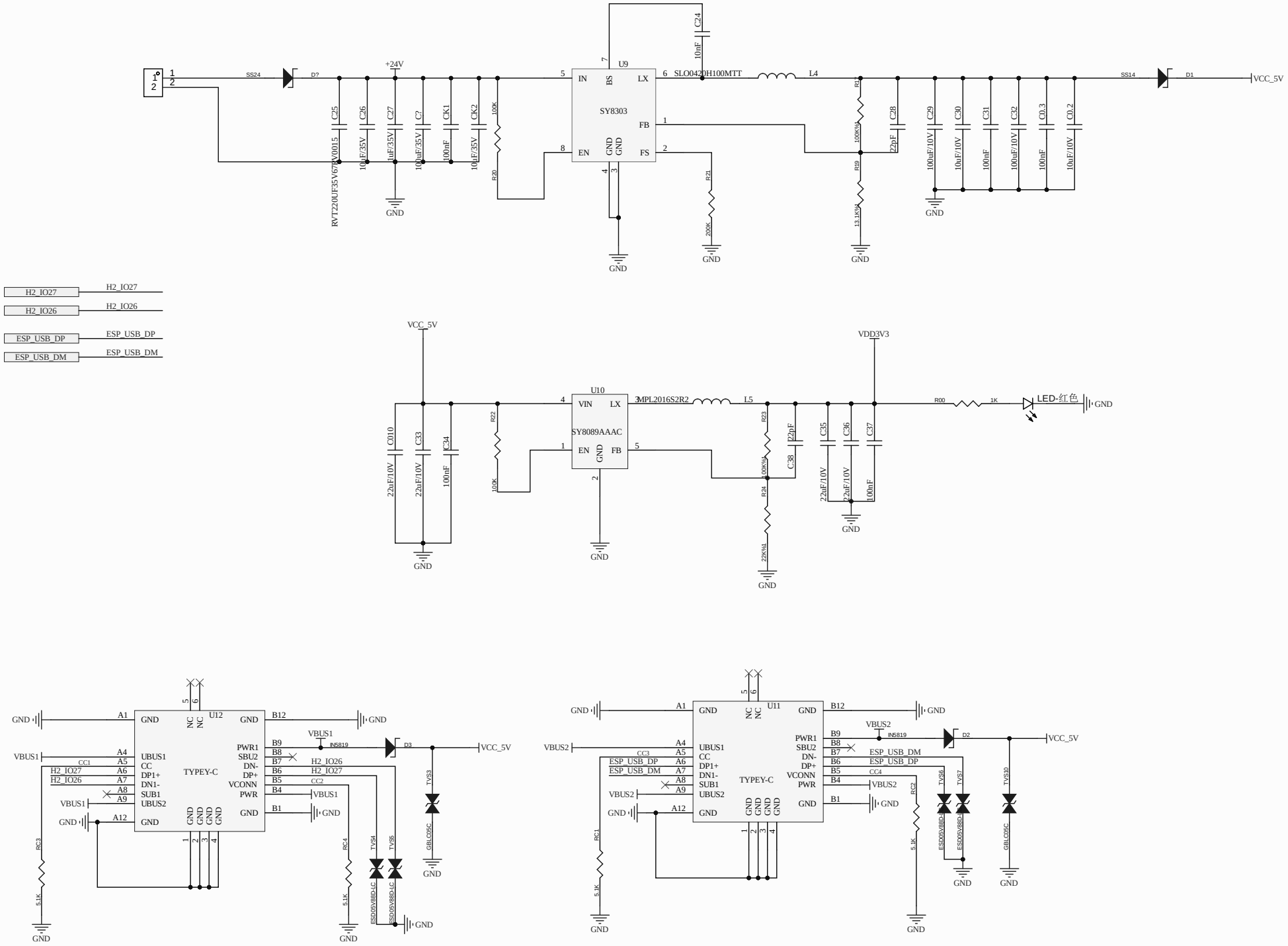
U9
SY8303
IN
BS
LX
FB
EN
GND
FS
SLO0420H100MTT
L4
+24V
VCC_5V
SS24
SS14
D1
D?
RVT220UF35V678V0015
GND
H2_IO27
H2_IO26
ESP_USB_DP
ESP_USB_DM
U10
SY8089AAAC
VIN
LX
EN
GND
FB
MPL2016S2R2
L5
VDD3V3
LED-红色
R00
1K
U12
TYPEY-C
GND
NC
UBUS1
CC
DP1+
DN1-
SUB1
UBUS2
PWR1
SBU2
DN-
DP+
VCONN
PWR
VBUS1
VBUS2
IN5819
D3
D2
CC1
CC2
CC3
CC4
RC1
RC2
RC3
RC4
5.1K
TVS3
TVS4
TVS5
TVS6
TVS7
TVS10
ESD05V88D-LC
GBLC05C

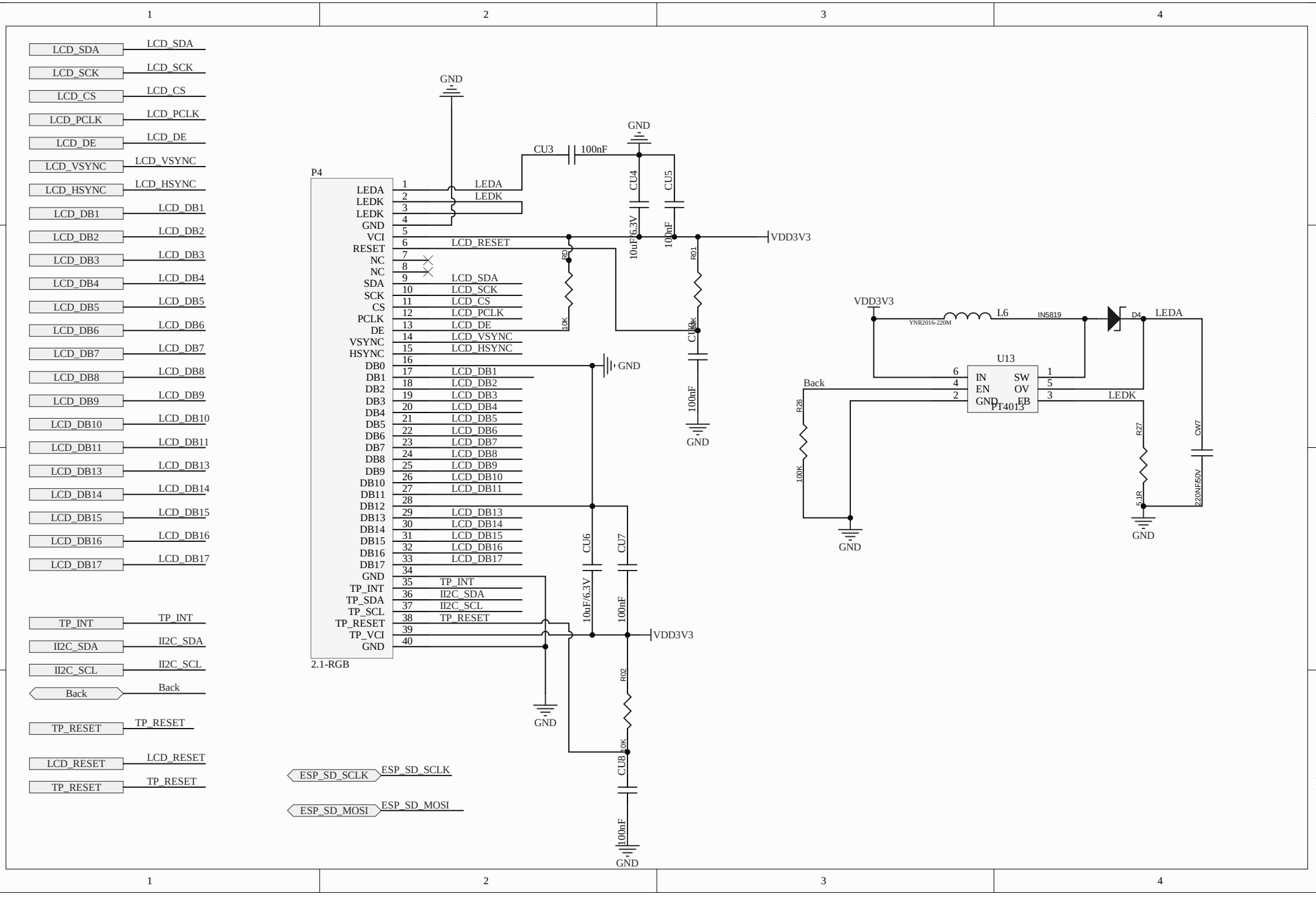
LCD_SDA
LCD_SCK
LCD_CS
LCD_PCLK
LCD_DE
LCD_VSYNC
LCD_HSYNC
LCD_DB1
LCD_DB2
LCD_DB3
LCD_DB4
LCD_DB5
LCD_DB6
LCD_DB7
LCD_DB8
LCD_DB9
LCD_DB10
LCD_DB11
LCD_DB13
LCD_DB14
LCD_DB15
LCD_DB16
LCD_DB17
TP_INT
II2C_SDA
II2C_SCL
Back
TP_RESET
LCD_RESET
TP_RESET
GND
CU3
100nF
CU4
CU5
10uF/6.3V
100nF
VDD3V3
P4
LEDA
LEDK
LCD_RESET
RD
10K
R01
CU0
100nF
LCD_SDA
LCD_SCK
LCD_CS
LCD_PCLK
LCD_DE
LCD_VSYNC
LCD_HSYNC
LCD_DB1
LCD_DB2
LCD_DB3
LCD_DB4
LCD_DB5
LCD_DB6
LCD_DB7
LCD_DB8
LCD_DB9
LCD_DB10
LCD_DB11
LCD_DB13
LCD_DB14
LCD_DB15
LCD_DB16
LCD_DB17
TP_INT
II2C_SDA
II2C_SCL
TP_RESET
2.1-RGB
CU6
CU7
10uF/6.3V
100nF
R02
10K
CU8
100nF
ESP_SD_SCLK
ESP_SD_MOSI
VDD3V3
L6
YNR2016-220M
IN5819
D4
LEDA
U13
IN
EN
GND
SW
OV
FB
PT4013
Back
LEDK
R26
100K
R27
5.1R
CW7
220NF-50V

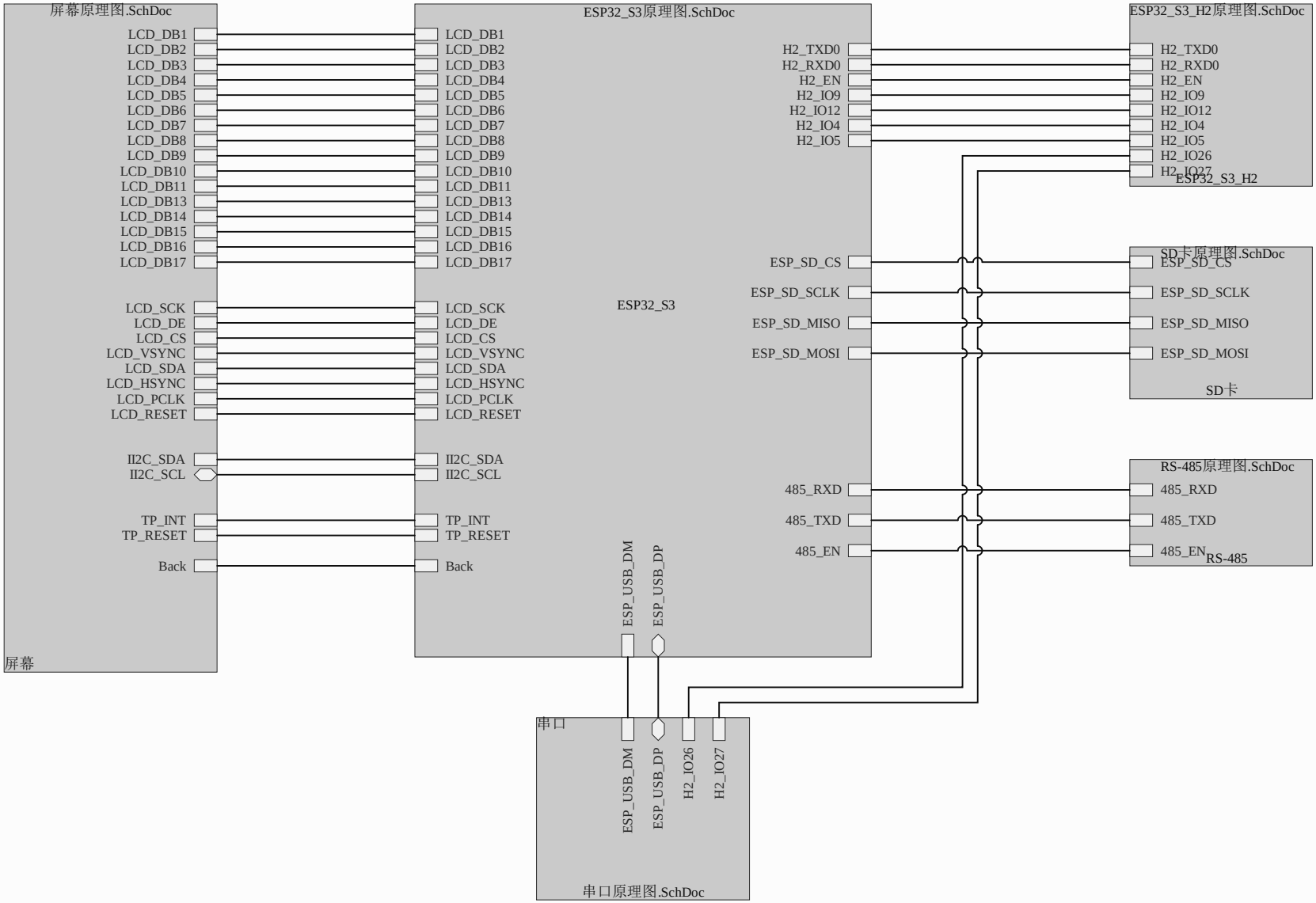
屏幕原理图.SchDoc
LCD_DB1
LCD_DB2
LCD_DB3
LCD_DB4
LCD_DB5
LCD_DB6
LCD_DB7
LCD_DB8
LCD_DB9
LCD_DB10
LCD_DB11
LCD_DB13
LCD_DB14
LCD_DB15
LCD_DB16
LCD_DB17
LCD_SCK
LCD_DE
LCD_CS
LCD_VSYNC
LCD_SDA
LCD_HSYNC
LCD_PCLK
LCD_RESET
II2C_SDA
II2C_SCL
TP_INT
TP_RESET
Back
屏幕
ESP32_S3原理图.SchDoc
ESP32_S3
H2_TXD0
H2_RXD0
H2_EN
H2_IO9
H2_IO12
H2_IO4
H2_IO5
ESP_SD_CS
ESP_SD_SCLK
ESP_SD_MISO
ESP_SD_MOSI
485_RXD
485_TXD
485_EN
ESP_USB_DM
ESP_USB_DP
ESP32_S3_H2原理图.SchDoc
H2_IO26
H2_IO27
ESP32_S3_H2
SD卡原理图.SchDoc
SD卡
RS-485原理图.SchDoc
RS-485
串口
串口原理图.SchDoc