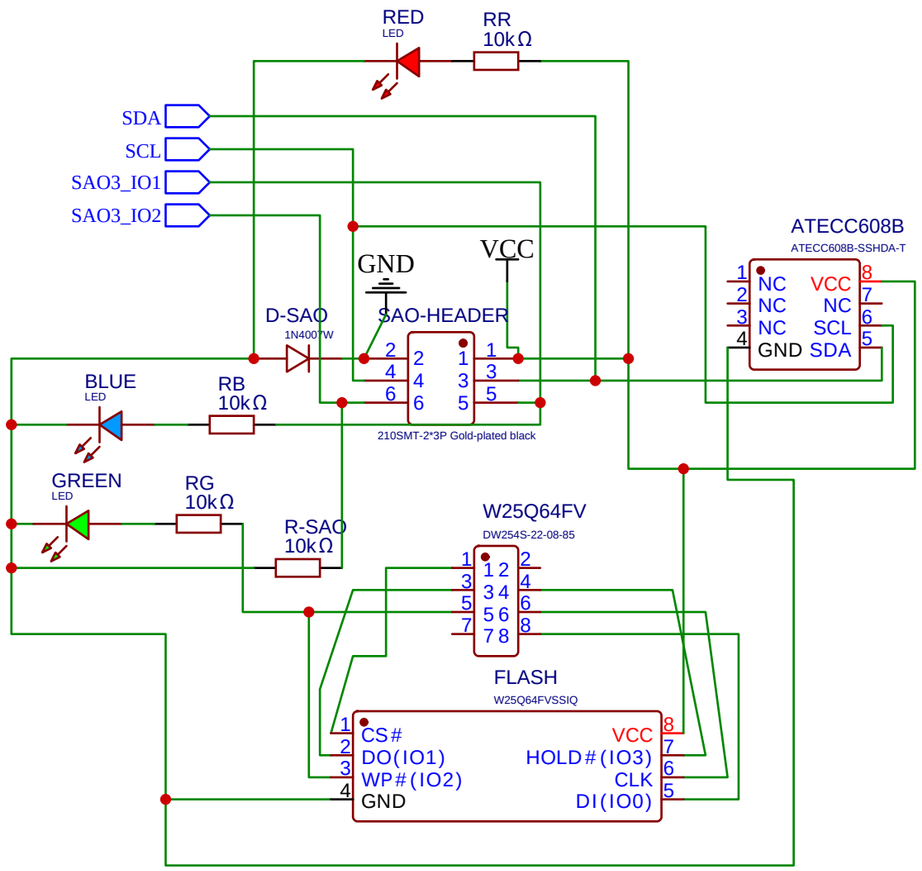

TITLE: CTF ADDON 2024		REV: 1.0
EasyEDA	Company: NorthSec	Sheet: 1/1
	Date: 2024-01-19 Drawn By: jmarcil	