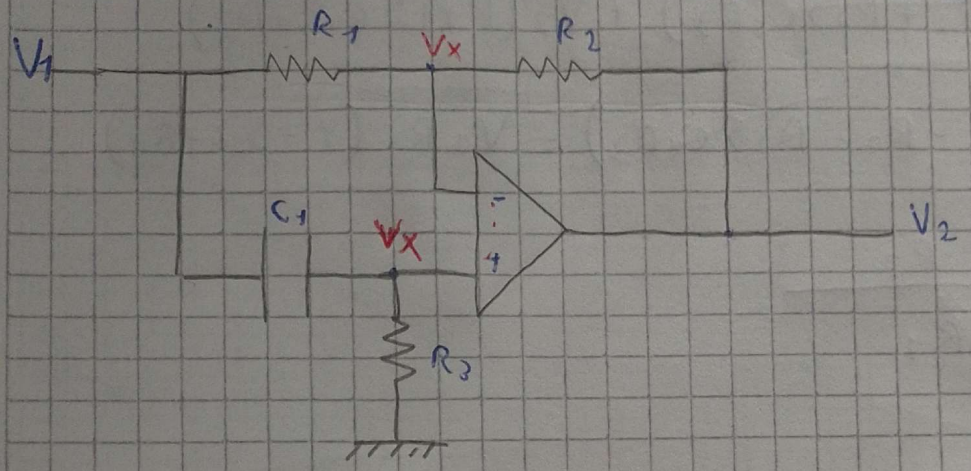

$$\begin{cases} \text{I} & (V_1 - V_x)\,sC_1 = \dfrac{V_x}{R_3} \\ \text{II} & \dfrac{V_1 - V_x}{R_1} = \dfrac{V_x - V_2}{R_2} \end{cases}$$

I $$V_1 sC_1 = V_x\left(\frac{1}{R_3} + sC_1\right)$$

$$V_1 sC_1 = V_x\left(\frac{1 + sC_1R_3}{R_3}\right)$$

II $$\frac{V_1}{R_1} + \frac{V_2}{R_2} = V_x\left(\frac{1}{R_2} + \frac{1}{R_1}\right)$$

$$\frac{V_1R_2 + V_2R_1}{\cancel{R_1R_2}} = V_x\,\frac{R_1 + R_2}{\cancel{R_2R_1}}$$

$$V_x = \frac{V_1R_2 + V_2R_1}{R_1 + R_2}$$

Papel de fibra de caña de azúcar.

Escaneado con CamScanner

$$\Rightarrow V_1 S C_1 = \frac{V_1 R_2 + V_2 R_1}{R_1 + R_2}\left(\frac{1 + S C_1 R_3}{R_3}\right)$$

$$V_1 S C_1 (R_1 + R_2) R_3 = (V_1 R_2 + V_2 R_1)(1 + S C_1 R_3)$$

$$V_1 S C_1 R_3 (R_1 + R_2) = V_1 R_2 + V_1 R_2 S C_1 R_3 + V_2 R_1 + V_2 R_1 S C_1 R_3$$

$$V_1 S C_1 R_3 (R_1 + R_2) = V_1 (R_2 + R_2 S C_1 R_3) + V_2 (R_1 + S R_1 C_1 R_3)$$

$$V_1 (S C_1 R_3 R_1 + \cancel{S C_1 R_3 R_2} - R_2 - \cancel{R_2 S C_1 R_3}) = V_2 R_1 (1 + S C_1 R_3)$$

$$\frac{V_2}{V_1} = \frac{S C_1 R_3 R_1 - R_2}{R_1 + S C_1 R_3 R_1}$$

$$\frac{V_2}{V_1} = \frac{S - \frac{R_2}{C_1 R_3 R_1}}{S + \frac{1}{C_1 R_3}} \quad //$$

$$H(jw) = \frac{jw - \frac{R_2}{C_1 R_3 R_1}}{jw + \frac{1}{C_1 R_3}}$$

$$|H(jw)| = \frac{\sqrt{w^2 + \left(\frac{R_2}{C_1 R_3 R_1}\right)^2}}{\sqrt{w^2 + \left(\frac{1}{C_1 R_3}\right)^2}} \quad //$$

$w = 0 \Rightarrow \frac{R_2}{R_1}$

$w \to \infty \Rightarrow 1$

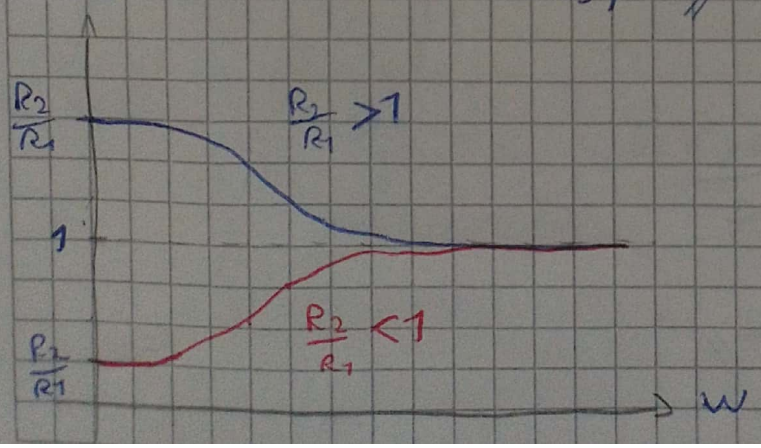

$$\measuredangle H(jw) = \measuredangle H = tg^{-1}\left(\frac{w}{-\frac{R_2}{C_1 R_3 R_1}}\right) - tg^{-1}\left(\frac{w}{\frac{1}{C_1 R_3}}\right)$$

$$\measuredangle H = tg^{-1}\left(-\frac{w\, C_1 R_3 R_1}{R_2}\right) - tg^{-1}\left(w C_1 R_3\right)$$

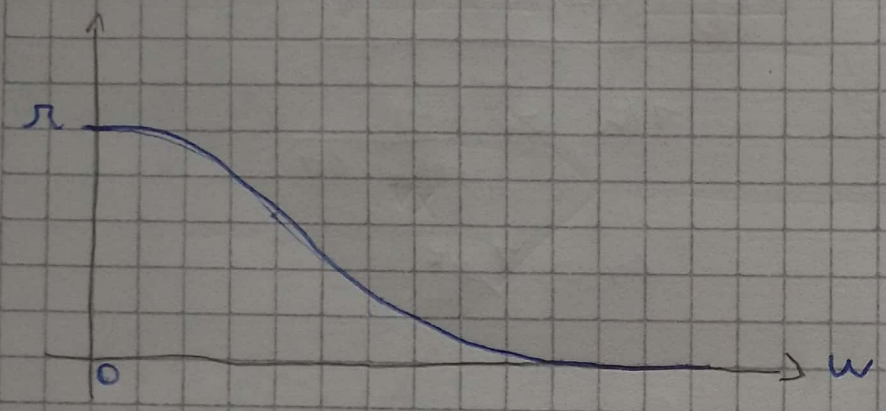

Polo en $-\frac{1}{C_1 R_3}$
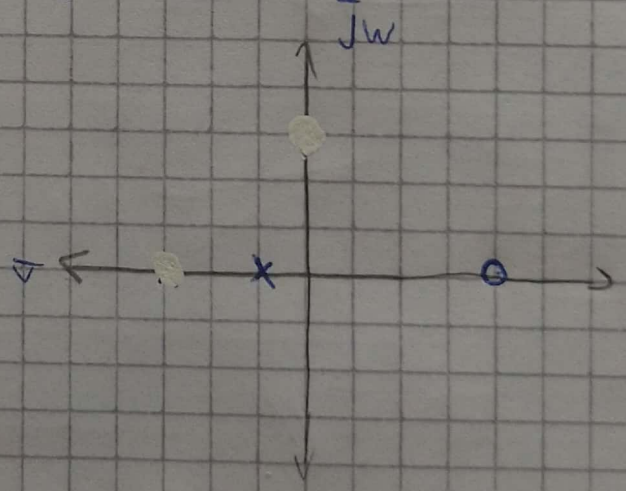
Cero en $\frac{R_2}{C_1 R_3 R_1}$