Group 5: Lidar Sensor

Christopher Ruiz-Guerra
Nabil Alhamal
Nahom Solomon

Project Description

- Arduino (microcontroller) reads data from Lidar Sensor
  - Uses two pins (SDA, and SCL to communicate) with controller
  - Calculates the distance between module and target
- Sensor reads via a laser start pulse and return time.
  - Operating range from 0.2-8m
  - Margin Of Error
    - ±6cm from (0.2m-3m)
    - ±2% from (3m-8m)
- Arduino outputs result to LCD in centimeters

BOM

On-Hand?	Item Description	Lead time (weeks)	Qty	Unit Price	Total Price
y	ELEGOO UNO R3 Board ATmega328P	1	1	$16.99	$16.99
	Benewake TF-Luna LiDAR Module	1	1	$26.59	$26.59
	400 Points Solderless Breadboard	1	1	$6.69	$6.69
y	120pcs Breadboard Jumper Wires	1	1	$6.98	$6.98
y	1602 Serial LCD Module Display	1	1	$9.99	$9.99
y	9V Battery	1	1	$3.00	$3.00
	9V Battery Holder	0	1	$2.25	$2.25
	Ammo Box (housing)	0	1	$5.99	$5.99
	Push button	0	1	$1.33	$1.33
y	Crimp Pins Housing (6 pin male header)	0	1	$0.02	$0.02
	Crimp Pins (male pins)	0	6	$0.02	$0.12
y	Stand-offs	0	12	$0.03	$0.34
y	M2 screws	0	12	$0.03	$0.34
				subtotal	**$43.54**
				tax	**$4.68**
				total	**$48.22**

Block Diagram

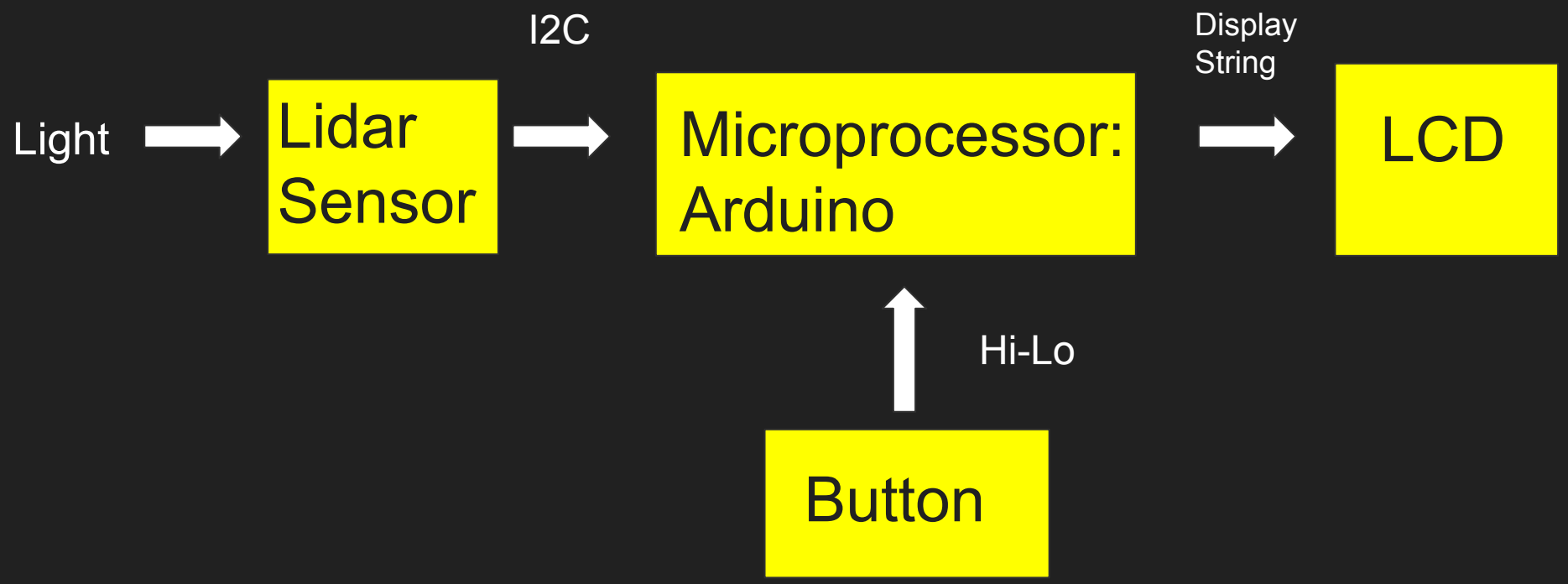

Schematic and Photos

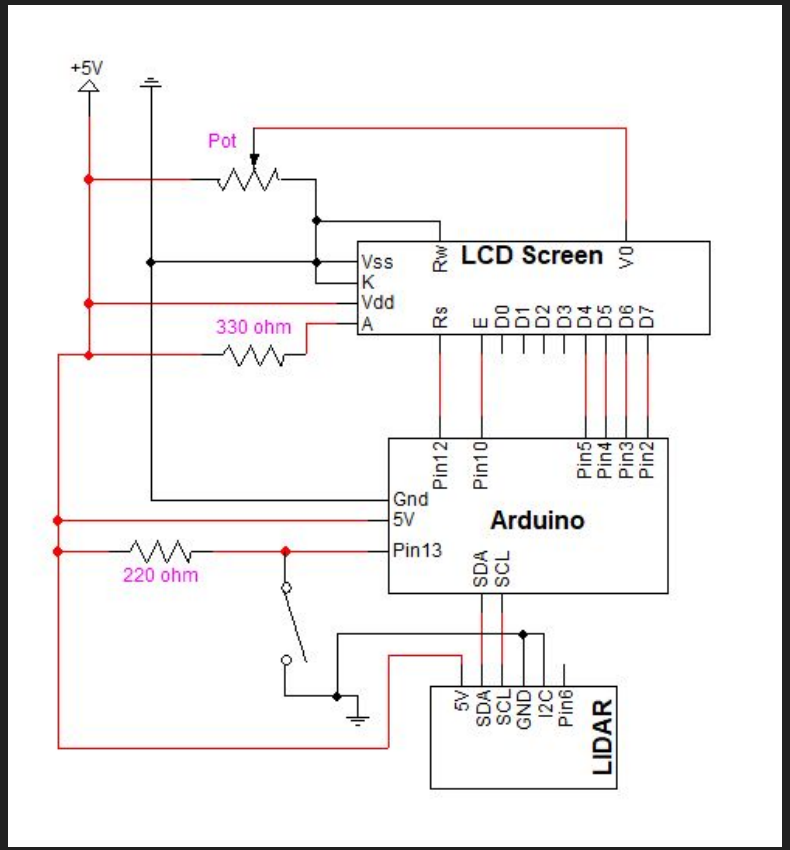

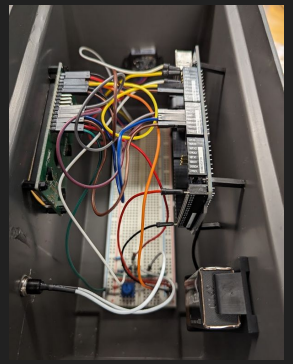

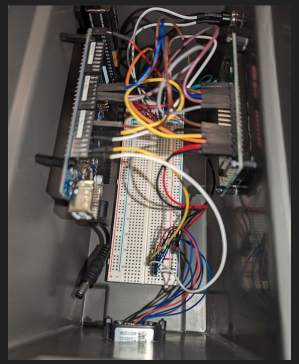

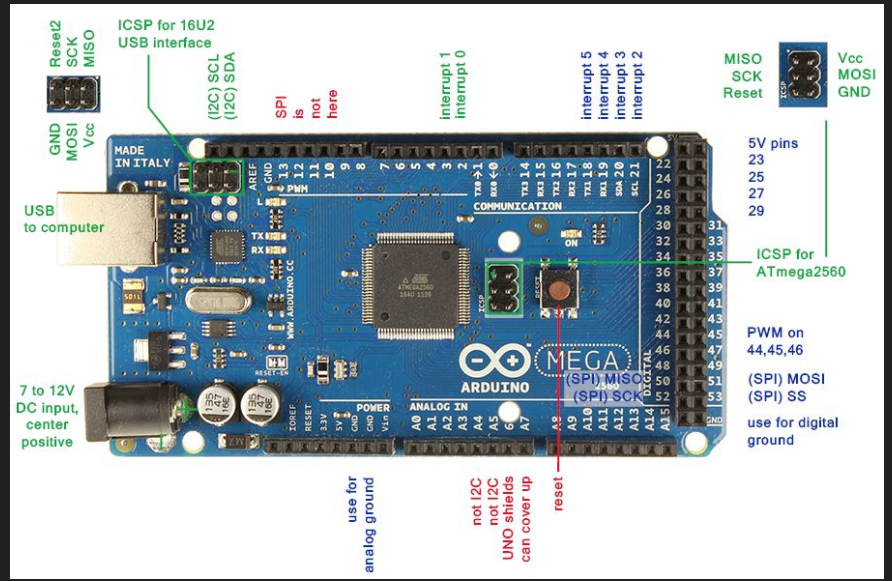

https://forum.arduino.cc/t/arduino-mega2560-r3-pinouts-photo/123330

Code

```cpp
 #include <Arduino.h>      // Every sketch needs this
#include <Wire.h>         // Instantiate the Wire library
#include <TFLI2C.h>       // TFLuna-I2C Library v.0.1.1
#include <LiquidCrystal.h> //Library for LCD
LiquidCrystal lcd(12, 10, 5, 4, 3, 2);  //pins used for the LCD screen



//#loop forever
//while True:
//  if GPIO.input(button) == True: # Checks if the pin is HIGH
//    print("HIGH")
//  time.sleep(0.01) # In order to not overburden the CPU

TFLI2C tflI2C; //class I2C
int tfDist;    // distance in centimeters
int tfAddr = TFL_DEF_ADR;  // Use this default I2C address or

const int Button= 13;  // sets the digital pin 13 as output

void setup()
{
    Serial.begin( 115200);  // Initalize serial port
    Wire.begin();           // Initalize Wire library
    lcd.begin(16, 2);   // putting in the diaentions of the LCD
    pinMode(Button, INPUT); // setup pin 13 as input to read the button

}
```

```cpp
void loop()  // Forever loop
{
    delay(100); // delay for our eyes to be able to see the LCD properly
    if (digitalRead(Button) == LOW){ // if the digital pin voltage reading is at ZERO
                                     // Ground, The LIDAR reading will continue
      if( tflI2C.getData( tfDist, tfAddr)) // If read okay...
      {
          lcd.clear();                // clear LCD screen
          lcd.setCursor(2,0);         // sets cursor to row 0 column 2
          lcd.print("Dist: ");        // print "Dist: " on LCD
          lcd.print(tfDist);           // print the data...
          lcd.print("cm ");           // print "cm " on LCD
      }
    }
      else{
      tflI2C.printStatus(); // Debugging to serial monitor: Ready or Print Error
      delay(100);           //delay for our eyes to be able to see the serial monitor properly
  }
}
```

Using Arduino IDE to implement C++ code

Learning Experience

UART and I2C

UART

- UART Communication should be possible with ATmega 2560, since it has 4 pairs of ports
    - Code describes default as Serial, then Serial1, Serial2, and Serial3
    - Serial monitor, Lidar sensor, LCD Screen
- Many errors extracting data from LIDAR sensor
    - 9 byte array needed
- Appeared more straightforward initially
- Issues included:
    - Garbage characters output
    - No read data from LIDAR
    - No data output to LCD Screen

Byte	0	1	2	3	4	5	6	7	8
Description	0x59	0x59	Dist_L	Dist_H	Amp_L	Amp_H	Temp_L	Temp_H	Check_sum

I2C

- Became easier to use since libraries were available to collect Data efficiently
- Documentation on its processing of data, sync the data sample with the LCD display.

Future Improvements

- Power Switch
- Laser to verify accuracy
- Levelling components
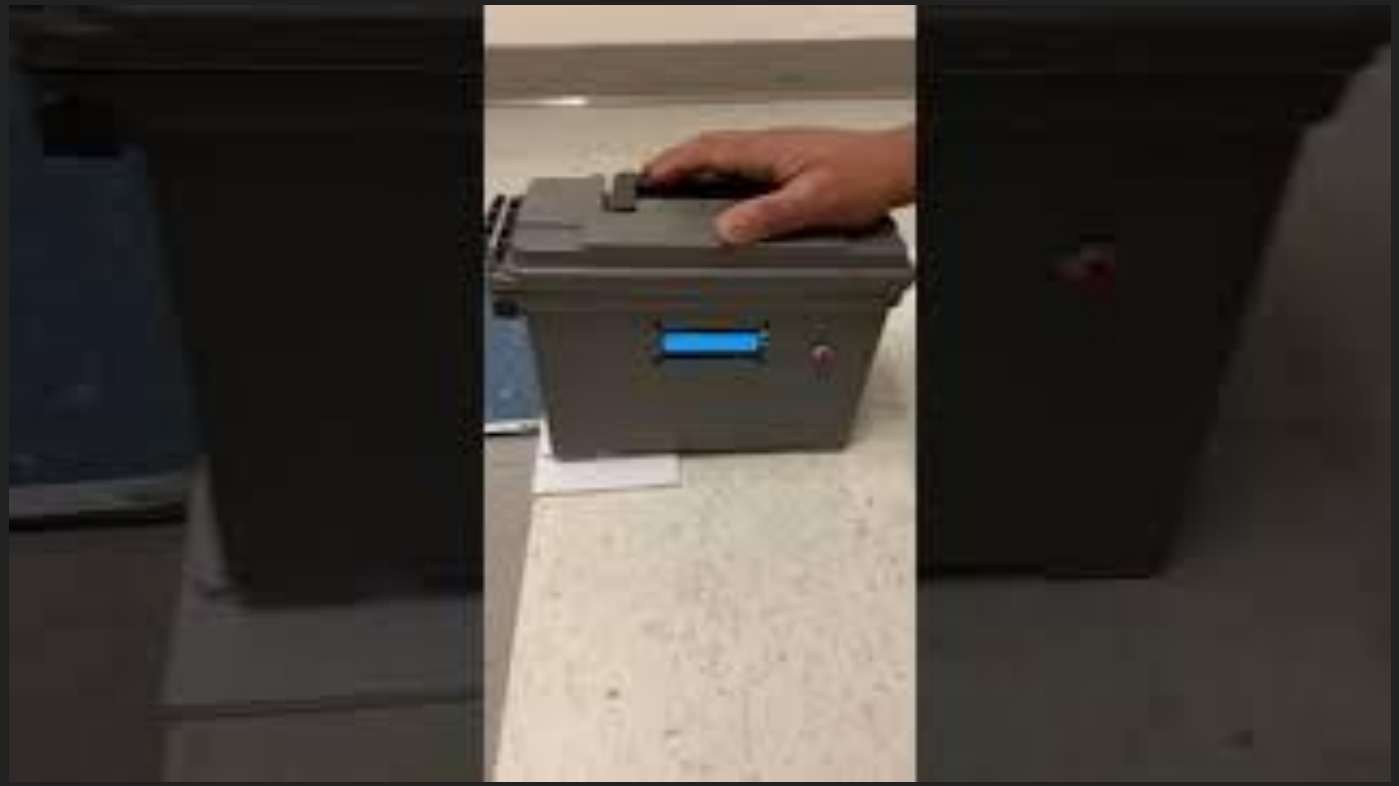
Demonstration