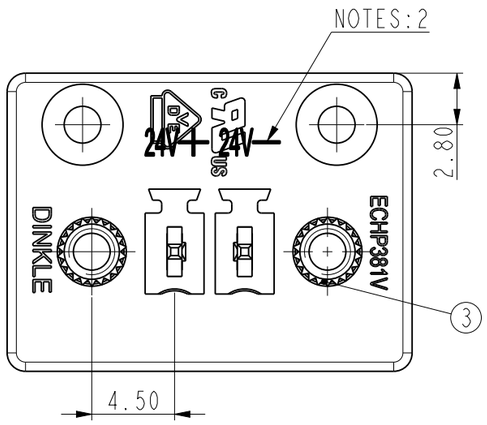

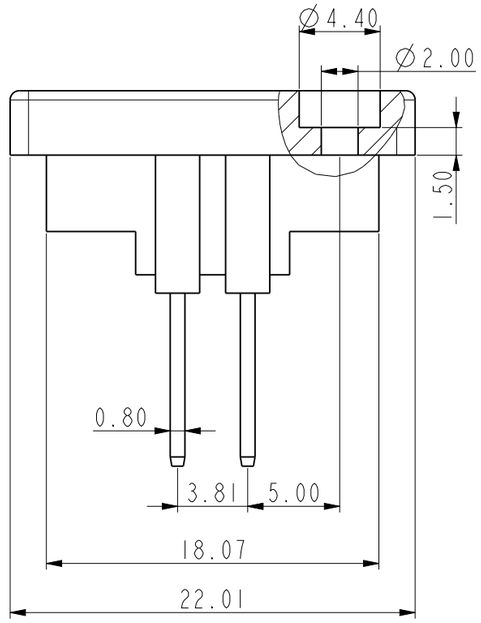

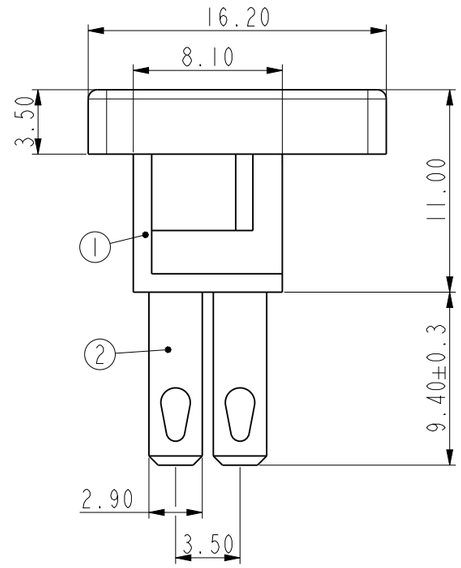

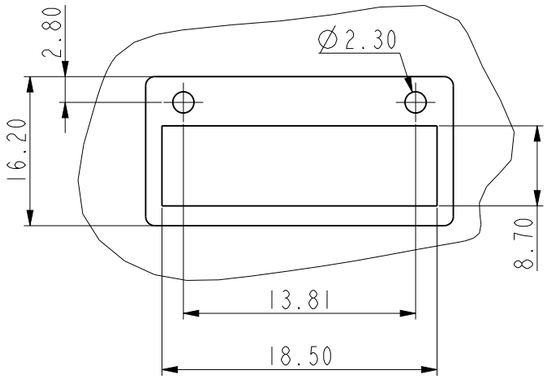

PCB LAYOUT

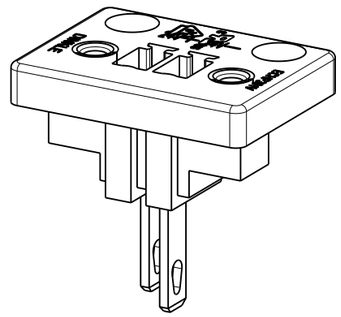

NOTES:
1.RoHS Compliance
2.Printing in black.The font is Arial at the height of 1.5mm

ITEM	NAME OF PART	MATERIAL	NOTES
3	NUT	COPPER ALLOY	M2.5
2	SOLDER PIN	COPPER ALLOY	Tin PLATED
1	HOUSING	PA66	UL94-V0 RED

DRW.	Shy.Zhao	DATE	2025-08-14	GENERAL TOLERANCE	
CHK.	Don.Yan	DATE	2025-08-14	SPECIFICATION FILE	SF-ECHP381V-001
APP.	Webb.Liu	DATE	2025-08-14	DRAWING TYPE	SP-03
PART NO.	ECHP381V-S2660002P				

Total Pitch Tolerances		Normal dimension Tolerances	
0~30	±0.20	0~30	±0.25
over 30~53	±0.25	over 30~53	±0.30
over 53~70	±0.30	over 53~70	±0.35
over 70~90	±0.35	over 70~90	±0.44
over 90~115	±0.44	over 90~115	±0.55
over 115~150	±0.55	over 115~150	±0.70
over 150~200	±0.70	over 150~200	±0.85
over 200~250	±0.85	over 200~250	±1.00
over 250~320	±1.00	over 250~320	±1.20

REV.	CONTENT	DRW.	DATE
V1	1		

DINKLE ENTERPRISE CO., LTD.

UNITS	mm	THIRD ANGLE PROJECTION	
SCALE	3:1	SHEET/OF	1/1

DINKLE has proprietary right to these drawings and specifications hereon, it shall not be reproduced or used as the basis for the manufacture of devices without permission. User should verify drawings are the most recent version.
Copyright © DINKLE Enterprise Co., Ltd. All Rights reserved.

ECHP381V

规格书编号/Specification File No.:SF-ECHP381V-001 版本/Version：A3

一般資訊 / *General Information*

产品长叙述/Long description	PCB Connector,Pitch :3.81mm , 300V , 8A
产品类型/Product type	PCB Connector – Socket
间距/ Pitch (mm)	3.81
产品颜色/ Color	Refer to drawing
固定方式/ Type of locking	With threaded flange
产品长度/ Length (mm)	3.81*(P-1)+18.2
产品宽度/ Width (mm)	16.2
产品高度/ Height (mm)	20.4
连接方式/Connection method	Solder/Slip-on connection
滑插式连接尺寸/Dimensions of slip-on connection (mm)	0.8x2.9
电位数/Circuit diagram	2~24
产品点数 / Number of poles	02P~24P
产品层数/Level	1
连接点数/Connection points	2~24

材料信息/ *Material Information*

绝缘材料/ Insulating material	PA66
绝缘材料组别 / Insulating material group	I
阻燃等级,符合 UL94 / UL94 Flammability rating	V0
绝缘阻抗/ Insulation resistance	≥500MΩ at DC 500V
导体材料/ Conductor material	COPPER ALLOY
导体表面镀层/Plating of conductor surface	Tin PLATED

IEC数据 / *IEC Data*

额定电压 / Rated Voltage (V)	320
额定电流 / Rated Current (A)	14
额定电压 (II/2) / Rated Voltage (II/2)(V)	320
额定电压 (III/2) / Rated Voltage (III/2)(V)	160
额定电压 (III/3) / Rated Voltage (III/3)(V)	160
额定冲击电压(II/2) / Rated Impulse Voltage (II/2)(kV)	2.5
额定冲击电压(III/2) / Rated Impulse Voltage (III/2)(kV)	2.5

E-mail: service@dinkle.com
© DINKLE ENTERPRISE CO., LTD. ALL RIGHT RESERVED

额定冲击电压(III/3) / Rated Impulse Voltage (III/3)(kV)	2.5
最小硬质导线横截面积/Conductor cross section solid. min(mm²)	0.2
最大硬质导线横截面积/Conductor cross section solid. max(mm²)	1.5
最小柔性导线横截面积/Conductor cross section stranded. min(mm²)	0.2
最大柔性导线横截面积/Conductor cross section stranded. max(mm²)	1.5

UL数据 / *UL Data*

额定电压 (UL/CUL 标准 B 组)/Rated Voltage (UL/CUL Group B)(V)	300
额定电流 (UL/CUL 标准 B 组)/Rated Current (UL/CUL Group B) (A)	8
额定电压 (UL/CUL 标准 D 组)/ Rated Voltage (UL/CUL Group D)(V)	300
额定电流 (UL/CUL 标准 D 组)/Rated Current (UL/CUL Group D) (A)	8
最小導線, 符合 UL/CUL / Min. wire connection acc. to UL/CUL(AWG)	28
最大導線, 符合 UL/CUL /Max. wire connection acc. to UL/CUL(AWG)	16
最小硬质導線, 符合 UL/CUL/ Min. solid wire connection acc. to UL/CUL(AWG)	28
最大硬质導線, 符合 UL/CUL/ Max. solid wire connection acc. to UL/CUL(AWG)	16

通用参数/ *General Data*

法兰最大扭矩/Tightening flange torque max(N.m)	0.3

环境与安全/ *Environmental and safety*

手指接触防护 IP20(IEC 60529)/Finger protection IP20(IEC60529)	YES
最高工作温度/Operating temperature max (°C)	120
最低工作温度/Operating temperature min (°C)	-40

配件/*Accessories*

配件信息:	
KEY CODE	ECHK1

产品认证/许可/ *Approvals*

© DINKLE ENTERPRISE CO., LTD. ALL RIGHT RESERVED

UL Recognized

额定电压 B 组/Rated Voltage (Group B) (V)	300
额定电流 B 组/Rated Current (Group B) (A)	8
额定电压 D 组/Rated Voltage(Group D) (V)	300
额定电流 D 组/Rated Current(Group D) (A)	8

CUL Recognized

额定电压 B 组/Rated Voltage (Group B) (V)	300
额定电流 B 组/Rated Current (Group B) (A)	8
额定电压 D 组/Rated Voltage(Group D) (V)	300
额定电流 D 组/Rated Current(Group D) (A)	8

VDE Approval

额定电压/Rated Voltage(V)	320
额定电流/Rated Current (A)	14

© DINKLE ENTERPRISE CO., LTD. ALL RIGHT RESERVED