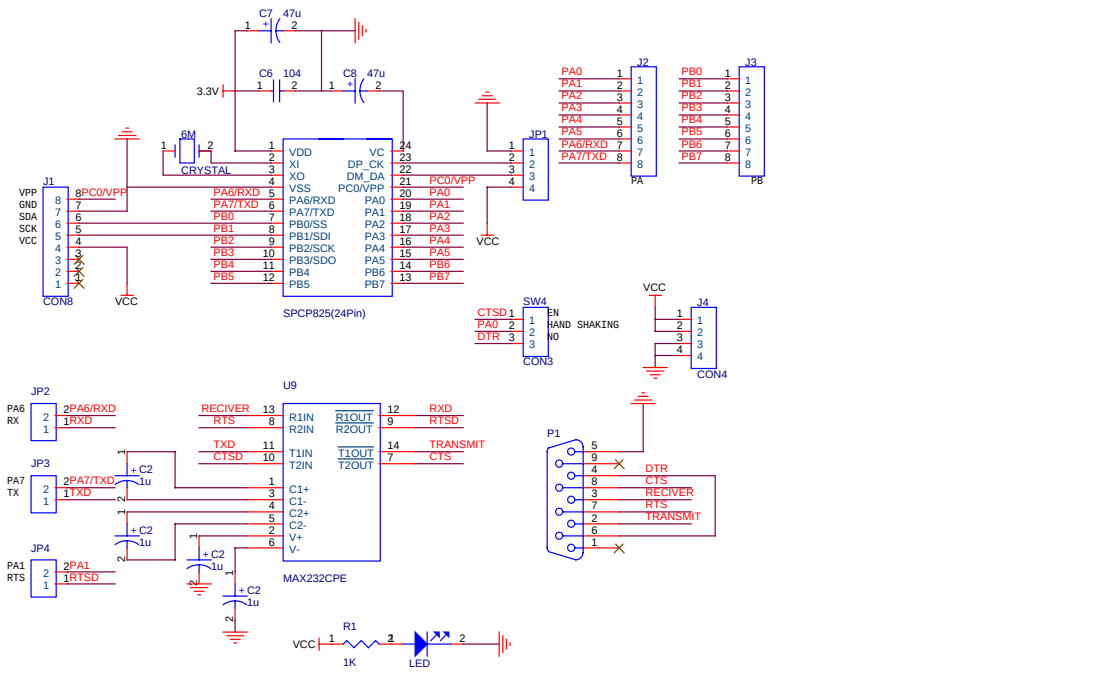


USB-UART 转换口模组 V1.0.0
SN-025

| | | |
|---|---|---|
| Title <Title> | | |
| Size A | Document Number <Doc> | Rev <RevCode> |
| Date: Thursday, September 08, 2005 | Sheet 1 of 1 | |