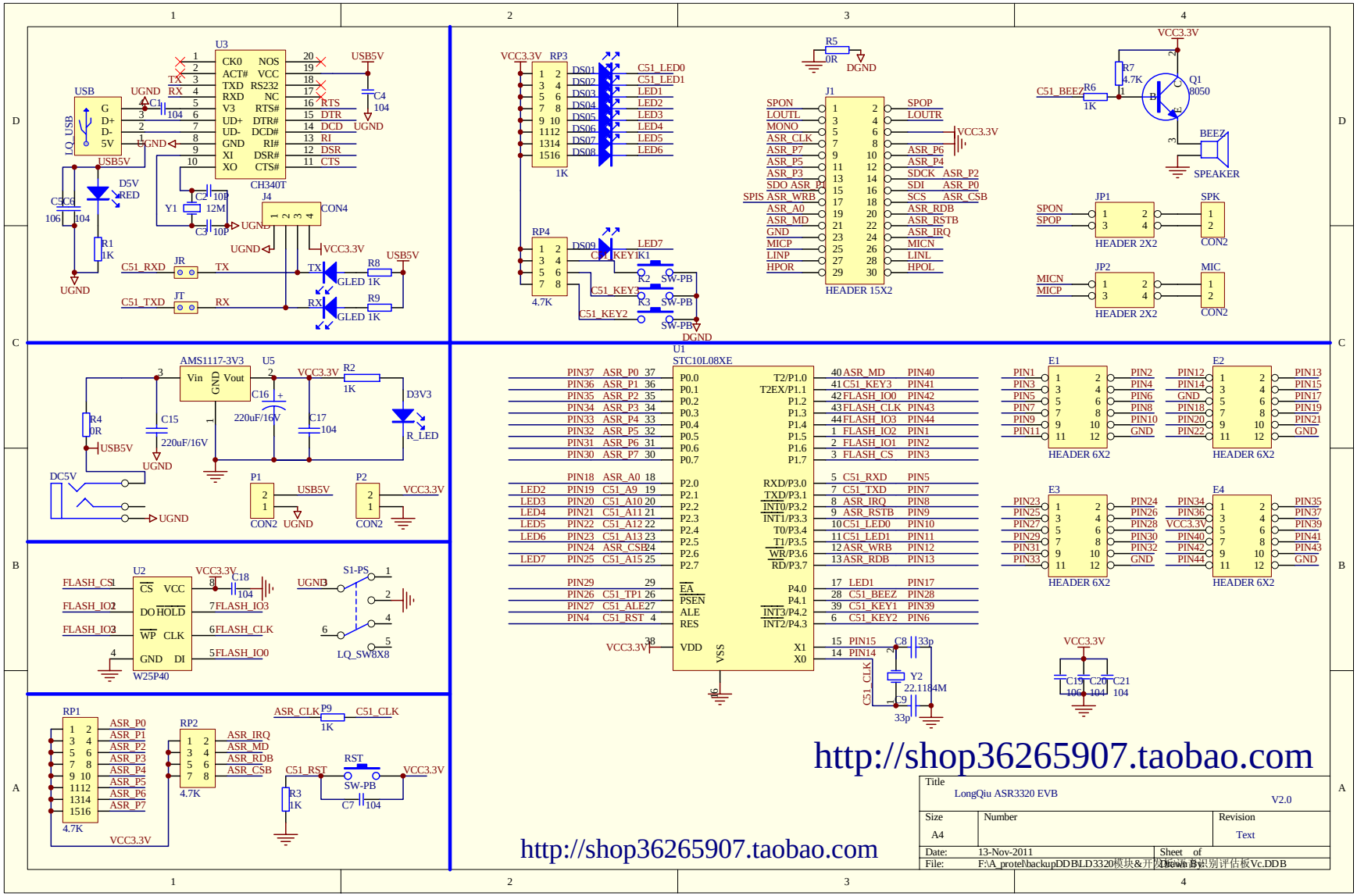

http://shop36265907.taobao.com

http://shop36265907.taobao.com

Title	LongQiu ASR3320 EVB	V2.0
Size A4	Number	Revision Text
Date: 13-Nov-2011		Sheet of
File: F:\A_protel\backupDDB\LD3320模块&开发板&识别评估板Vc.DDB		Drawn By: