THIS DOCUMENT AND THE DATA DISCLOSED HEREIN OR HEREWITH IS THE PROPERTY OF ALTIUM LIMITED AND MAY BE FREELY DISTRIBUTED IN WHOLE. NO RIGHTS ARE RESERVED OR EXPRESS OR IMPLIED WARANTEE GIVEN.

REVISION	DESCRIPTION	DATE	APPROVED

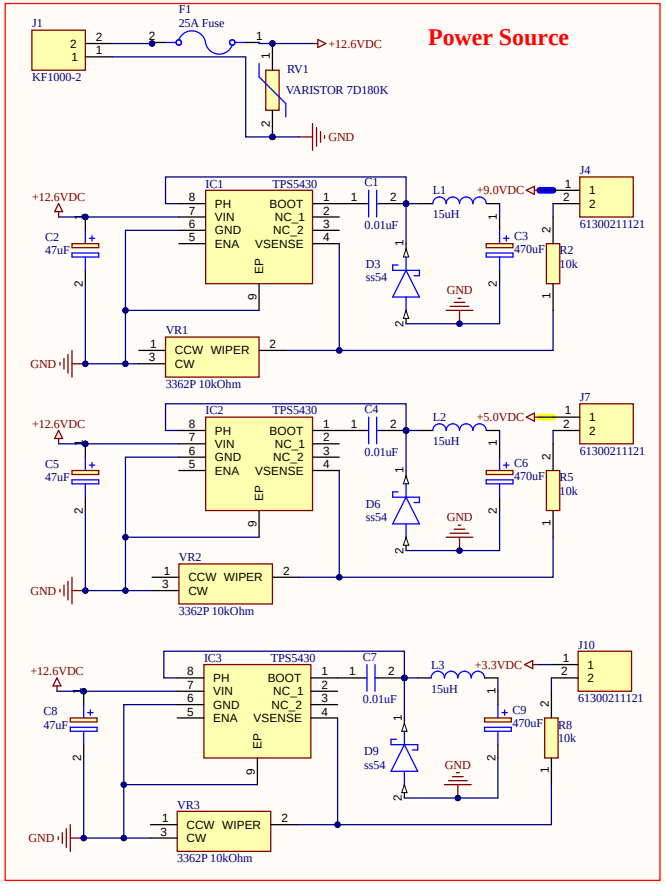

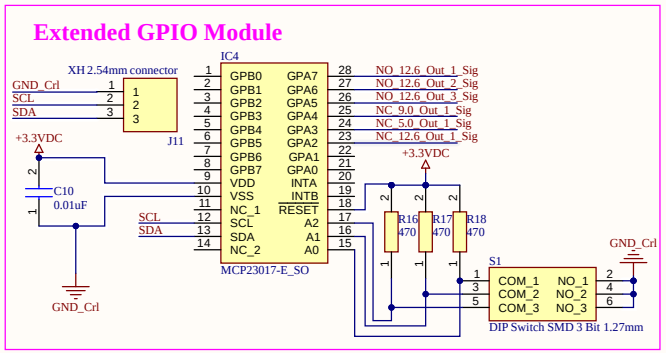

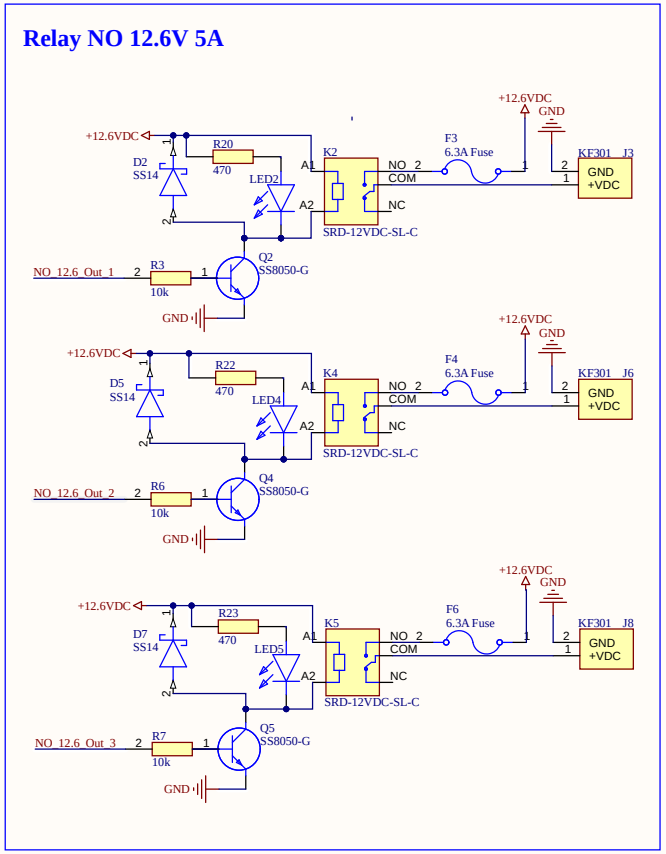

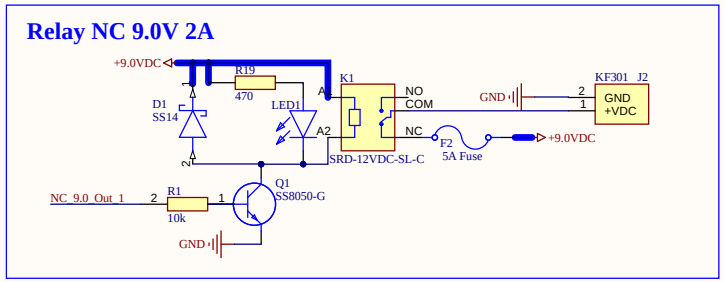

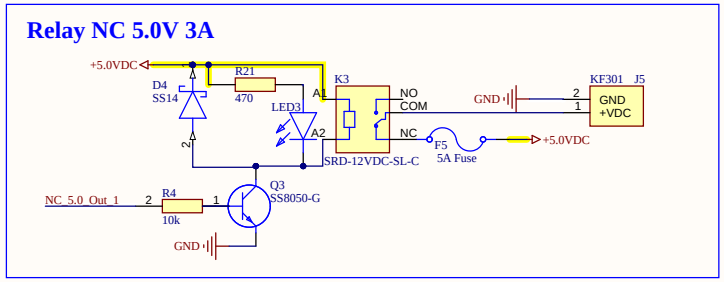

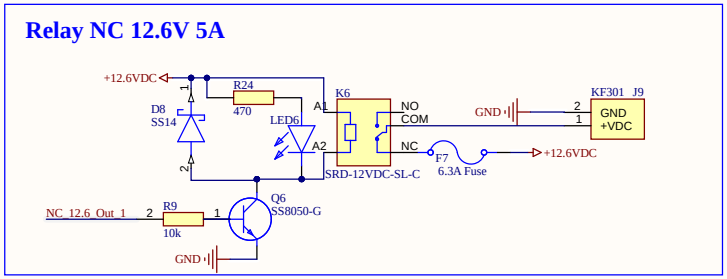

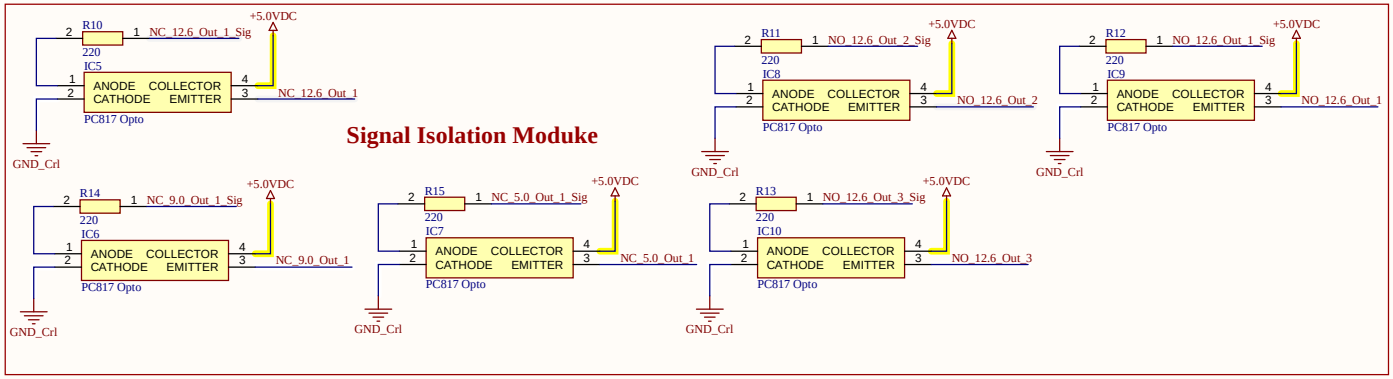

APPROVALS	DATE
ENG: *	
DSN: *	
CHK: *	
REFERENCE DOCUMENTS	
BOM:	
ASSY DWG:	
FAB DWG:	
PCB DWG:	

PROJECT: Altium

PROJECT REVISION: Not in version control | DOCUMENT REVISION: Not in version control | DESIGN ITEM:

TITLE: *

SIZE: A3 | CAGE CODE | DWG NO. | REV

SCALE: | FILE NAME: Mach_dieu_khien_nguon.SchDoc | SHEET 1 OF 3

THIS DOCUMENT AND THE DATA DISCLOSED HEREIN OR HEREWITH IS THE PROPERTY OF ALTIUM LIMITED AND MAY BE FREELY DISTRIBUTED IN WHOLE. NO RIGHTS ARE RESERVED OR EXPRESS OR IMPLIED WARANTEE GIVEN.

REVISION	DESCRIPTION	DATE	APPROVED

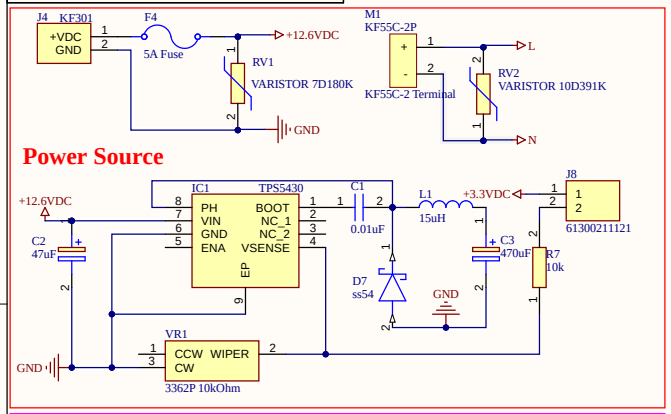

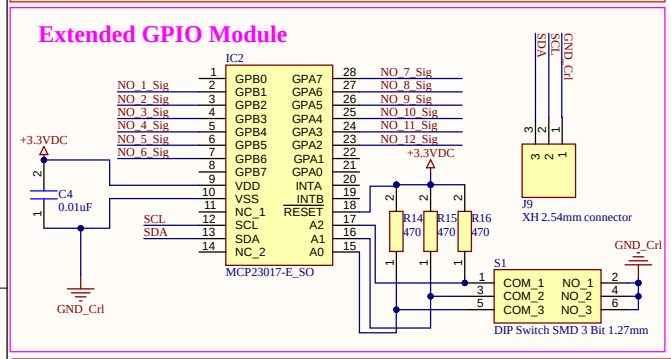

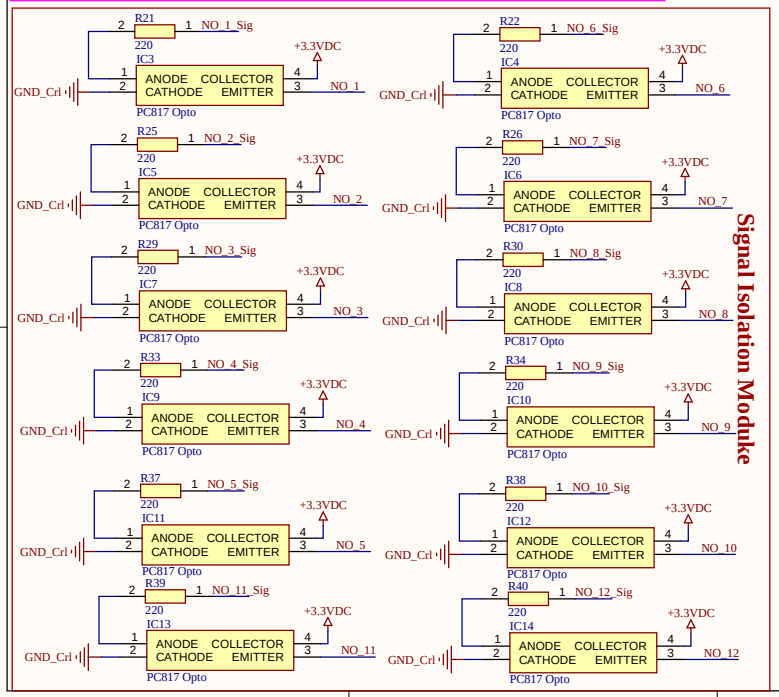

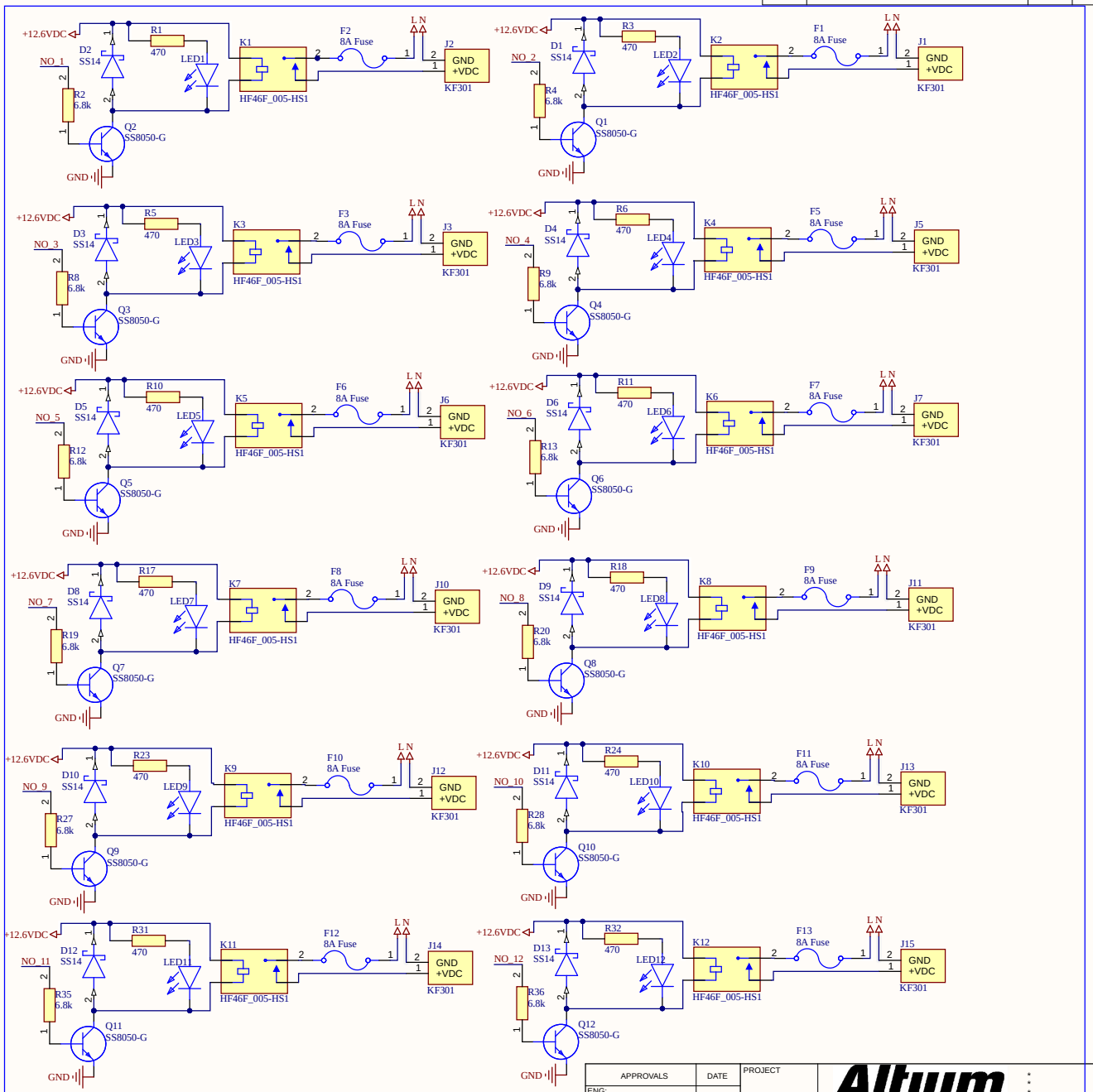

APPROVALS	DATE
ENG: *	
DSN: *	
CHK: *	
REFERENCE DOCUMENTS	
BOM:	
ASSY DWG:	
FAB DWG:	
PCB DWG:	

PROJECT

Altium

PROJECT REVISION: Not in version control | DOCUMENT REVISION: | DESIGN ITEM: Not in version control

TITLE *

SIZE A3 | CAGE CODE | DWG NO. | REV

SCALE: | FILE NAME Mach_dieu_khien_relay.SchDoc | SHEET 2 OF 3

THIS DOCUMENT AND THE DATA DISCLOSED HEREIN OR HEREWITH IS THE PROPERTY OF ALTIUM LIMITED AND MAY BE FREELY DISTRIBUTED IN WHOLE. NO RIGHTS ARE RESERVED OR EXPRESS OR IMPLIED WARANTEE GIVEN.

REVISION	DESCRIPTION	DATE	APPROVED

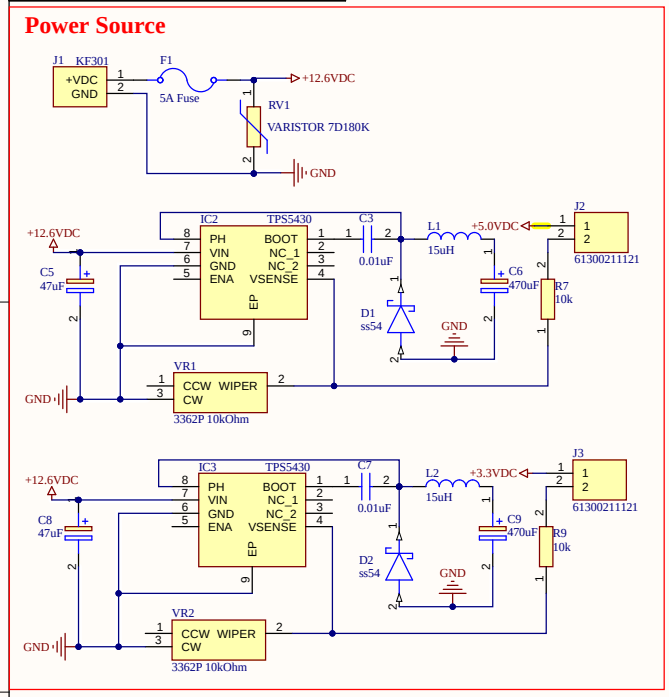

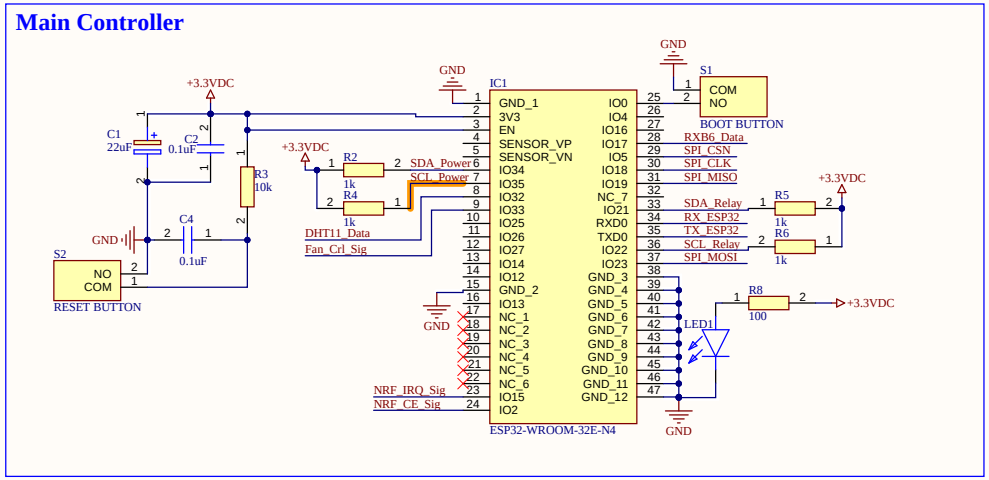

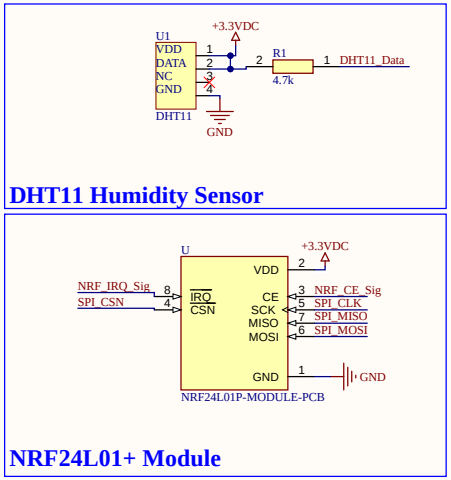

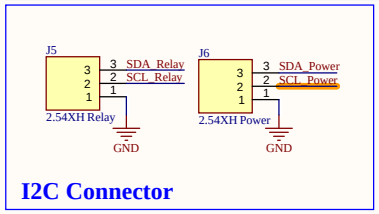

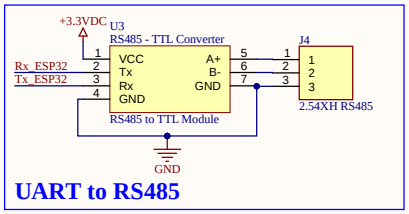

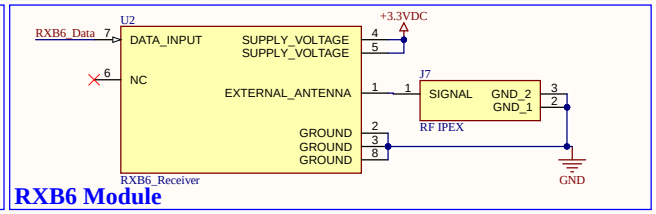

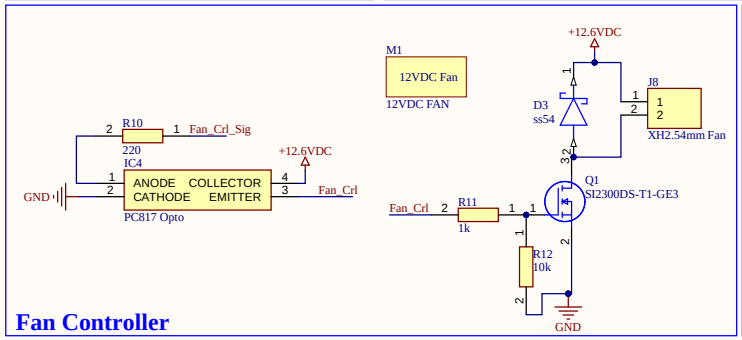

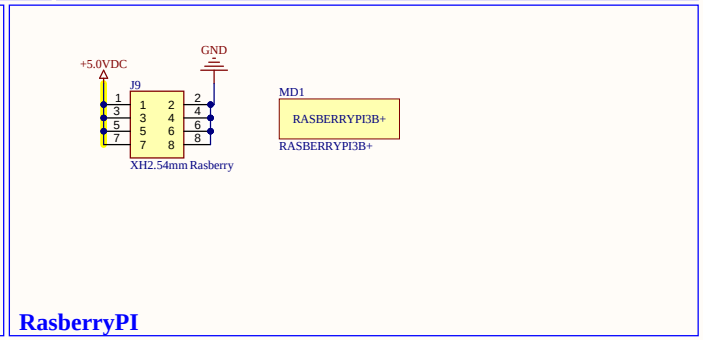

APPROVALS	DATE
ENG: *	
DSN: *	
CHK: *	
REFERENCE DOCUMENTS	
BOM:	
ASSY DWG:	
FAB DWG:	
PCB DWG:	

PROJECT: Altium

PROJECT REVISION: Not in version control | DOCUMENT REVISION: Not in version control | DESIGN ITEM:

TITLE: *

SIZE: A3 | CAGE CODE | DWG NO. | REV

SCALE: | FILE NAME: Mach_dieu_khien_trung_tam.SchDoc | SHEET 3 OF 3

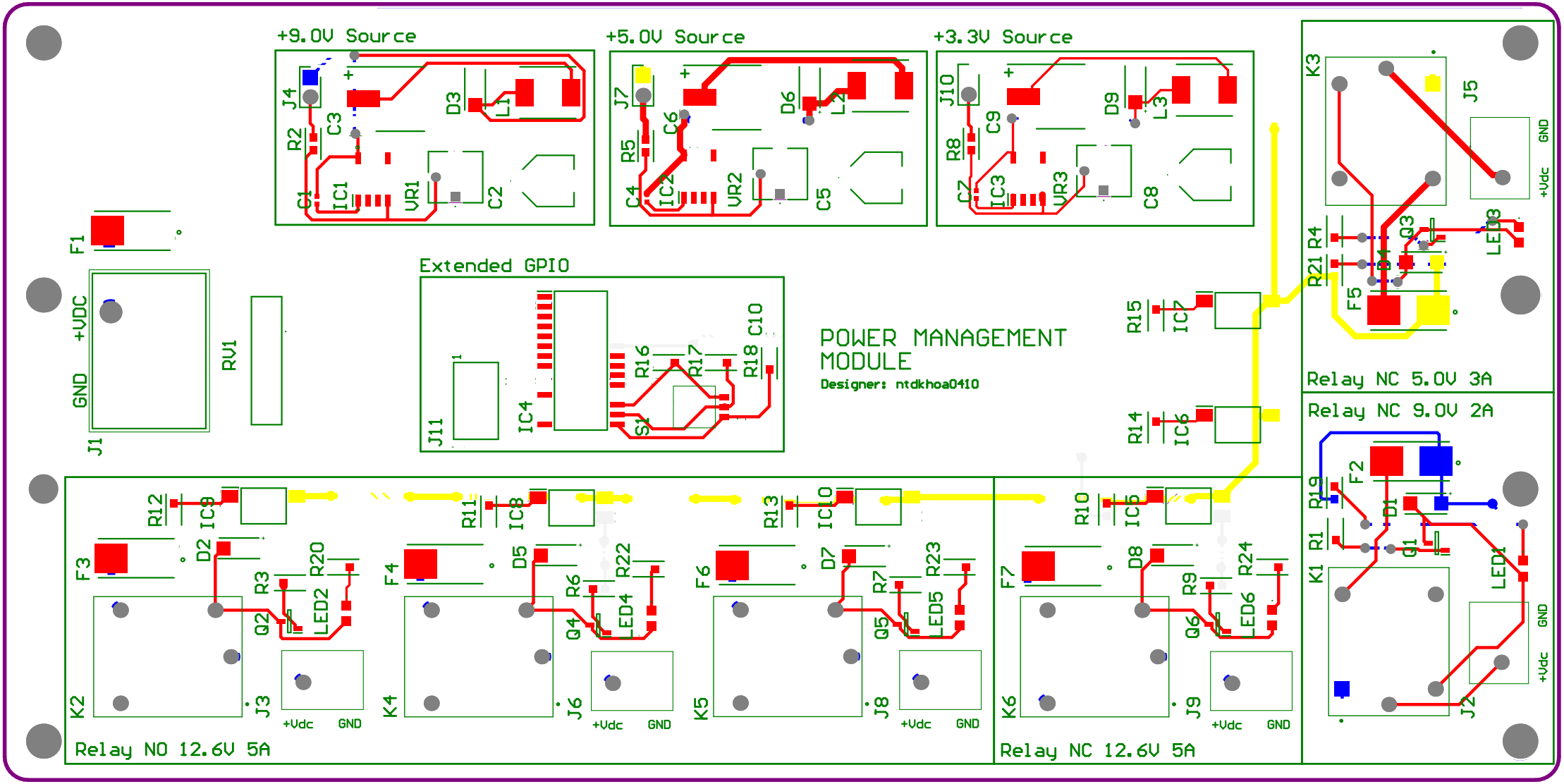
+9.0V Source
J4
R2
C3
D3
L1
C1
IC1
VR1
C2
+5.0V Source
J7
R5
C6
D6
L2
C4
IC2
VR2
C5
+3.3V Source
J10
R8
C9
D9
L3
C7
IC3
VR3
C8
F1
+VDC
GND
J1
RV1
Extended GPIO
J11
IC4
R16
R17
R18
C10
S1
POWER MANAGEMENT
MODULE
Designer: ntdkhoa0410
R15
IC7
R14
IC6
K3
J5
R21
R4
F5
Q3
D4
LED3
GND
+Vdc
Relay NC 5.0V 3A
Relay NC 9.0V 2A
F2
R19
D1
R1
Q1
K1
LED1
J2
GND
+Vdc
R12
IC9
D2
F3
R3
R20
Q2
LED2
K2
J3
+Vdc
GND
R11
IC8
D5
F4
R6
R22
Q4
LED4
K4
J6
+Vdc
GND
R13
IC10
D7
F6
R7
R23
Q5
LED5
K5
J8
+Vdc
GND
Relay NO 12.6V 5A
R10
IC5
D8
F7
R9
R24
Q6
LED6
K6
J9
+Vdc
GND
Relay NC 12.6V 5A

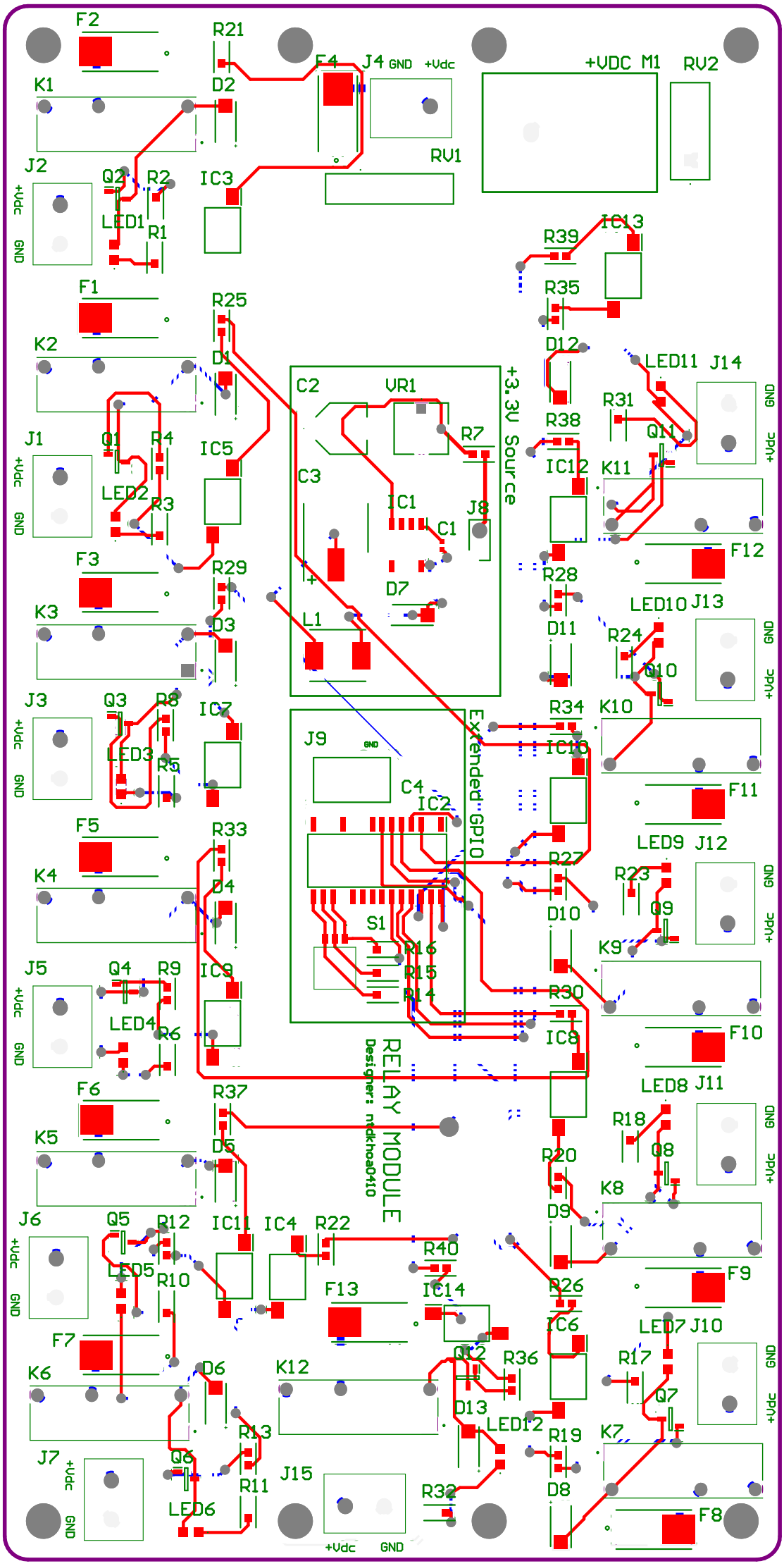
RELAY MODULE
Designer: ntdkhoa0410
+3.3V Source
Extended GPIO
+VDC M1
RV1
RV2
J4 GND +Vdc
J1
J2
J3
J5
J6
J7
J8
J9
J10
J11
J12
J13
J14
J15
K1
K2
K3
K4
K5
K6
K7
K8
K9
K10
K11
K12
F1
F2
F3
F4
F5
F6
F7
F8
F9
F10
F11
F12
F13
IC1
IC2
IC3
IC4
IC5
IC6
IC7
IC8
IC9
IC10
IC11
IC12
IC13
IC14
VR1
S1
C1
C2
C3
C4
L1
D1
D2
D3
D4
D5
D6
D7
D8
D9
D10
D11
D12
D13
Q1
Q2
Q3
Q4
Q5
Q6
Q7
Q8
Q9
Q10
Q11
Q12
R1
R2
R3
R4
R5
R6
R7
R8
R9
R10
R11
R12
R13
R14
R15
R16
R17
R18
R19
R20
R21
R22
R23
R24
R25
R26
R27
R28
R29
R30
R31
R32
R33
R34
R35
R36
R37
R38
R39
R40
LED1
LED2
LED3
LED4
LED5
LED6
LED7
LED8
LED9
LED10
LED11
LED12
+Vdc
GND

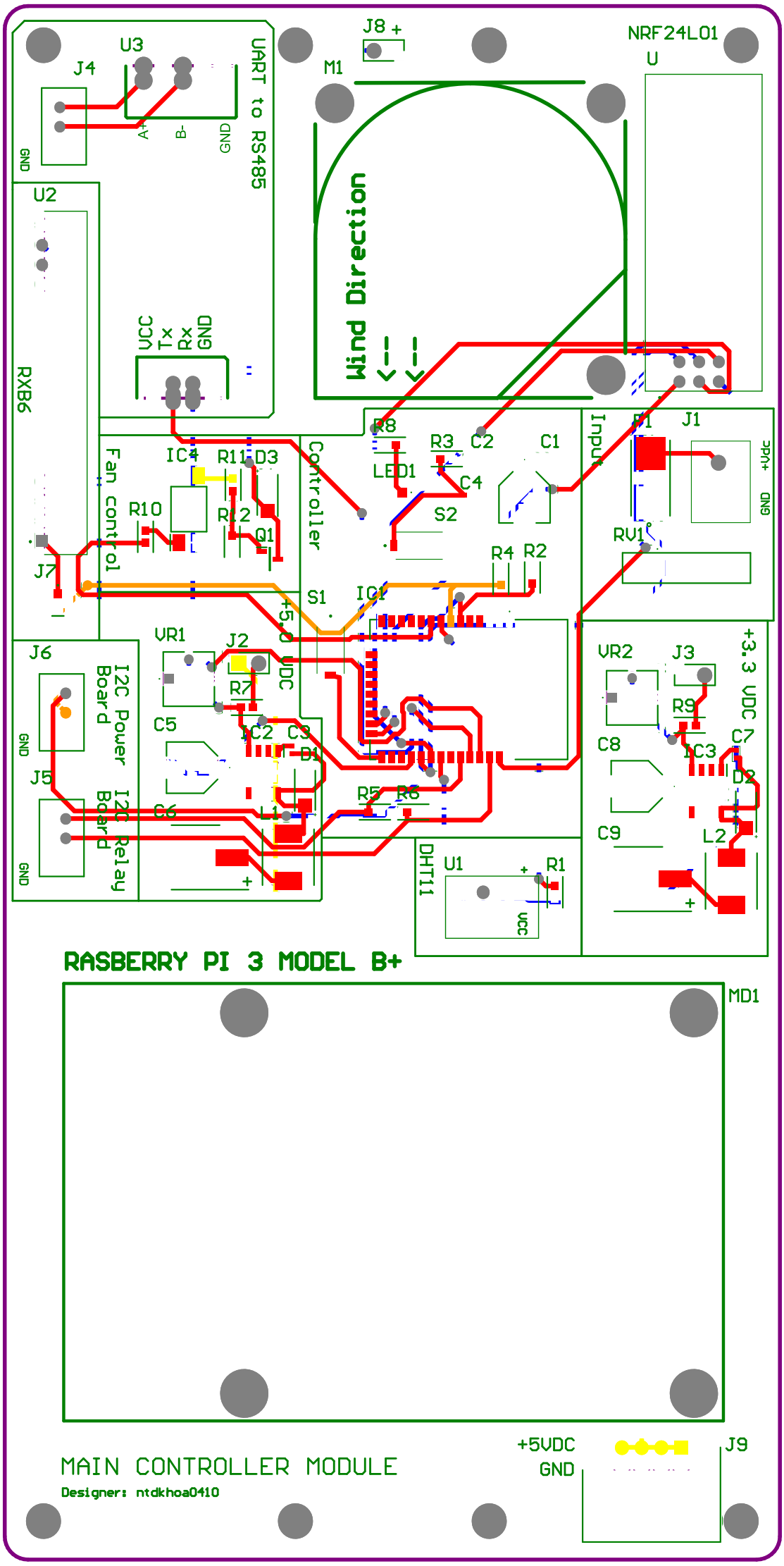
J8 +
NRF24L01
U
M1
U3
J4
UART to RS485
A+
B-
GND
GND
U2
Wind Direction
VCC
Tx
Rx
GND
RXB6
R8
R3
C2
C1
Input
R1
J1
+Vdc
GND
IC4
R11
D3
Controller
LED1
C4
Fan control
R10
R12
Q1
S2
RV1
R4
R2
J7
S1
IC1
+5.0 VDC
VR1
J2
VR2
J3
+3.3 VDC
J6
I2C Power Board
R7
R9
C5
IC2
C3
D1
C8
IC3
C7
GND
J5
I2C Relay Board
C6
L1
R5
R6
D2
C9
L2
DHT11
U1
R1
VCC
RASBERRY PI 3 MODEL B+
MD1
MAIN CONTROLLER MODULE
Designer: ntdkhoa0410
+5VDC
GND
J9