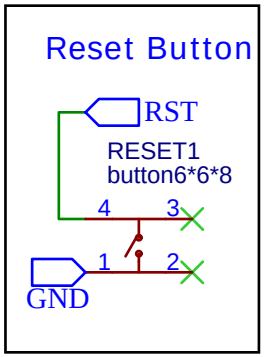

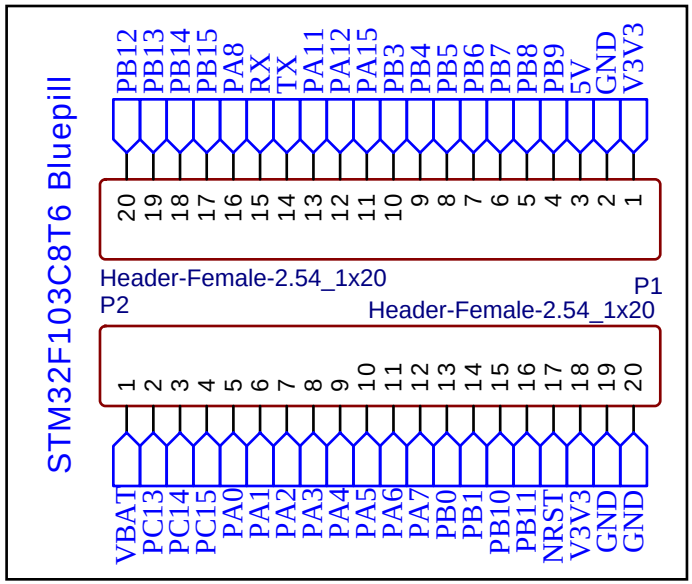

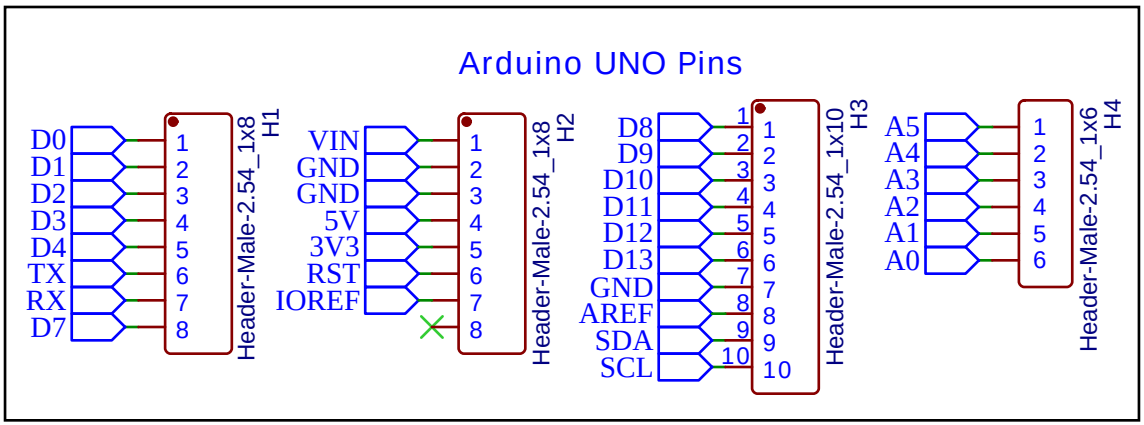

TITLE: Arduino N2CMU Shield		REV: 1.0
	Company:	Sheet: 1/1
	Date: 2024-04-18 Drawn By: Nathanne Isip	