Introduction to Git

Database Systems
DataLab, CS, NTHU
Spring, 2026

Outline

- Version control system
- Git basics
- Git branch
- Remote repository

Outline

- Version control system
- Git basics
- Git branch
- Remote repository

Why Version Control ?

Version Control System

- Store the projects, keep your revision history
- Synchronization between modifications made by different developers

Outline

- Version control system
- Git basics
- Git branch
- Remote repository

Git

- Git is a version control system which is
  - Fast
  - Easy to use
  - Distributed
  - Able to handle large project
    (ex. Linux Kernel 27.8 million lines)
- A git repository is a mini database that tracks your files

Installation

- Please check this link
  - http://git-scm.com/book/en/Getting-Started-Installing-Git

Configuration

- Modify `~/.gitconfig`
- Or, type in following commands

```
git config --global user.name “your name”
git config --global user.email “your@email.com”
```

* For more information, please refer this link.

Creating a new Repository

- Two ways to create a repository
  - Initializing a Repository in an Existing Directory

    `git init`
  - Cloning an Existing Repository
    - We will talk about it later
- The repository information will be stored in the .git directory

Committing A Version

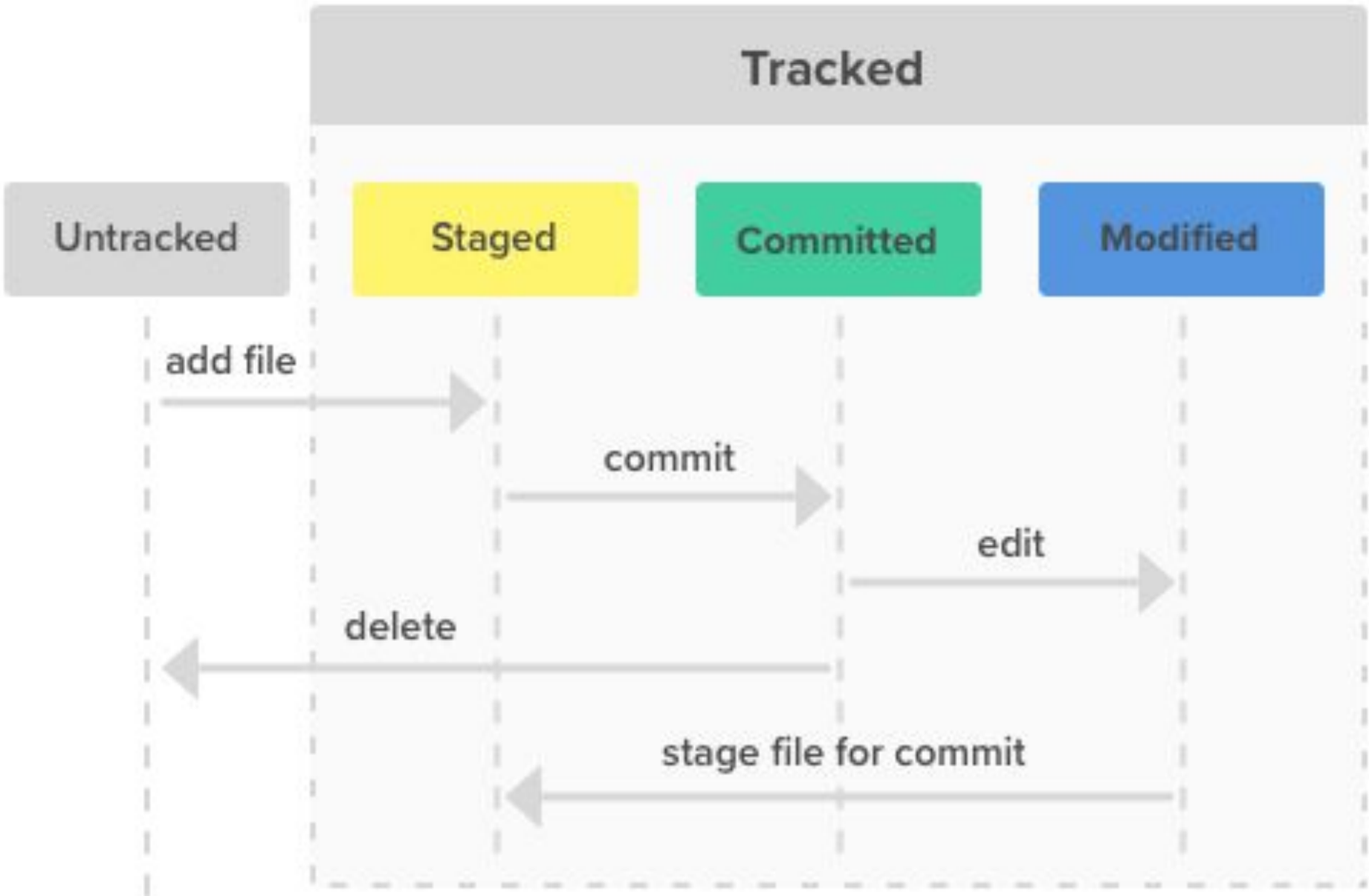

Committing A Version

- Staging (adding) a file

  `git add [file name]`

- Staging all files in the current directory

  `git add -A`

- Committing

  `git commit -m “[message]”`

Status

- Checking the current status and the current branch

```
git status
```

A History Tree

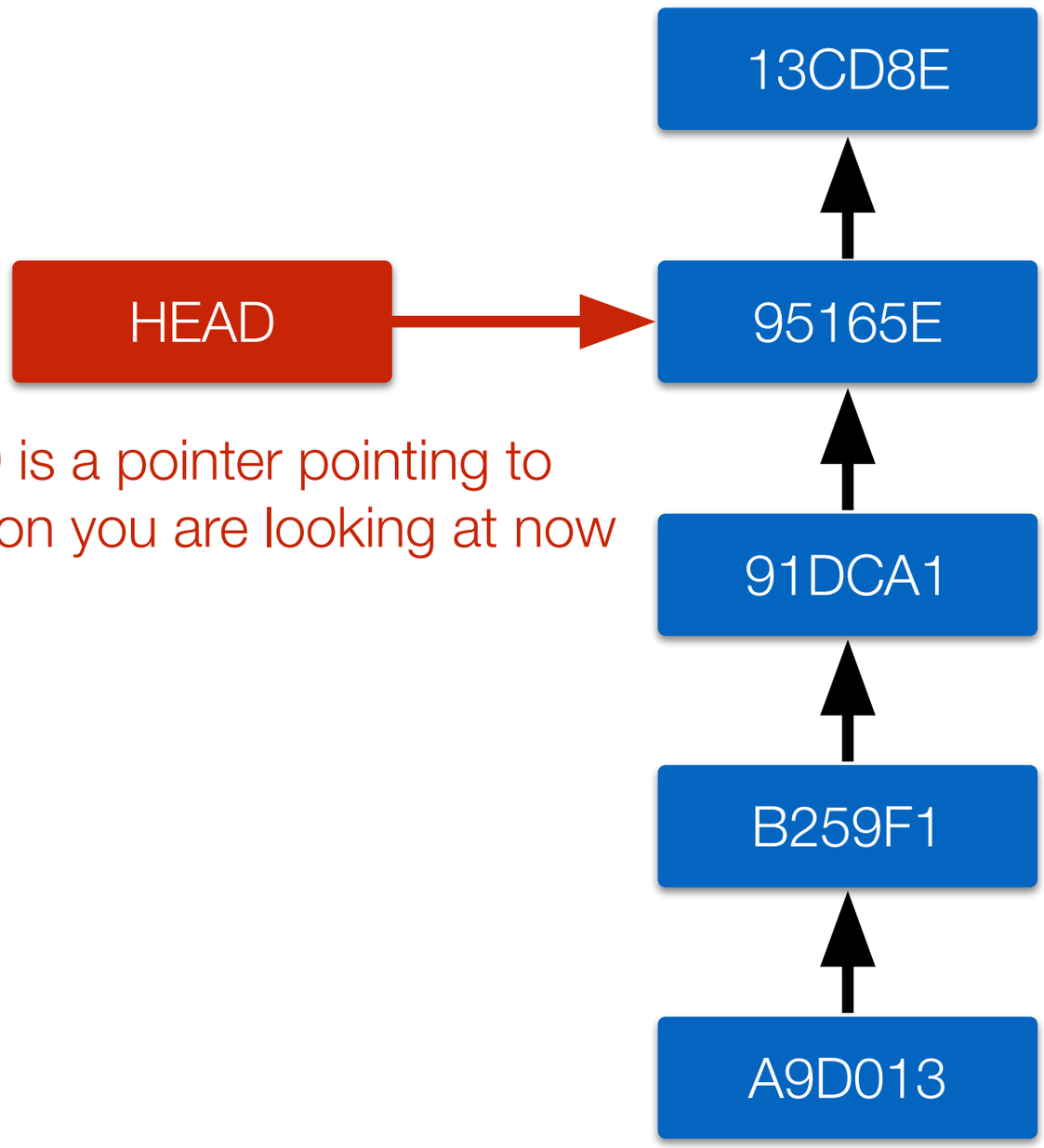

HEAD is a pointer pointing to the version you are looking at now

The versions you committed form a history tree

Logs

- Listing the log
  `git log`
- Listing each log in one line
  `git log --oneline`

```
user@DESKTOP-UUFO72K MINGW64 ~/Desktop/test/practice-submission (master)
$ git log
commit 25f75ca42a96a900a6f87994a6b4fd70583d5561 (HEAD -> master, origin/master, origin/HEAD)
Author: kkeevin123456 <kkeevin123456@gmail.com>
Date:   Sat Mar 6 11:02:23 2021 +0800

    add branch

commit d7533bf6016e3faf834e9e38f8dfd552960728d1 (origin/p123786579, origin/109065541, origin/109062608, origin/
, origin/107062301, origin/107062261, origin/107062233, origin/107062231, origin/107062230, origin/107062228, o
062123, origin/107062115, origin/107060023, origin/107060015, origin/107060008, origin/107060007, origin/107034
in/107000115, origin/107000105, origin/106072108, origin/106070034, origin/106070033, origin/106070007, origin/
, origin/106062133, origin/106062110, origin/106062109, origin/106033233, origin/106021225, origin/106012042, o
061701, origin/101000030, p123786579, 109065541, 109062608, 108065702, 108003809, 107062381, 107062325, 107062
82, 107062163, 107062140, 107062134, 107062123, 107062115, 107060023, 107060015, 107060008, 107060007, 107034
4, 106070033, 106070007, 106062315, 106062306, 106062214, 106062205, 106062142, 106062137, 106062133, 106062110
, 104061701, 101000030)
Author: chanchishen <csch@datalab.cs.nthu.edu.tw>
```

Checking Out A Version

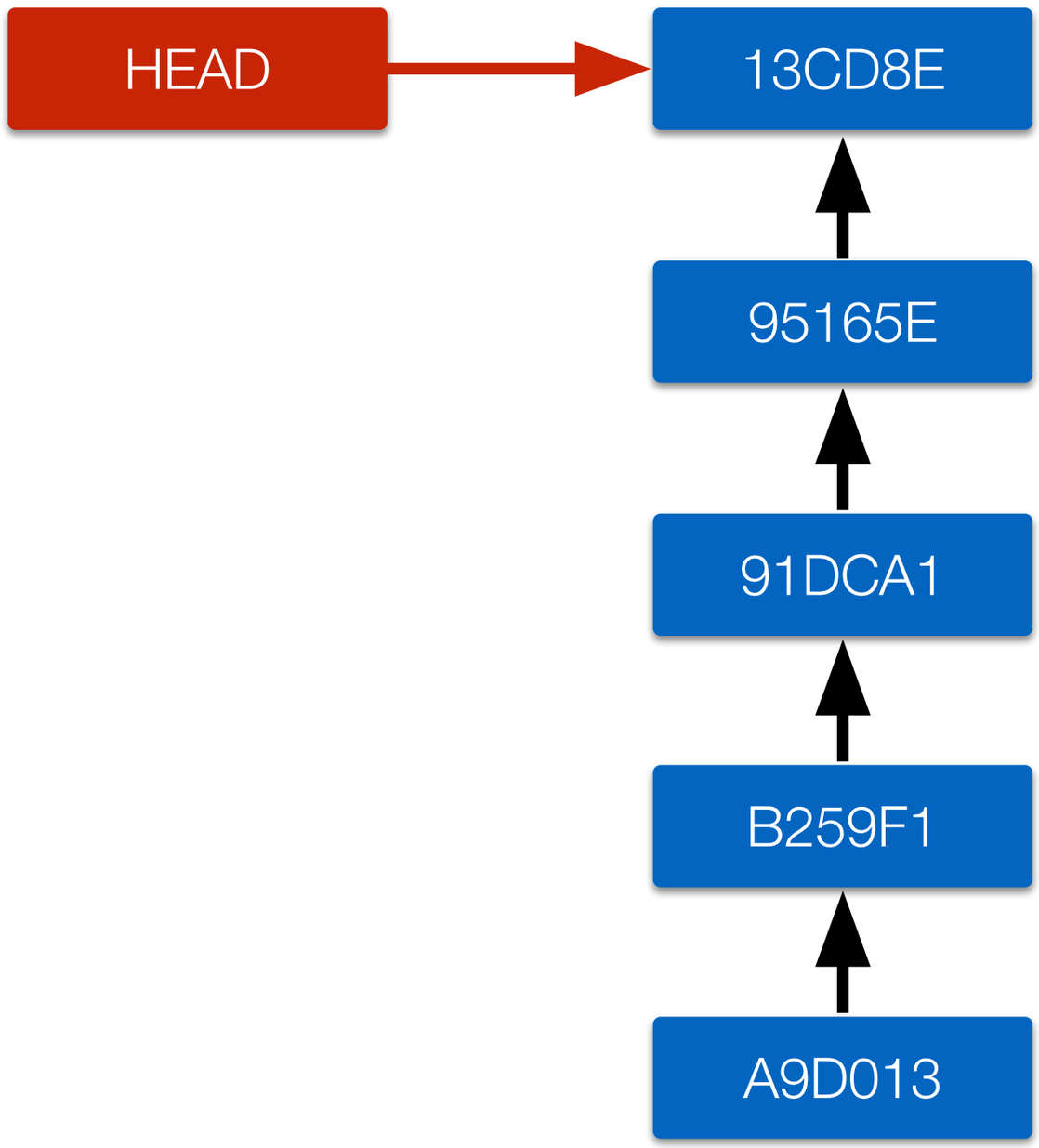


```
git checkout 91DCA1
```

Outline

- Version control system
- Git basics
- Git branch
- Remote repository

Branches

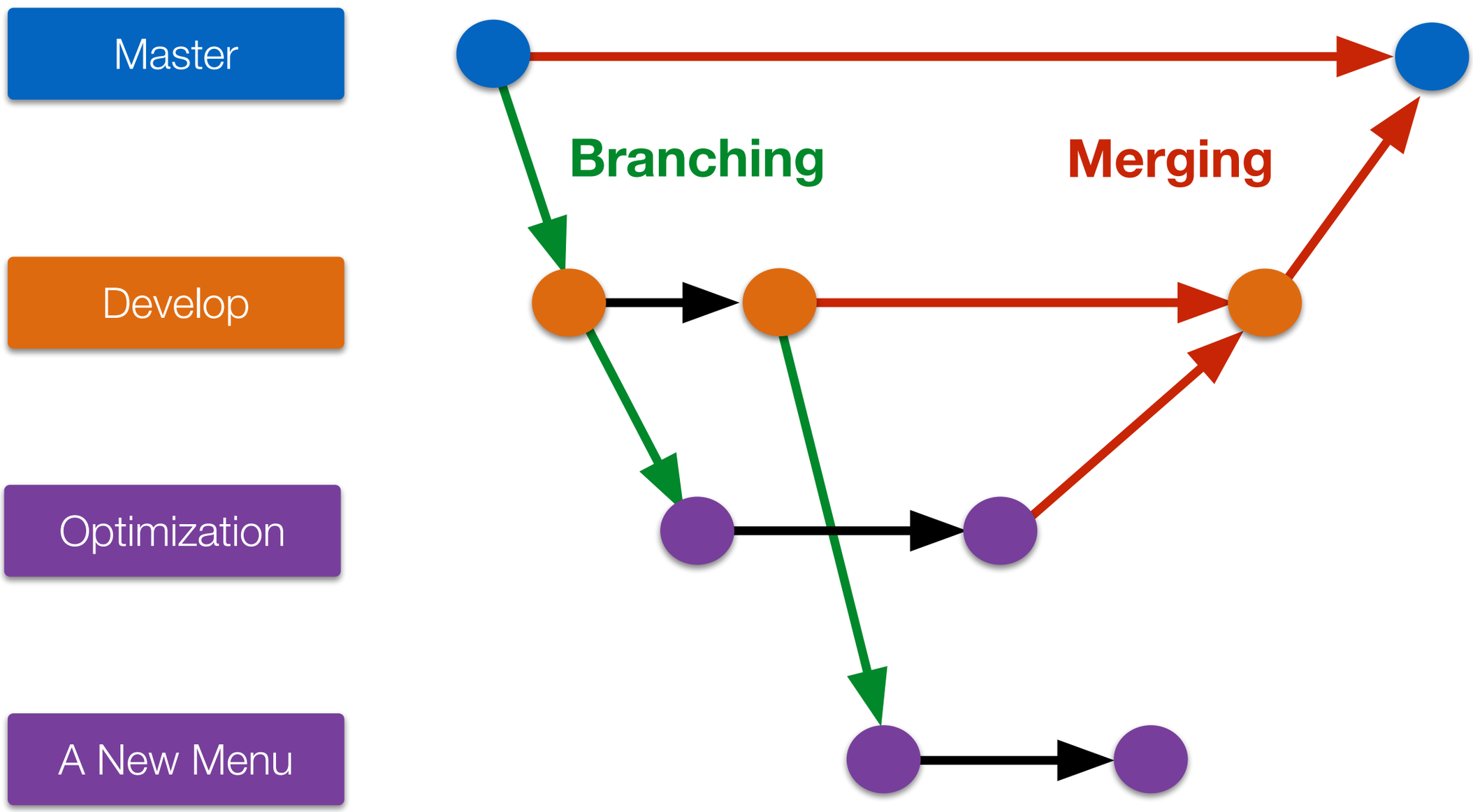

The Master Branch

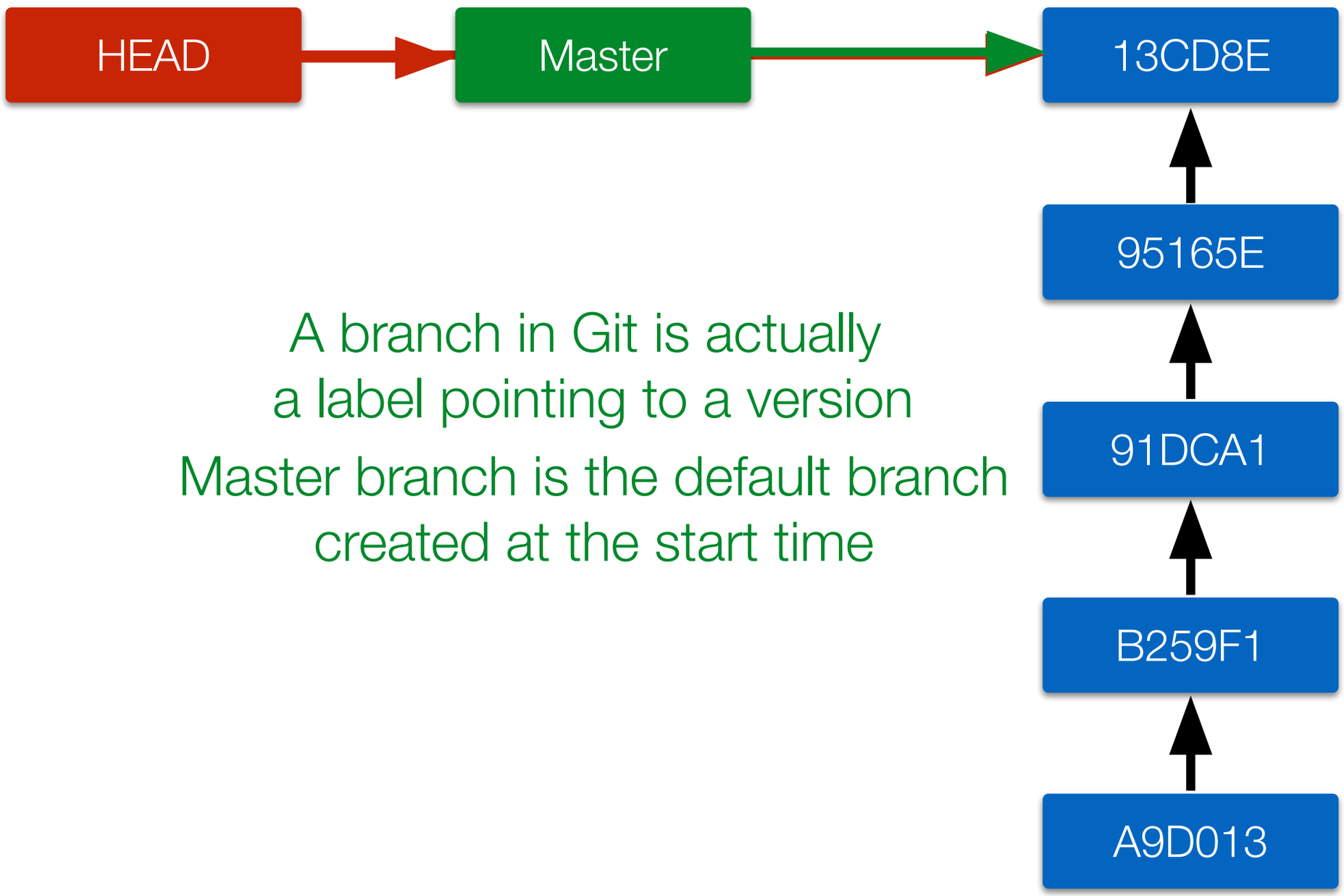

A branch in Git is actually
a label pointing to a version

Master branch is the default branch
created at the start time

Branching

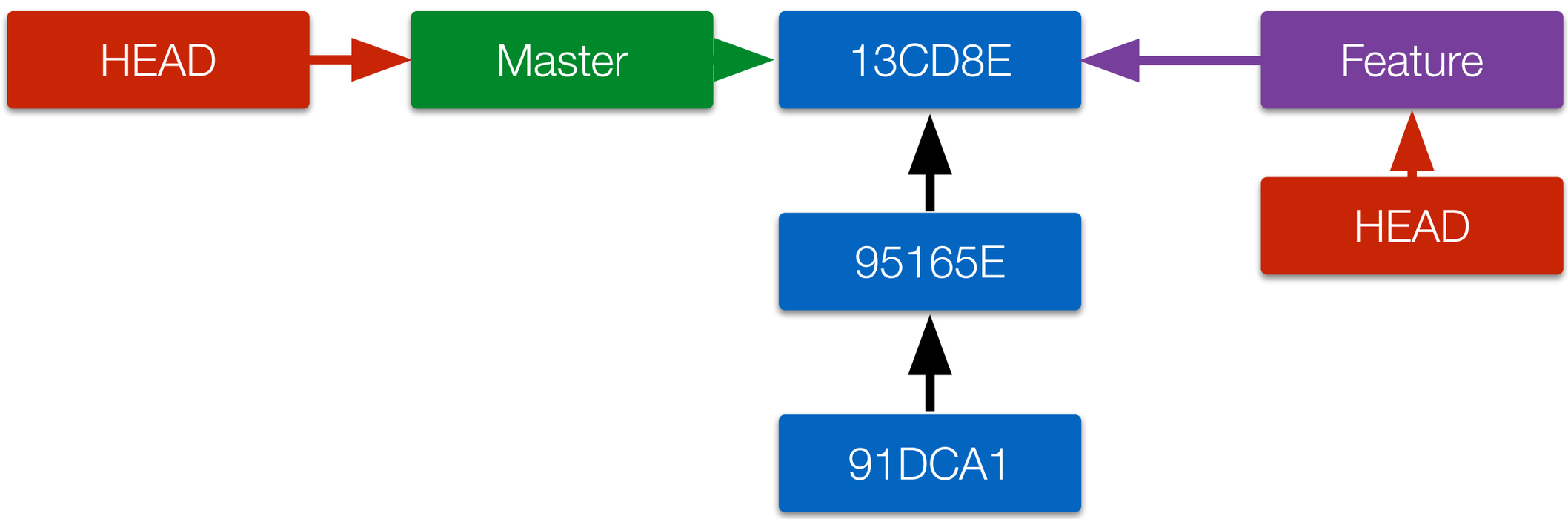

Branching

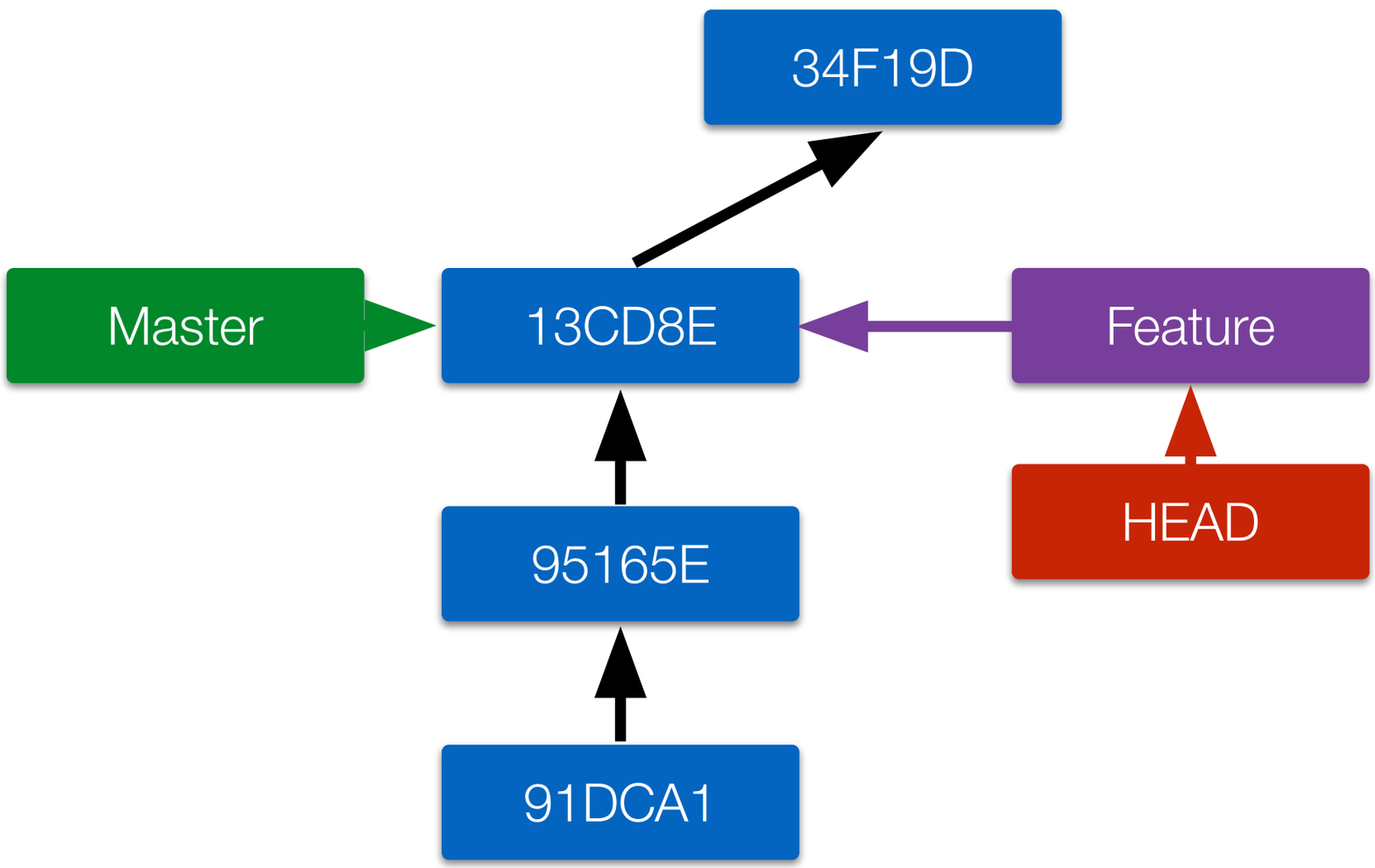

Branching

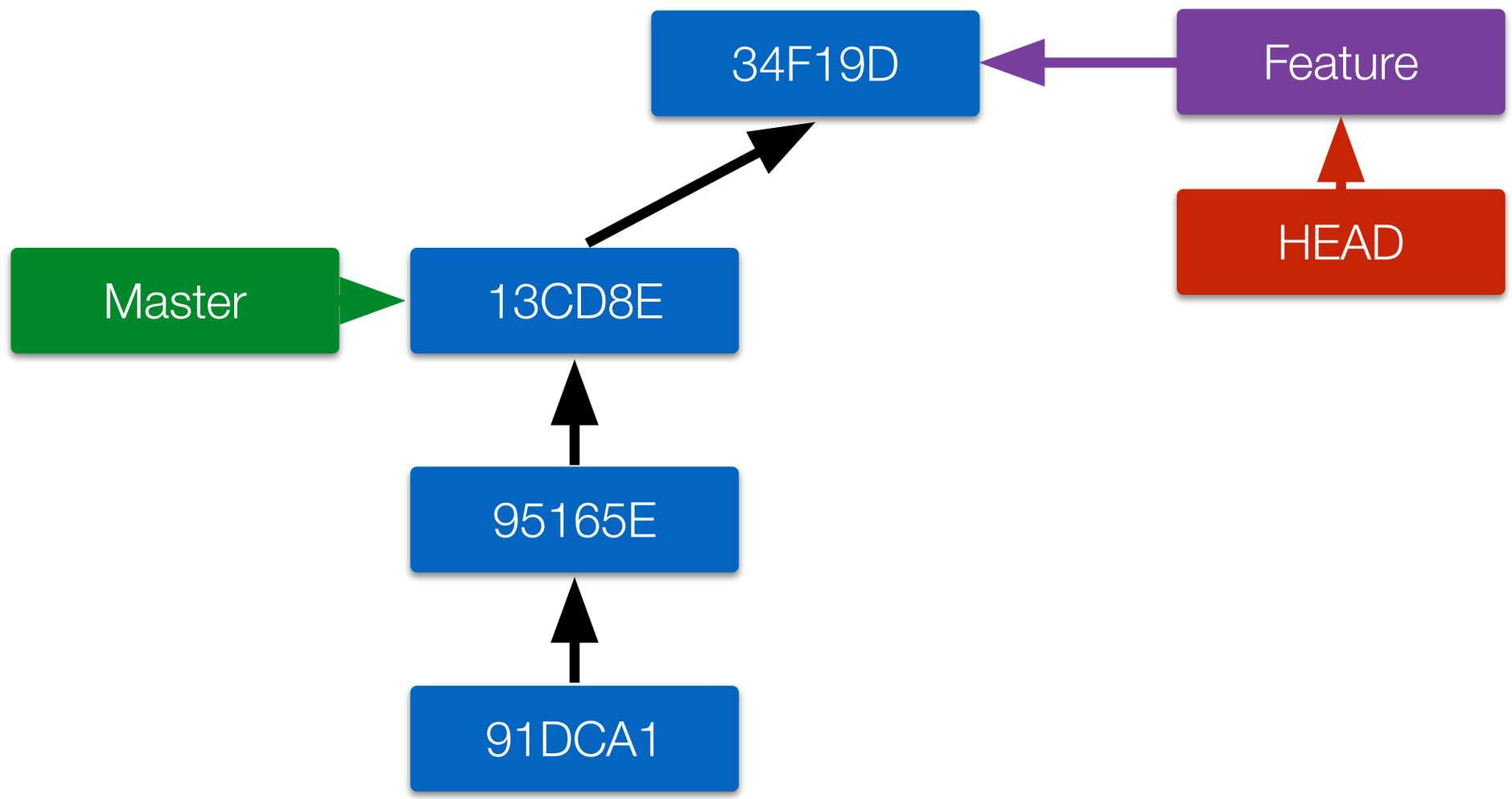

Branching

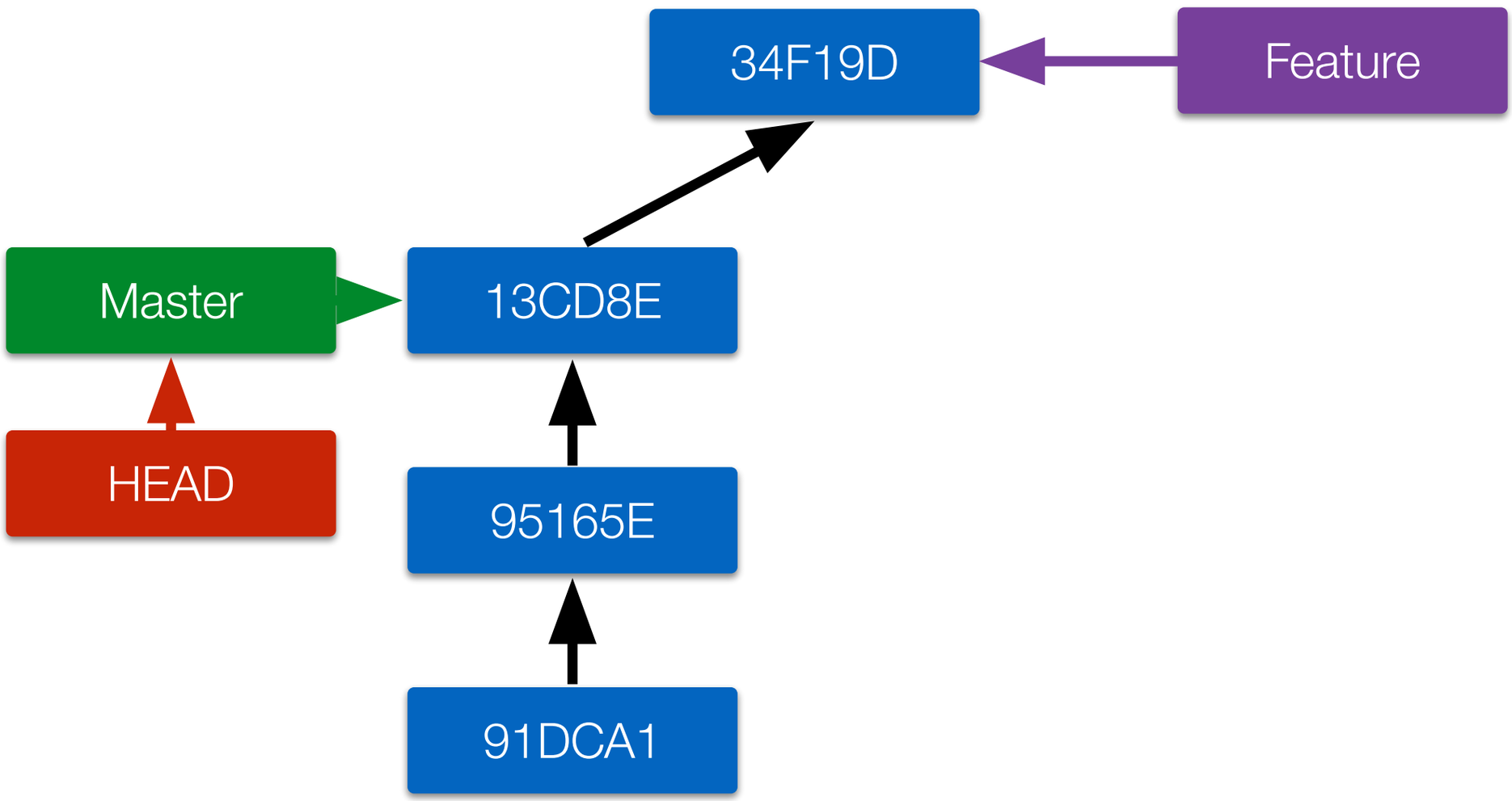

Branching

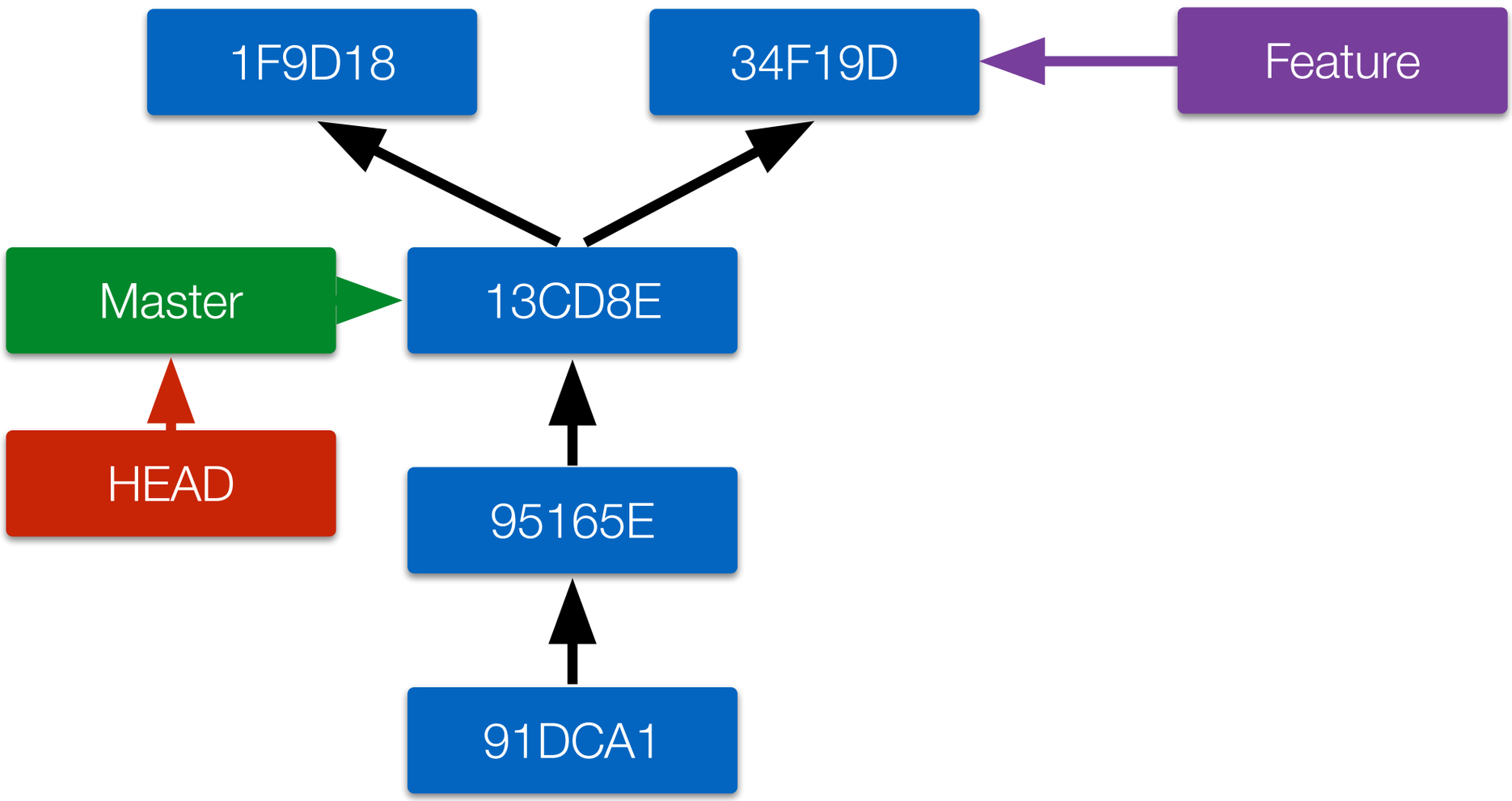

Git Branching

- Creating a new branch (label)

  `git branch [branch name]`

- Checking out the branch (move the HEAD)

  `git checkout [branch name]`

- Combining the above commands (create & checkout)

  `git checkout -b [branch name]`

Merging

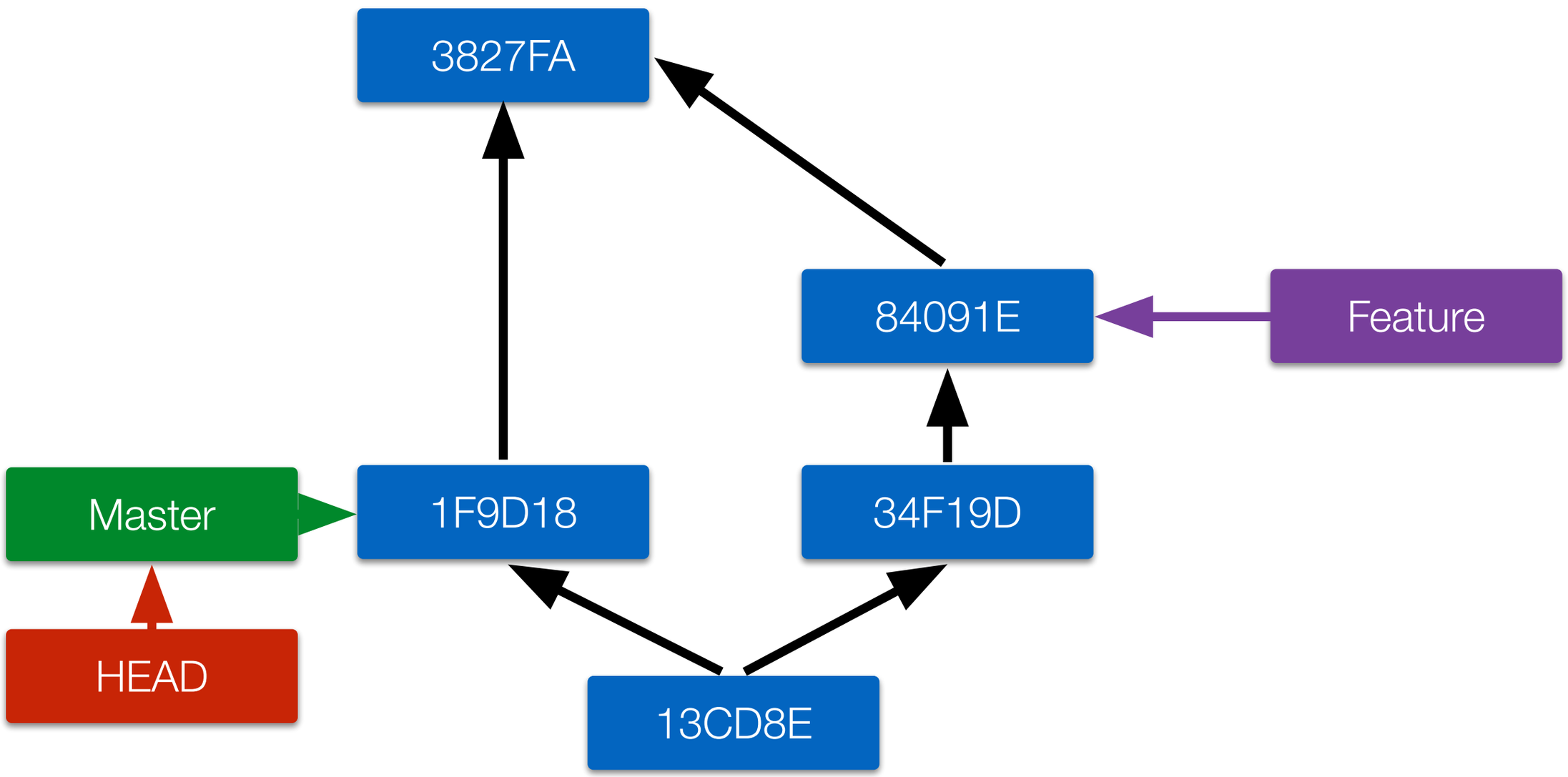

Git Merging

- Merging Steps
  - Checking out a branch to merge

    `git checkout [branch 1 name]`

  - Merging another branch

    `git merge [branch 2 name]`

Outline

- Version control system
- Git basics
- Git branch
- Remote repository

Collaboration with Git

- To work with others using git, you'll need a server that store the repository.
- Git is distributed, which means
  - Everyone can store a copy of the repository downloaded from the server
  - They can do their jobs independently

Collaboration workflow

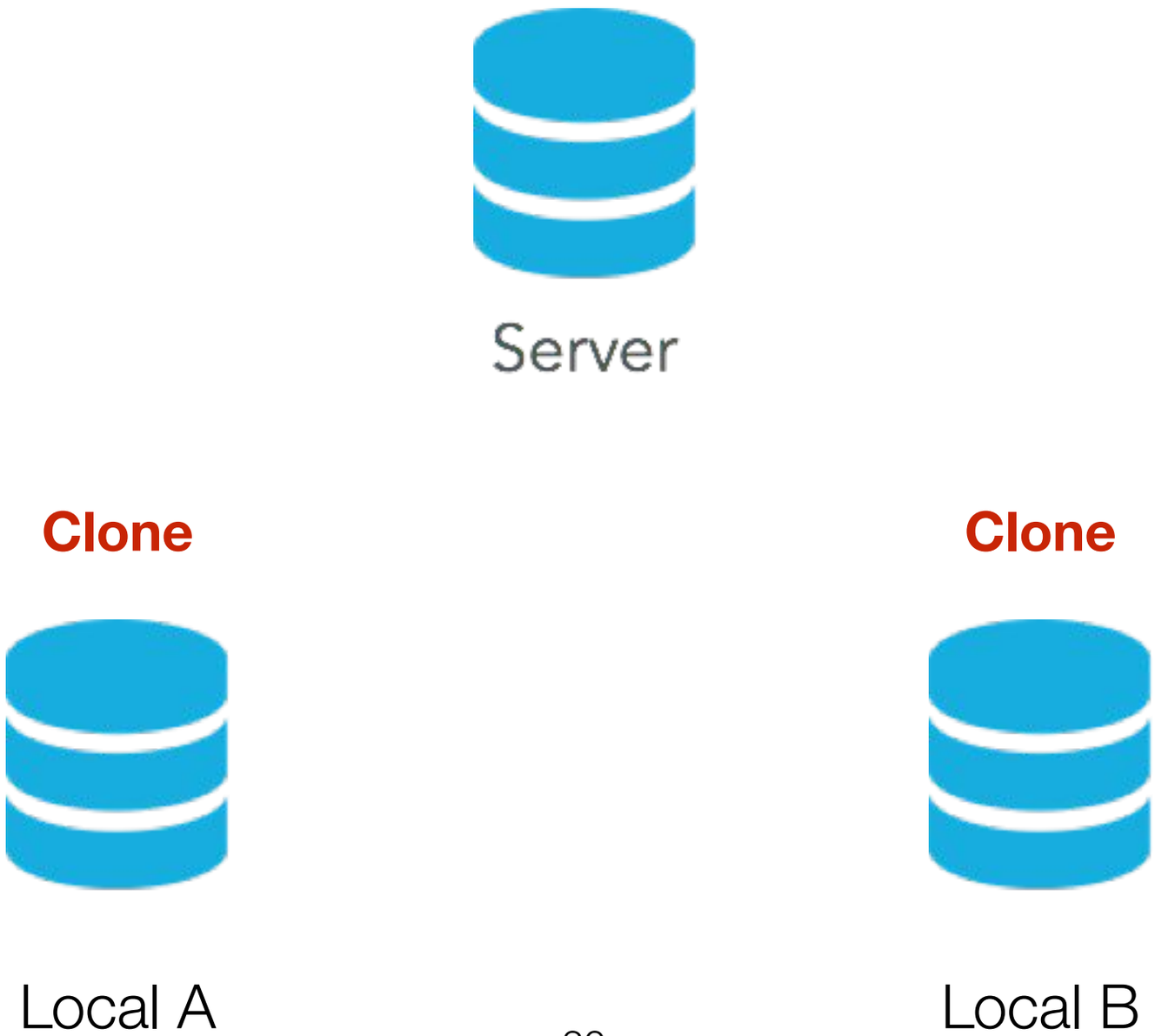

Collaboration workflow

Commit

Local A

Local B

Collaboration workflow

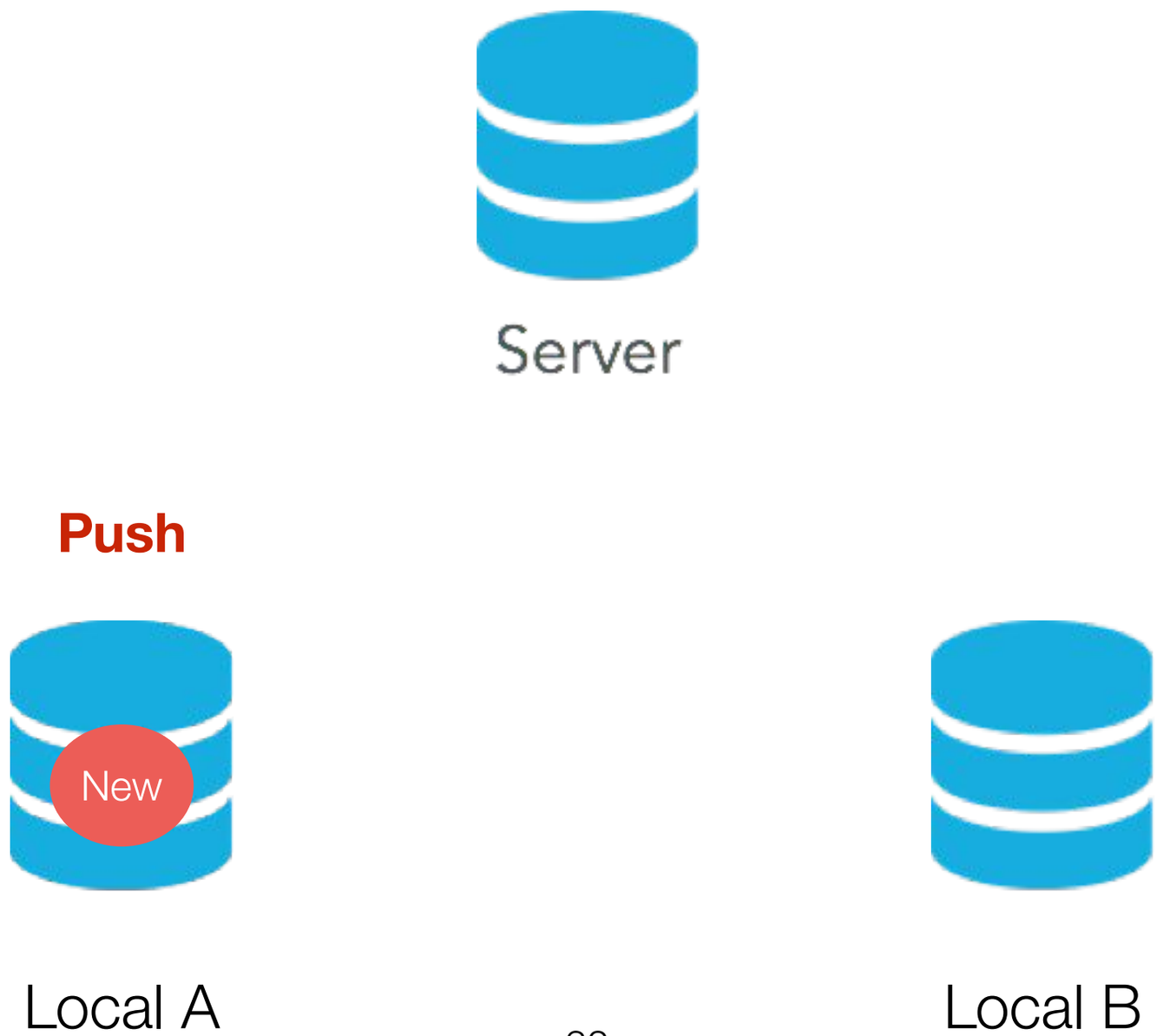

Collaboration workflow

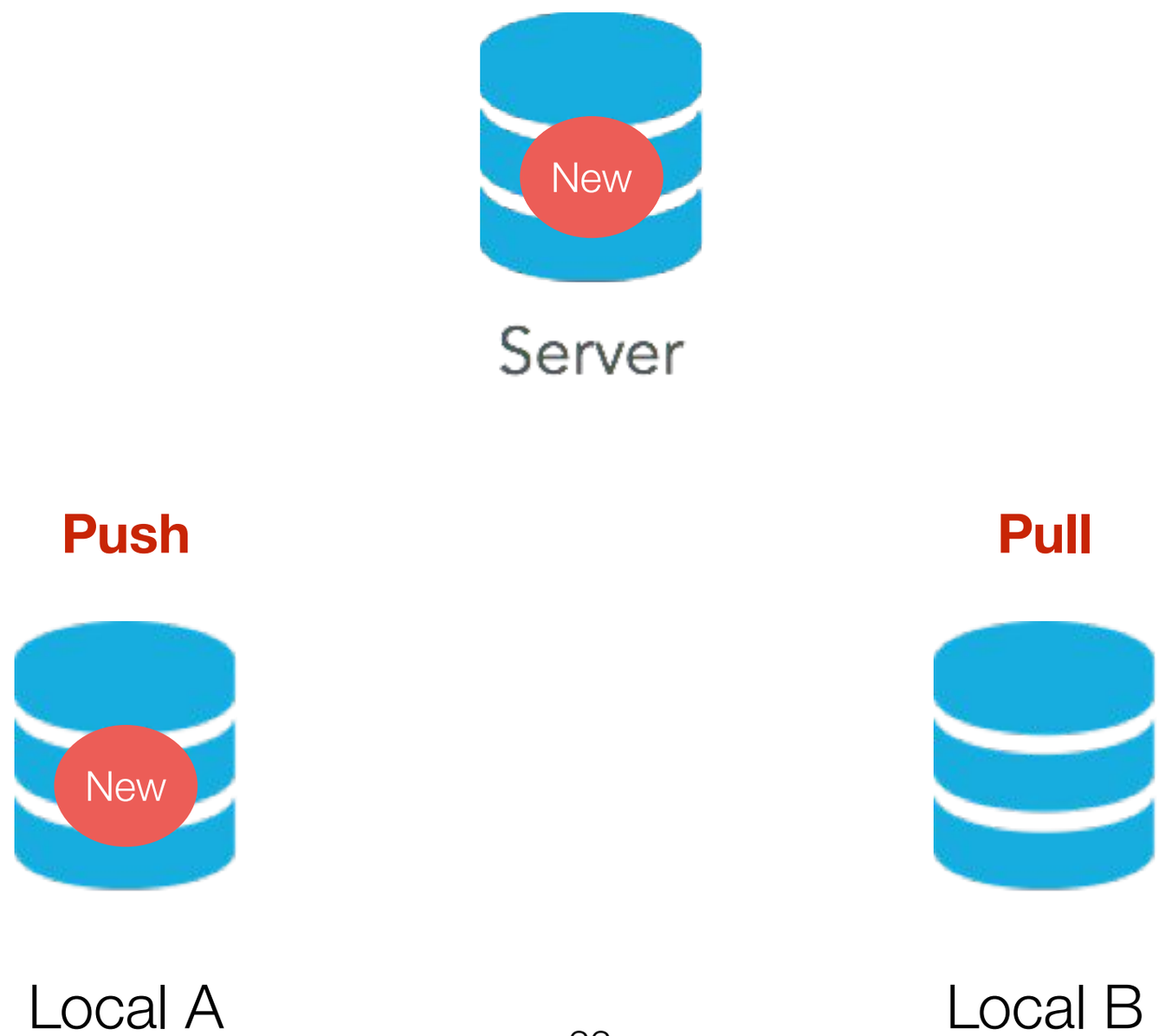

Cloning & Pushing

- Cloning the remote repositories

  `git clone [Remote URL]`

- The [Remote URL] is saved as **Origin**
- After committing a few versions, you can push the branch back to **Origin**

  `git push -u origin [Branch Name]`

Fetch & Pull

- Updating a branch from the remote repository
  - Fetching the remote repository to local
    `git fetch origin`
  - Merging the remote branch
    `git merge origin/[Branch Name]`
- Doing above commands in one command
  `git pull [Branch Name]`

Fork

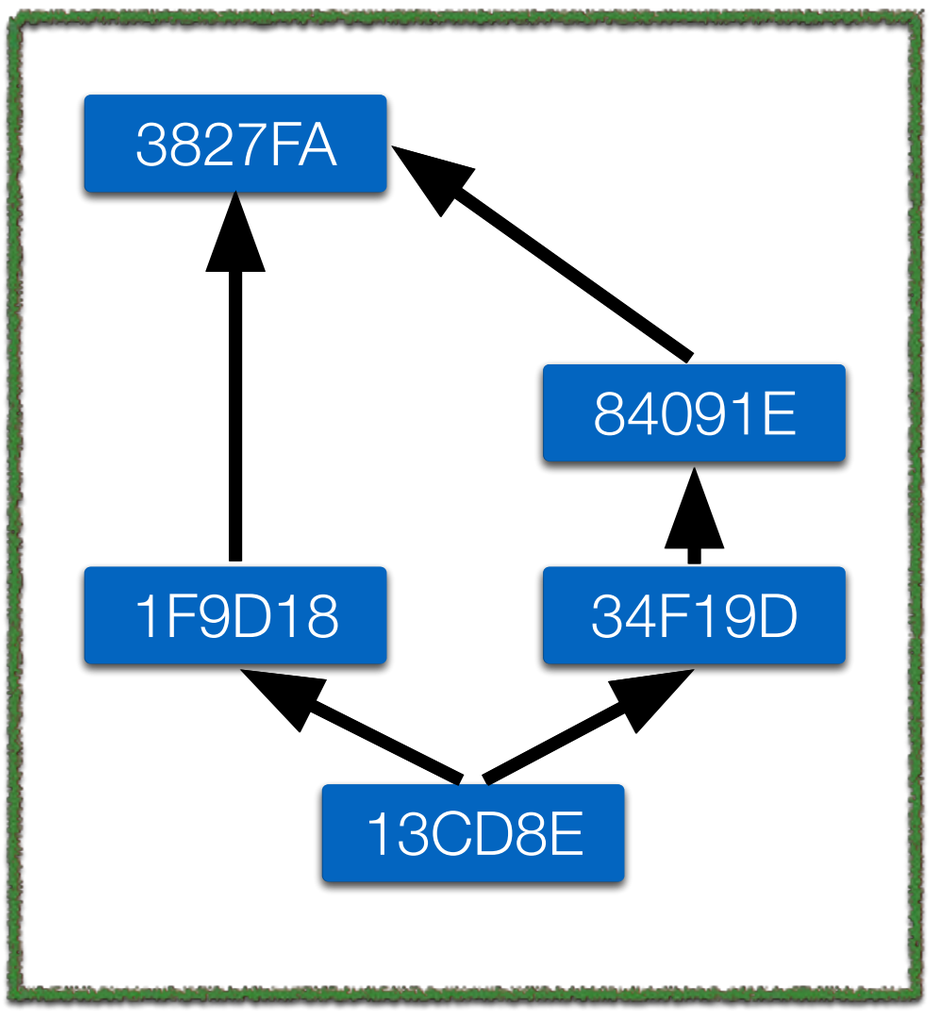

The Repo. Under TA's Account

Fork

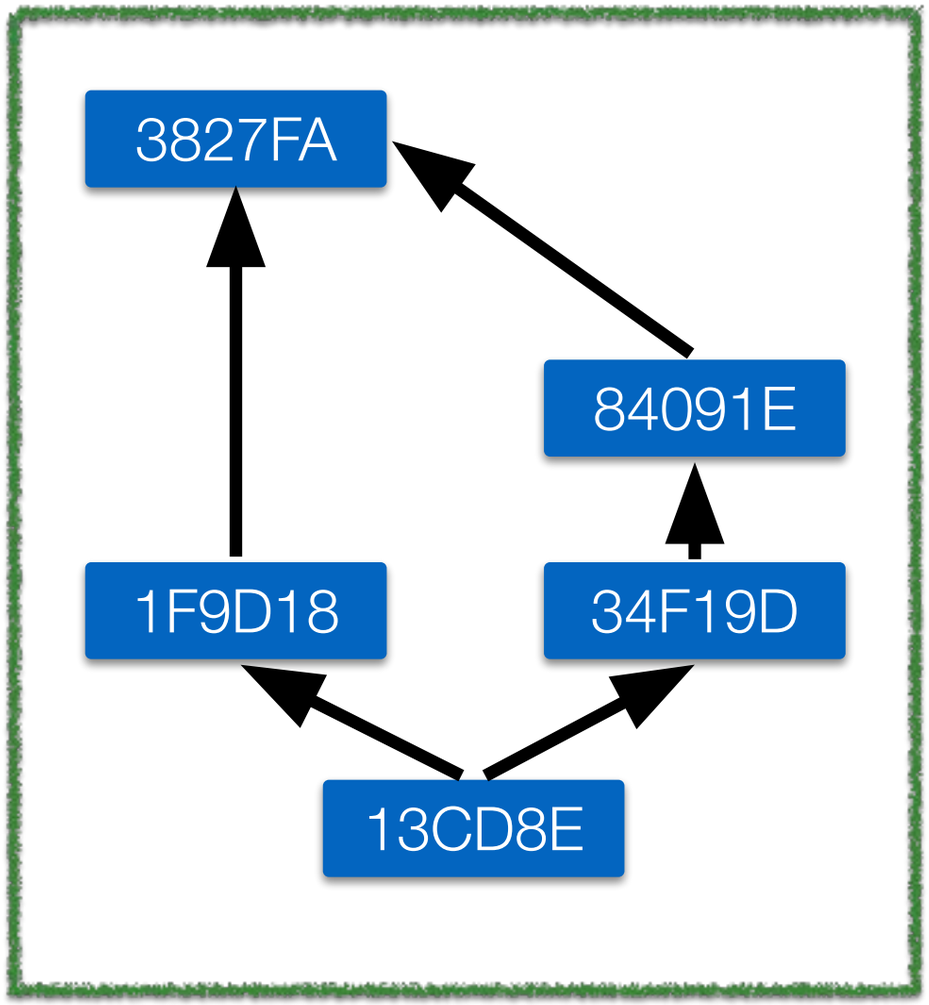

The Repo. Under TA's Account

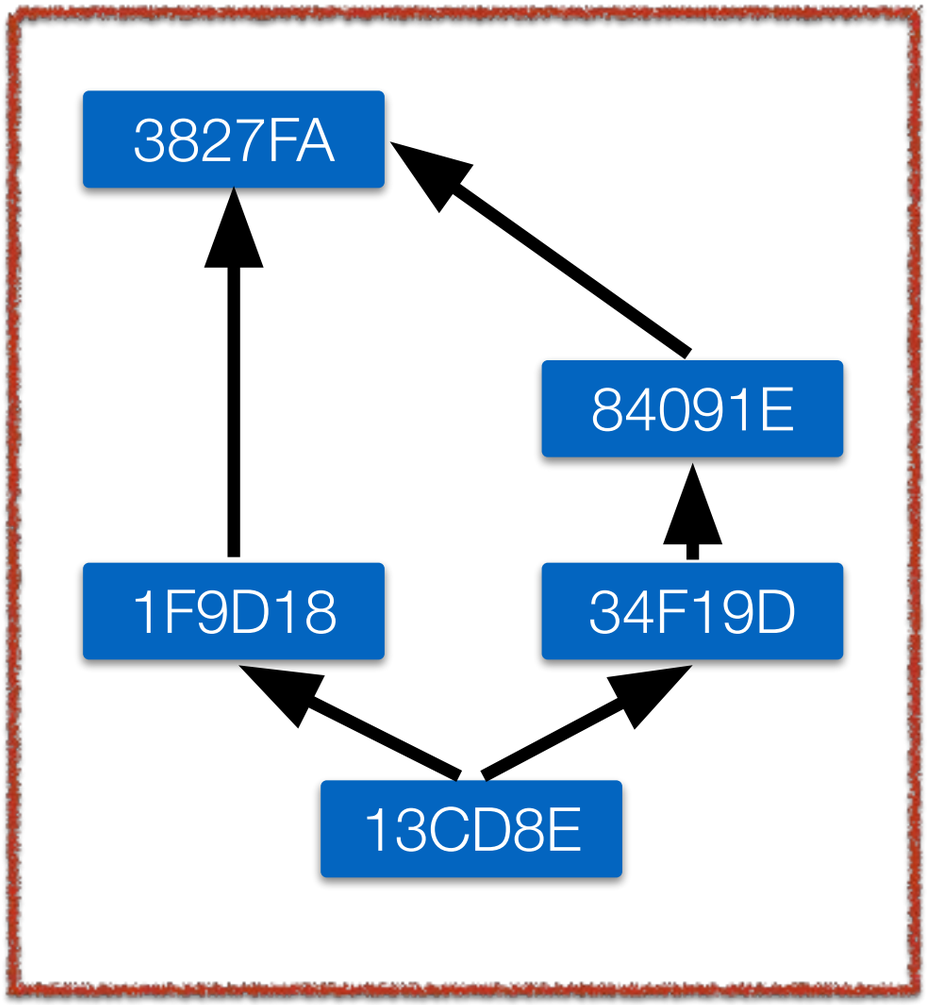

The Repo. Under Your Account

Pull (Merge) Request

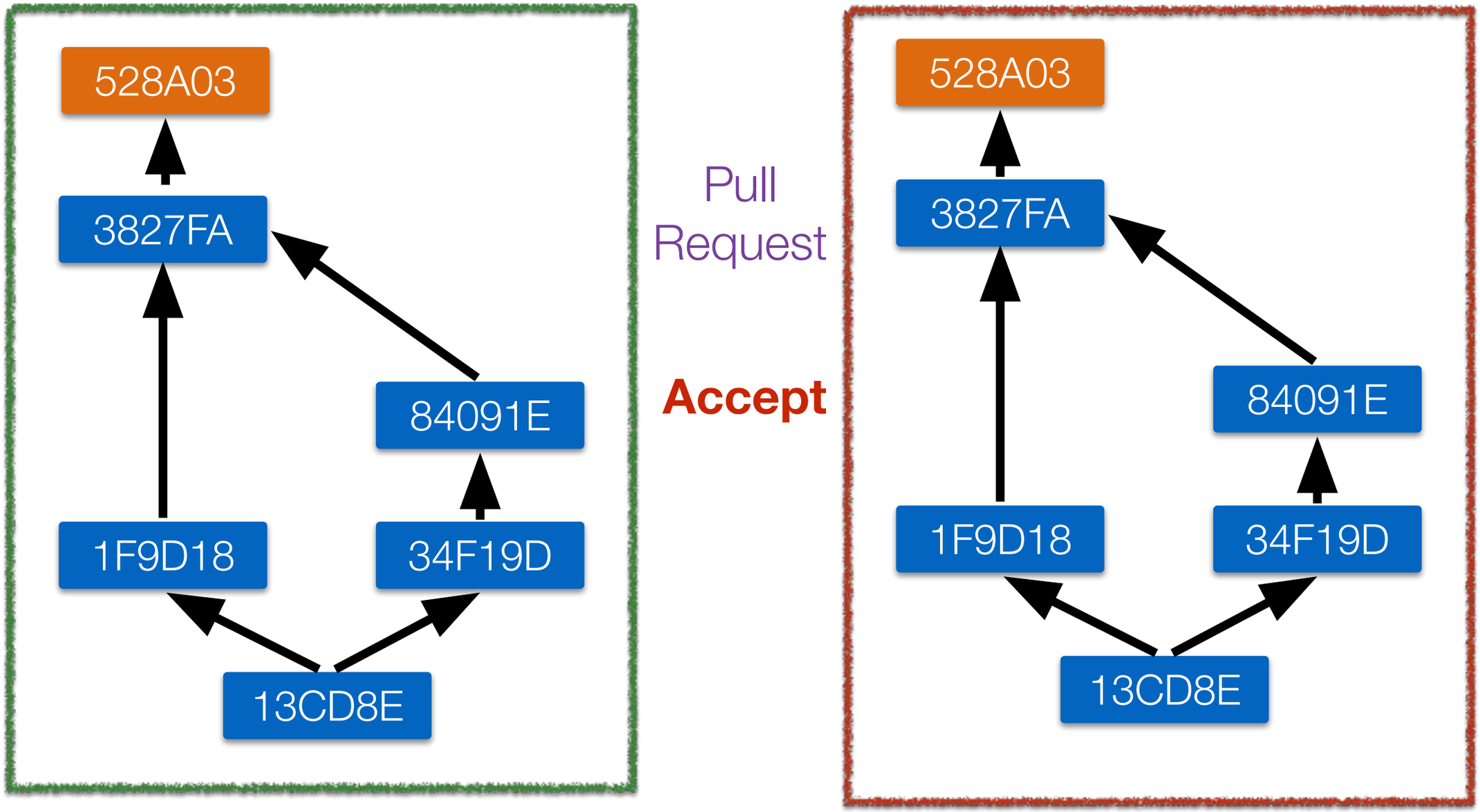

The Repo. Under TA's Account

The Repo. Under Your Account

.gitignore File

- You can ignore some files that you don’t want them to be tracked by editing the .gitignore file
- Remember to track and commit your .gitignore file
- Don’t know what should be in .gitignore ?
  - https://github.com/github/gitignore
  - https://www.gitignore.io/

How to Submit Your Code to Gitlab

Workflow

- For each lab, you should follow the workflow below

1. Fork our template repository on Gitlab
2. Clone the forked repository to your computer
3. Finish your lab
4. Commit in your computer
5. Push to Gitlab
6. Send merge request of your branch to our template repository

Workflow

- For each lab, you should follow the workflow below

1. Fork our template repository on Gitlab
2. Clone the forked repository to your computer
3. Finish your lab
4. Commit in your computer
5. Push to Gitlab
6. Send merge request of your branch to our template repository

GitLab Projects Groups Activity Milestones Snippets Search or jump to...

P practice-submission

- Project
  - Details
  - Activity
  - Releases
  - Cycle Analytics
- Repository
- Issues 0
- Merge Requests 0
- Wiki
- Snippets
- Members

Collapse sidebar

courses › ··· › 2020-spring › practice-submission › Details

P **practice-submission**
Project ID: 9897

Star 0 Fork 0 Clone

No license. All rights reserved · 1 Commit · 1 Branch · 0 Tags · 41 KB Files

master practice-submission / + History Find file Web IDE

Initial commit
Yi-Chun Chen authored 6 hours ago
9af13851

README Auto DevOps enabled

Name	Last commit	Last update
README.md	Initial commit	6 hours ago

README.md

Practice Submission

This repository is built for practicing submissions for assignments and projects. You can follow the instructions below in order to know the whole workflow for submitting an assignment or a project.

Try It !!

GitLab Projects Groups Activity Milestones Snippets Search or jump to...

P practice-submission

Project
Details
Activity
Releases
Cycle Analytics
Repository
Issues 0
Merge Requests 0
Wiki
Snippets
Settings
Collapse sidebar

Pin-Yu Wang > practice-submission > Details

P **practice-submission**
Project ID: 9902

Star 0 Fork 0 Clone

1. Click to fork

Add license 0 Commits 1 Branch 0 Tags 0 Bytes Files

Forked from courses / databases / 2020-spring / practice-submission

master practice-submission / + History Find file Web IDE

Initial commit
Yi-Chun Chen authored 6 hours ago
9af13851

README Add CHANGELOG Add CONTRIBUTING Auto DevOps enabled

Name	Last commit	Last update
README.md	Initial commit	6 hours ago

README.md

Practice Submission

This repository is built for practicing submissions for assignments and projects. You can follow the instructions below in order to know the whole workflow for submitting an assignment or a project.

GitLab Projects Groups Activity Milestones Snippets Search or jump to...

P practice-submission

Project
Details
Activity
Releases
Cycle Analytics
Repository
Issues 0
Merge Requests 0
Wiki
Snippets
Settings

Collapse sidebar

Pin-Yu Wang > practice-submission > Details

2. Check if this repository is under your account

0 Clone

Add license 0 Commits 1 Branch 0 Tags 0 Bytes Files

Forked from courses / databases / 2020-spring / practice-submission

master practice-submission / + History Find file Web IDE

Initial commit
Yi-Chun Chen authored 6 hours ago
9af13851

README Add CHANGELOG Add CONTRIBUTING Auto DevOps enabled

Name	Last commit	Last update
README.md	Initial commit	6 hours ago

3. Go to settings

README.md

Practice Submission

This repository is built for practicing submissions for assignments and projects. You can follow the instructions below in order to know the whole workflow for submitting an assignment or a project.

GitLab Projects Groups Activity Milestones Snippets Search or jump to...

P practice-submission

Project
Repository
Issues 0
Merge Requests 0
Wiki
Snippets
Settings
General
Members
Integrations
Repository

Collapse sidebar

Pin-Yu Wang > practice-submission > General Settings

General project

Update your project name, description, avatar, and other general settings.

Expand

Permissions

Enable or disable cer

Collapse

4. Set project to private

Project visibility

Private

The project is accessible only by members of the project. Access must be granted explicitly to each user.

Issues

Lightweight issue tracking system for this project

Only Project Members

Repository

View and edit files in this project

Only Project Members

Merge requests

Submit changes to be merged upstream

Only Project Members

GitLab Projects Groups Activity Milestones Snippets Search or jump to...

P practice-submission

Project
Repository
Issues 0
Merge Requests 0
Wiki
Snippets
Settings
General
Members
Integrations
Repository
Collapse sidebar

5. Scroll down and save changes

Save changes

Merge request

Customize your merge request restrictions.

Expand

Badges

Customize your project badges. Learn more about badges.

Expand

Export project

Export this project with all its related data in order to move your project to a new GitLab instance. Once the export is finished, you can import the file from the "New Project" page.

Expand

Advanced

Perform advanced options such as housekeeping, archiving, renaming, transferring, or removing your project.

Expand

Workflow

- For each lab, you should follow the workflow below

1. Fork our template repository on Gitlab
2. Clone the forked repository to your computer
3. Finish your lab
4. Commit in your computer
5. Push to Gitlab
6. Send merge request of your branch to our template repository

GitLab Projects Groups Activity Milestones Snippets Search or jump to...

P practice-submission

Project
Details
Activity
Releases
Cycle Analytics
Repository
Issues 0
Merge Requests 0
Wiki
Snippets
Settings
Collapse sidebar

Pin-Yu Wang > practice-submission > Details

P **practice-submission**
Project ID: 9902

Add license 0 Commits 1 Branch 0 Tags 0 Bytes Files

Forked from courses / databases / 2020-spring / practice-submission

Star 0 Fork 0 Clone

Clone with SSH
git@shwu10.cs.nthu.edu.tw:pywa

Clone with HTTPS
https://shwu10.cs.nthu.edu.tw/p

2. Copy the link

1. Choose HTTPS

master practice-submission /

Initial commit
Yi-Chun Chen authored 6 hours ago
9af13851

README Add CHANGELOG Add CONTRIBUTING Auto DevOps enabled

Name	Last commit	Last update
README.md	Initial commit	6 hours ago

README.md

Practice Submission

This repository is built for practicing submissions for assignments and projects. You can follow the instructions below in order to know the whole

https://shwu10.cs.nthu.edu.tw/pywang/practice-submission#

If You use Windows

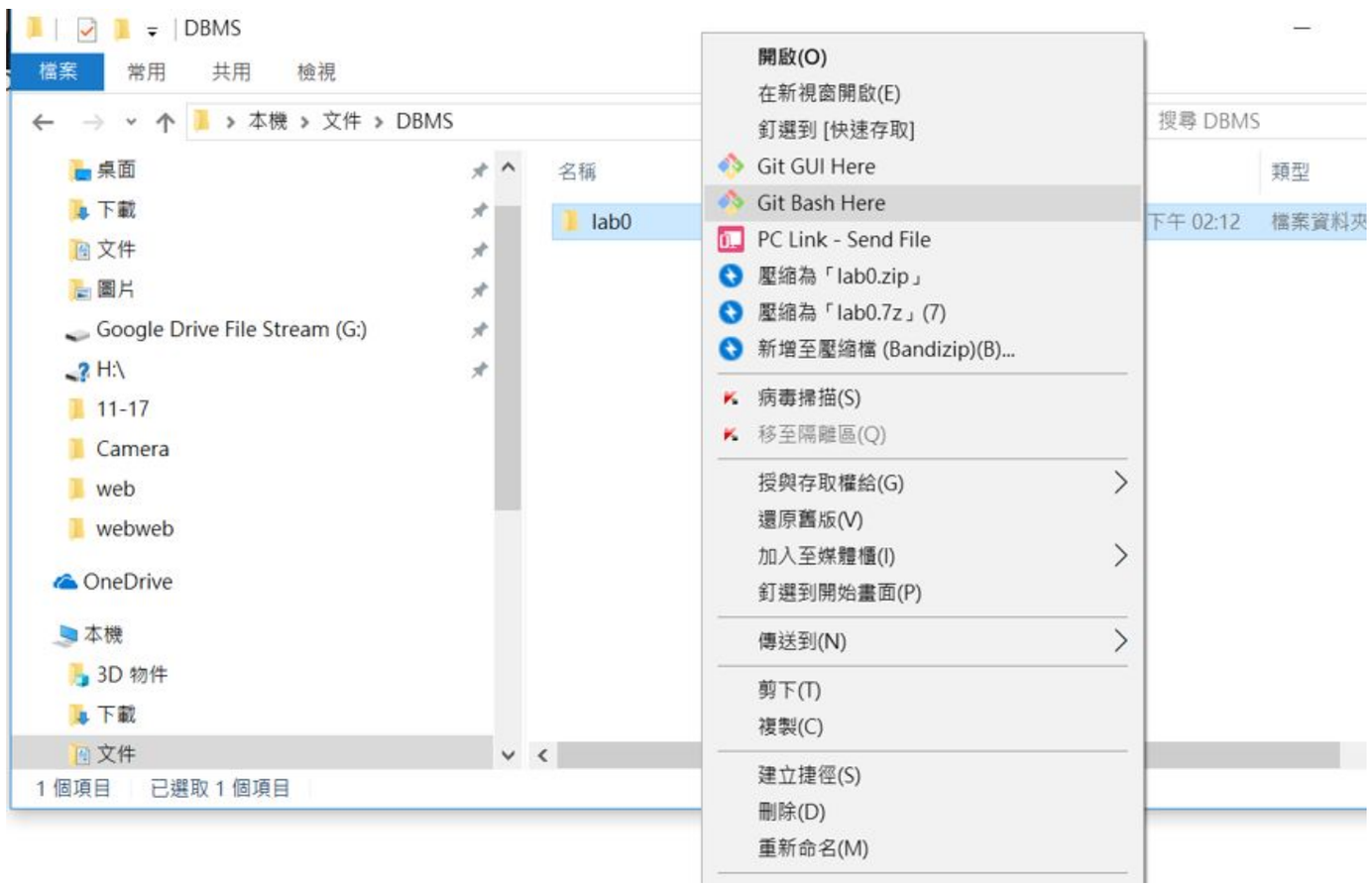

3. Create a folder to put your repos

```
yicchen@LAPTOP-V7AFEOV7 MINGW64 ~/Documents/DBMS/lab0
$ git clone https://shwu10.cs.nthu.edu.tw/ycchen/practice-submission.git
Cloning into 'practice-submission'...
remote: Counting objects: 3, done.
remote: Compressing objects: 100% (2/2), done.
remote: Total 3 (delta 0), reused 3 (delta 0)
Unpacking objects: 100% (3/3), done.

yicchen@LAPTOP-V7AFEOV7 MINGW64 ~/Documents/DBMS/lab0
$ ls
practice-submission/

yicc                                    s/DBMS/lab0
$
```

4. Type "git clone {URL}"

5. The repo has been successfully cloned

Workflow

- For each lab, you should follow the workflow below

1. Fork our template repository on Gitlab
2. Clone the forked repository to your computer
3. Finish your lab
4. Commit in your computer
5. Push to Gitlab
6. Send merge request of your branch to our template repository

Workflow

- For each lab, you should follow the workflow below

1. Fork our template repository on Gitlab
2. Clone the forked repository to your computer
3. Finish your lab
4. Commit in your computer
5. Push to Gitlab
6. Send merge request of your branch to our template repository

```
yicchen@LAPTOP-V7AFEOV7 MINGW64 ~/Documents/DBMS/lab0/practice-submission (master)
$ git add -A
```

1. -A means all files

```
yicchen@LAPTOP-V7AFEOV7 MINGW64 ~/Documents/DBMS/lab0/practice-submission (master)
$ git status
On branch master
Your br                                                    '.

Changes to be committed:
  (use "git reset HEAD <file>..." to unstage)

        new file:   practice.txt
```

2. Check if your file is added to git

```
yicchen@LAPTOP-V7AFEOV7 MINGW64 ~/Documents/DBMS/lab0/practice-submission (master)
$ git commit -m "Finish"
[master 93a03d5] Finish
 1 file cha
 create mod
```

3. Commit your changes

```
icchen@LAPTOP-V7AFEOV7 MINGW64 ~/Documents/DBMS/lab0/practice-submission (master)
 git commit -m "Finish"

** Please tell me who you are.

un

 git config --global user.email "you@example.com"
 git config --global user.name "Your Name"

o set your account's default identity.
mit --global to set the identity only in this repository

atal: unable to auto-detect email address (got 'yicchen@LAPTOP-V7AFEOV7.(none)')
```

If you see these message, type
git config --global user.name "{name}"
git config --global user.email "{email}"

{email} is the email you use on gitlab

Workflow

- For each lab, you should follow the workflow below

1. Fork our template repository on Gitlab
2. Clone the forked repository to your computer
3. Finish your lab
4. Commit in your computer
5. Push to Gitlab
6. Send merge request of your branch to our template repository

```
yicchen@LAPTOP-V7AFEOV7 MINGW64 ~/Documents/DBMS/lab0/practice-submission (master)
$ git push origin master
Counting objects: 3, done.
Delta compression
Compressing object
Writing objects: 100% (3/3), 284 bytes | 284.00 KiB/s, done.
Total 3 (delta 0), reused 0 (delta 0)
To https://shwu10.cs.nthu.edu.tw/ycchen/practice-submission.git
   21e2fda..93a03d5  master -> master
```

Type "git push -u origin master"

Workflow

- For each lab, you should follow the workflow below

1. Fork our template repository on Gitlab
2. Clone the forked repository to your computer
3. Finish your lab
4. Commit in your computer
5. Push to Gitlab
6. Send merge request of your branch to our template repository

GitLab Projects Groups Activity Milestones Snippets Search or jump to...

P practice-submission

Project
Details
Activity
Releases
Cycle Analytics

Repository

Issues 0

Merge Requests

1. Click Merge Requests

Wiki

Snippets

Members

Collapse sidebar

courses › ··· › 2020-spring › practice-submission › Details

P **practice-submission**
Project ID: 9897

Star 0 Fork 0 Clone

No license. All rights reserved 1 Commit 1 Branch 0 Tags 41 KB Files

master practice-submission / + History Find file Web IDE

Initial commit
Yi-Chun Chen authored 6 hours ago 9af13851

Name	Last commit	Last update
README.md	Initial commit	6 hours ago

README.md

Practice Submission

This repository is built for practicing submissions for assignments and projects. You can follow the instructions below in order to know the whole workflow for submitting an assignment or a project.

GitLab Projects Groups Activity Milestones Snippets Search or jump to...

P practice-submission

- Project
- Repository
- Issues 0
- Merge Requests 0
- Wiki
- Snippets
- Members

Collapse sidebar

courses › ··· › 2020-spring › practice-submission › Merge Requests

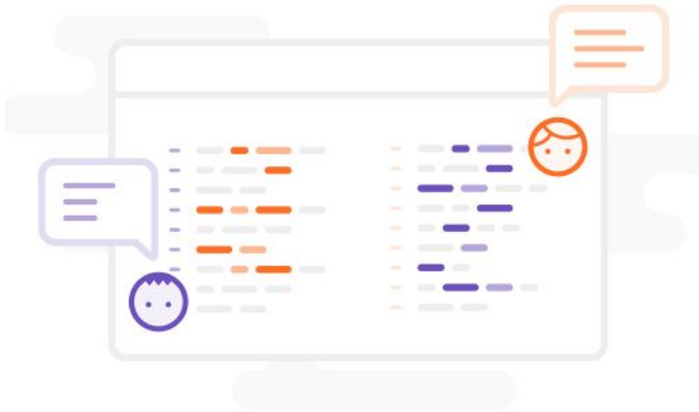

Merge requests are a place to propose changes you've made to a project and discuss those changes with others

Interested parties can even contribute by pushing commits if they want to.

New merge request

2. New merge request

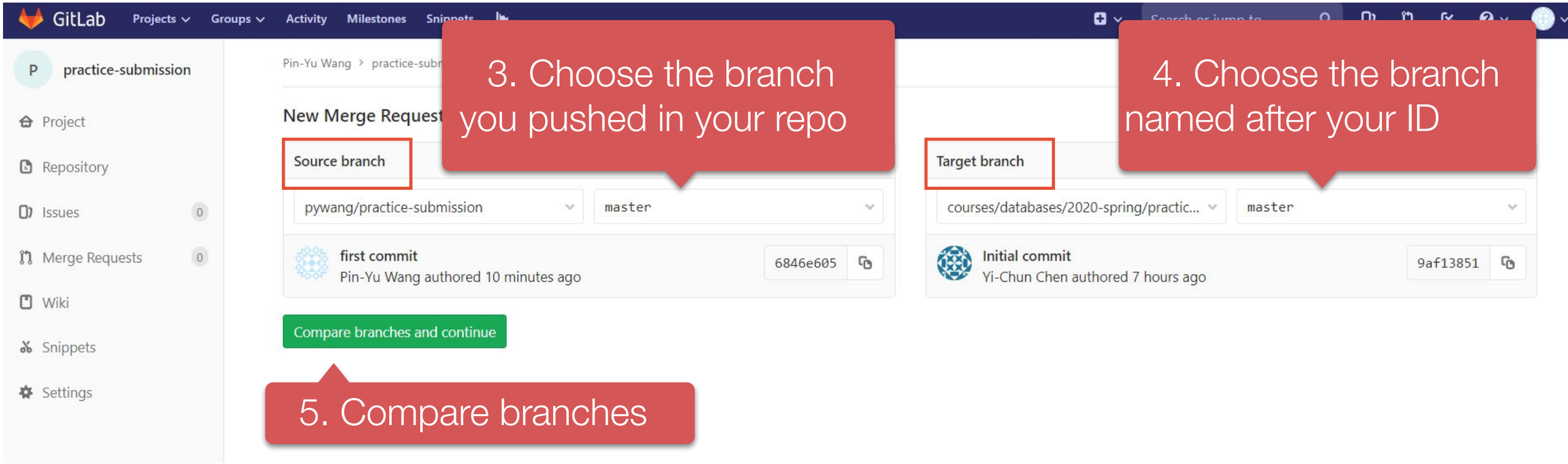
GitLab
Projects
Groups
Activity
Milestones
Snippets
practice-submission
Project
Repository
Issues 0
Merge Requests 0
Wiki
Snippets
Settings
Pin-Yu Wang › practice-subm
New Merge Request
3. Choose the branch you pushed in your repo
4. Choose the branch named after your ID
Source branch
pywang/practice-submission
master
first commit
Pin-Yu Wang authored 10 minutes ago
6846e605
Target branch
courses/databases/2020-spring/practic...
master
Initial commit
Yi-Chun Chen authored 7 hours ago
9af13851
Compare branches and continue
5. Compare branches

GitLab Projects Groups Activity Milestones Snippets This project Search

P practice-submission

Project
Repository
Issues 0
Merge Requests 0
Wiki
Snippets
Settings

New Merge Request

From `ycchen/practice-sul`

6. Set title to "{ID} Submission"

Change branches

Title: std107000000 Submission

Start the title with `WIP:` to prevent a **Work In Progress** merge request from being merged before it's ready.

Add description templates to help your contributors communicate effectively!

Description

Write Preview

finish

Markdown and quick actions are supported

Attach a file

Assignee: Assignee — Assign to me

Milestone: Milestone

Labels: Labels

Source branch: master

Target branch: 107000000 — Change branches

Squash commits when merge request is accepted. About this feature

GitLab Projects Groups Activity Milestones Snippets This project Search

P practice-submission

Project
Repository
Issues 0
Merge Requests 0
Wiki
Snippets
Settings

Markdown and quick actions are supported Attach a file

Assignee Assignee Assign to me

Milestone Milestone

Labels Labels

Source branch master

Target branch 107000000 Change branches

Squash commits when merge request is accepted. About this feature

Contribution Allow commits from members who can merge to the target branch. About this feature

Submit merge request Cancel

7. If everything is OK, submit your merge request

Commits 1 Changes 1

24 Feb, 2019 1 commit

Finish
Your Name authored 55 minutes ago 93a03d56

Collapse sidebar

Reference

- Learn Git branching (interactive)
  - http://pcottle.github.io/learnGitBranching/
- Pro Git
  - http://git-scm.com/book/
- 寫給大家的 Git 教學
  - http://www.slideshare.net/littlebtc/git-5528339