VanillaCore Walkthrough Part 3

Introduction to Database Systems

DataLab

CS, NTHU

Today's Focus

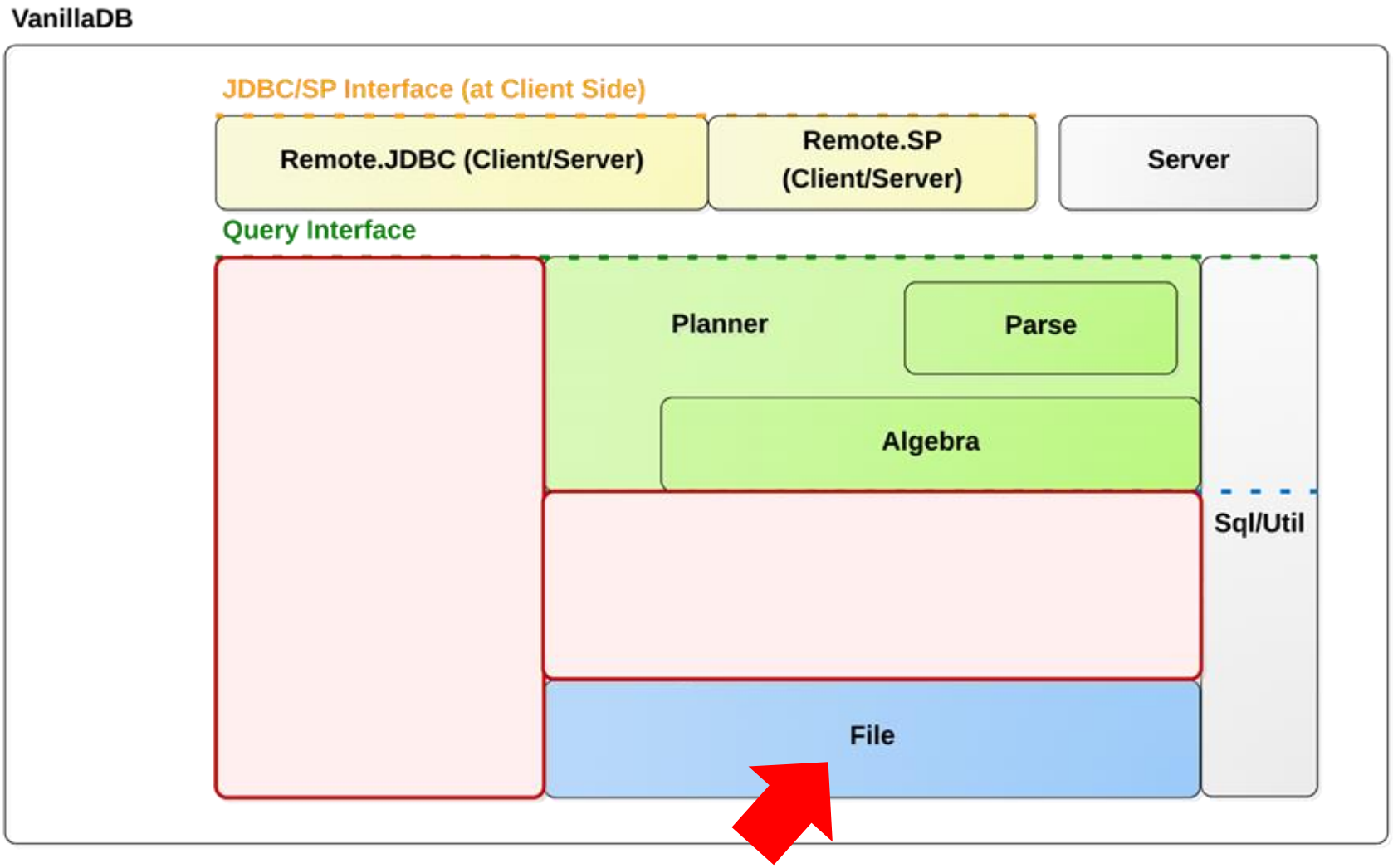

The Mission

- The `file` package processes all file access requests in VanillaCore
  - Reading a block from a file
  - Writing a block to a file
  - Appending a block to a file
  - Deleting a file

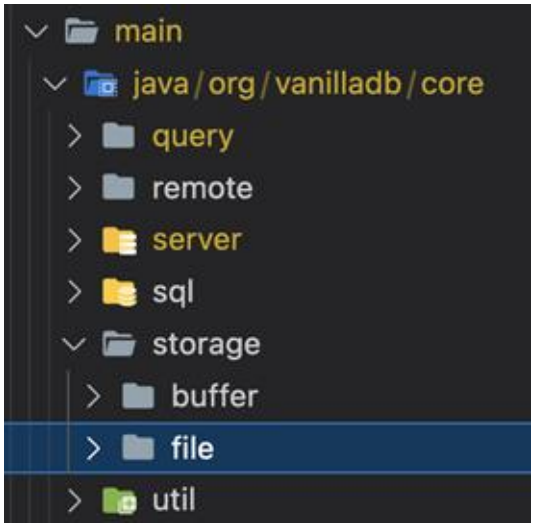

`file` Package

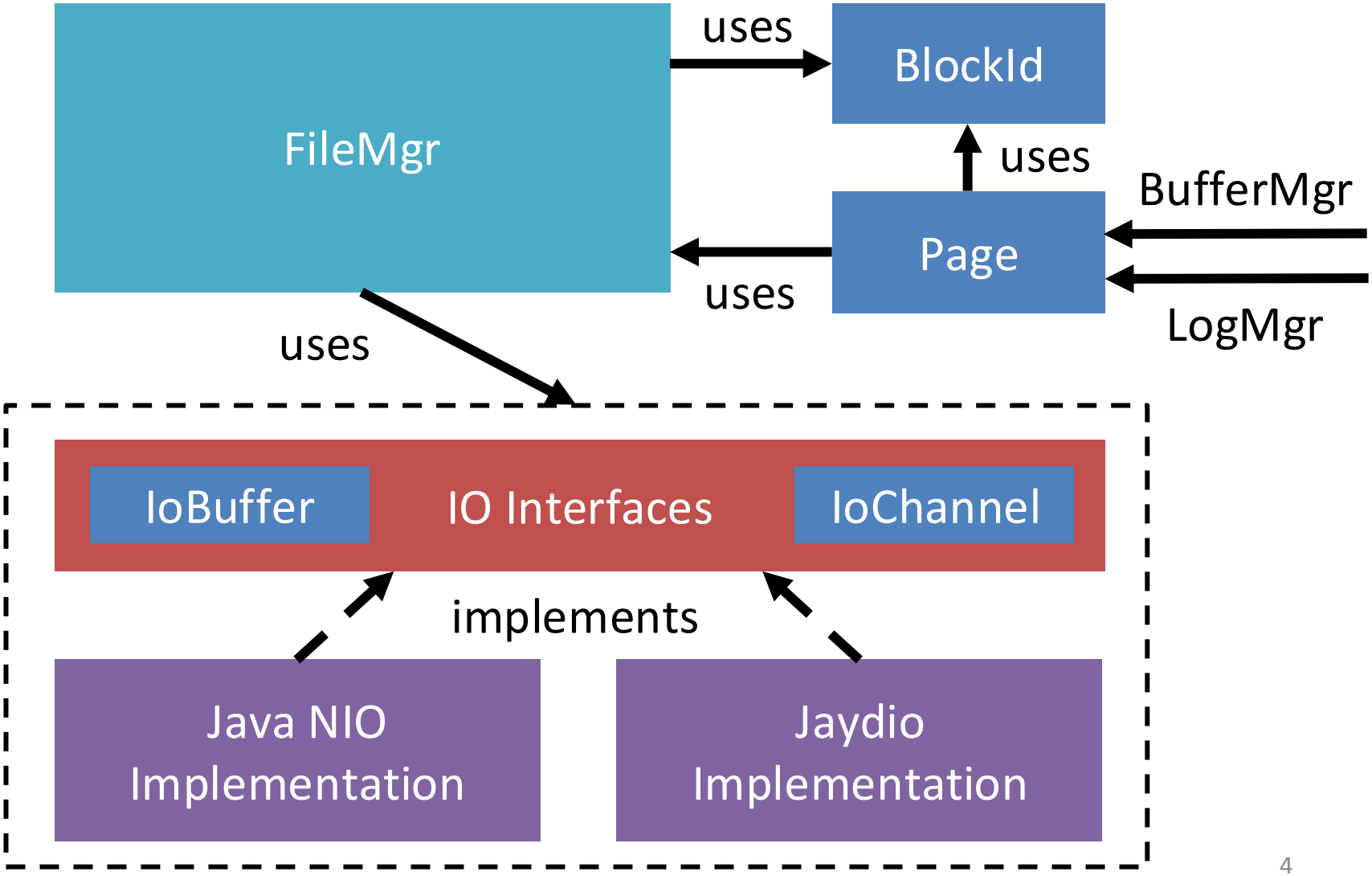

Functionality

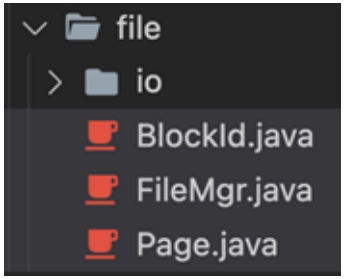

- Main Components
  - `BlockId`: represents the physical position of a block
  - `Page`: represents a memory region to hold a block
  - `FileMgr`: manages file access

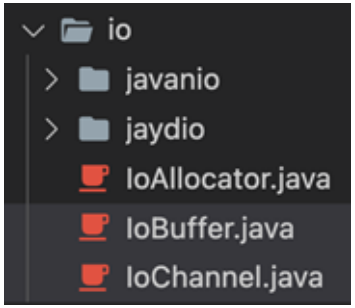

- Low-level APIs to operating systems
  - `IoBuffer`: provides the API to manage a memory region
  - `IoChannel`: provides the API to access a file

Functionality

- Main Components
  - `BlockId`: represents the physical position of a block
  - `Page`: represents a memory region to hold a block
  - `FileMgr`: manages file access

- Low-level APIs to operating systems
  - `IoBuffer`: provides the API to manage a memory region
  - `IoChannel`: provides the API to access a file

BlockId

```java
public class BlockId {
    private String fileName;
    private long blkNum;

    public BlockId(String fileName, long blkNum) {
        this.fileName = fileName;
        this.blkNum = blkNum;
    }

    public String fileName() {
        return fileName;
    }

    public long number() {
        return blkNum;
    }
    ...
}
```

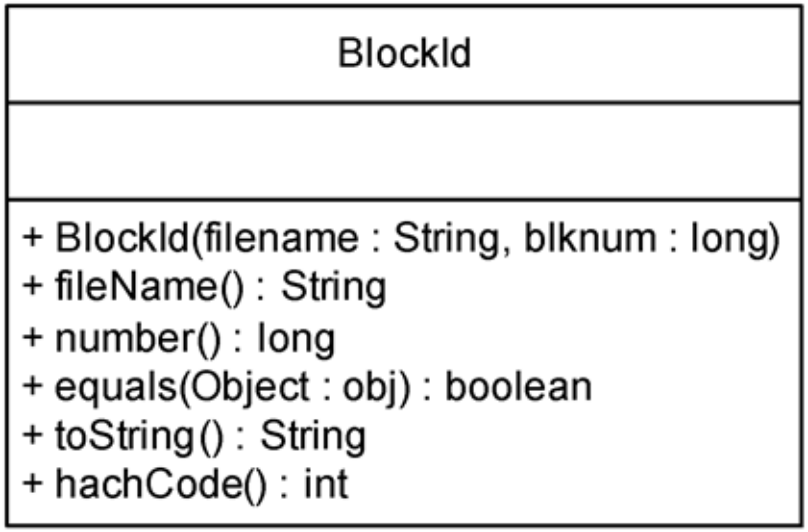

core-patch/src/main/java/org/vanilladb/core/storage/file/BlockId.java

BlockId

```java
@Override
public boolean equals(Object obj) {
    if (obj == this)
        return true;
    if (obj == null || !(obj.getClass().equals(BlockId.class)))
        return false;
    BlockId blk = (BlockId) obj;
    return fileName.equals(blk.fileName) && blkNum == blk.blkNum;
}
```

```java
@Override
public String toString() {
    return "[file " + fileName + ", block " + blkNum + "]";
}
```

```java
@Override
public int hashCode() {
    return toString().hashCode();
}
```

BlockId
+ BlockId(filename : String, blknum : long) + fileName() : String + number() : long + equals(Object : obj) : boolean + toString() : String + hachCode() : int

core-patch/src/main/java/org/vanilladb/core/storage/file/BlockId.java

Functionality

- Main Components
  - `BlockId`: represents the physical position of a block
  - `Page`: represents a memory region to hold a block
  - `FileMgr`: manages file access

- Low-level APIs to operating systems
  - `IoBuffer`: provides the API to manage a memory region
  - `IoChannel`: provides the API to access a file

Page

Page

<<final>> + BLOCK_SIZE : int

+ maxSize(type : Type) : int
+ size(val : Constant) : int

+ Page()
<<synchronized>> + read(blk : BlockId)
<<synchronized>> + write(blk : BlockId)
<<synchronized>> + append(filename : String) : BlockId
<<synchronized>> + getVal(offset : int, type : Type) : Constant
<<synchronized>> + setVal(offset : int, val : Constant)
+ close()

Page

A

B

```
Page
<<final>> + BLOCK_SIZE : int

+ maxSize(type : Type) : int
+ size(val : Constant) : int

+ Page()
<<synchronized>> + read(blk : BlockId)
<<synchronized>> + write(blk : BlockId)
<<synchronized>> + append(filename : String) : BlockId
<<synchronized>> + getVal(offset : int, type : Type) : Constant
<<synchronized>> + setVal(offset : int, val : Constant)
+ close()
```

Write:

1. setVal()
2. write()

Page

- Backed by `IoBuffer`

```
private IoBuffer contents =
IoAllocator.newIoBuffer(BLOCK_SIZE);
```

- Translate constants using `Constant.asBytes()`
  - Fixed length for numeric type constants (e.g., 4 bytes for `IntegerConstant`)
  - Variable length for `VarcharConstant`
- How to reconstruct a varchar constant in getter?

Storing A Varchar

- `Page` stores a Varchar in two parts
  - The first is the length of those bytes
  - The second is the bytes from `asByte()`

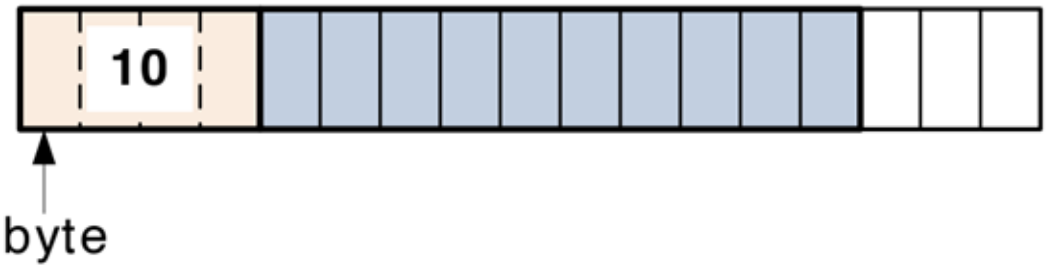

setVal

```
public synchronized void setVal(int offset, Constant val) {
    byte[] byteval = val.asBytes();

    // Append the size of value if it is not fixed size
    if (!val.getType().isFixedSize()) {
        // check the field capacity and value size
        if (offset + ByteHelper.INT_SIZE + byteval.length > BLOCK_SIZE)
            throw new BufferOverflowException();

        byte[] sizeBytes = ByteHelper.toBytes(byteval.length);
        contents.put(offset, sizeBytes);
        offset += sizeBytes.length;
    }

    // Put bytes
    contents.put(offset, byteval);
}
```

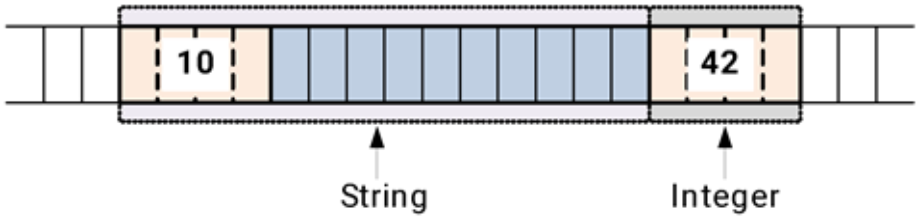

core-patch/src/main/java/org/vanilladb/core/storage/file/Page.java

getVal

```
public synchronized Constant getVal(int offset, Type type) {
    int size;
    byte[] byteVal = null;

    // Check the length of bytes
    if (type.isFixedSize()) {
        size = type.maxSize();
    } else {
        byteVal = new byte[ByteHelper.INT_SIZE];
        contents.get(offset, byteVal);
        size = ByteHelper.toInteger(byteVal);
        offset += ByteHelper.INT_SIZE;
    }

    // Get bytes and translate it to Constant
    byteVal = new byte[size];
    contents.get(offset, byteVal);
    return Constant.newInstance(type, byteVal);
}
```

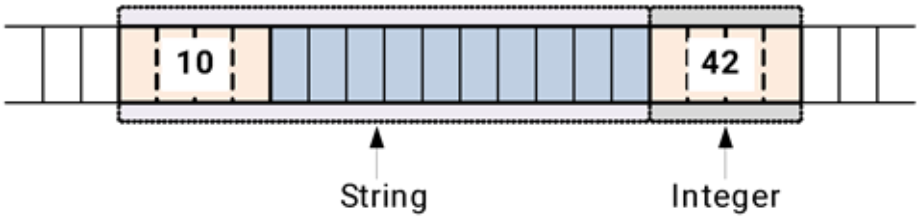

core-patch/src/main/java/org/vanilladb/core/storage/file/Page.java

Sizing Information

- There are static APIs providing sizing information in Page

```
public static int maxSize(Type type) {
    return type.isFixedSize() ? type.maxSize() : ByteHelper.INT_SIZE
            + type.maxSize();
}

public static int size(Constant val) {
    return val.getType().isFixedSize() ? val.size() : ByteHelper.INT_SIZE
            + val.size();
}
```

File I/Os

```
public Page() {
}

public synchronized void read(BlockId blk) {
    fileMgr.read(blk, contents);
}

public synchronized void write(BlockId blk) {
    fileMgr.write(blk, contents);
}

public synchronized BlockId append(String fileName) {
    return fileMgr.append(fileName, contents);
}
```

Functionality

- Main Components
  - `BlockId`: represents the physical position of a block
  - `Page`: represents a memory region to hold a block
  - `FileMgr`: manages file access

- Low-level APIs to operating systems
  - `IoBuffer`: provides the API to manage a memory region
  - `IoChannel`: provides the API to access a file

FileMgr

- Handles the actual I/Os
- Keeps the `IoChannel` instances of all opened files

```
FileMgr
---------------------------------------------------------
<<final>> + DB_FILES_DIR : String
<<final>> + LOG_FILES_DIR : String
<<final>> + TMP_FILE_NAME_PREFIX : String
---------------------------------------------------------
+ FileMgr(dbname : String)
<<synchronized>> ~ read(blk : BlockId, buffer : IoBuffer)
<<synchronized>> ~ write(blk : BlockId, buffer : IoBuffer)
<<synchronized>> ~ append(filename : String, buffer : IoBuffer) : BlockId
<<synchronized>> + size(filename : String) : long
+ isNew() : boolean
+ rebuildLogFile()
```

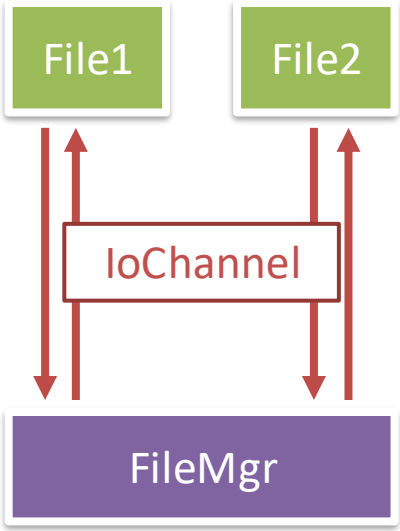

`FileMgr`

- A page delegates `read`, `write` and, `append` to `FileMgr`
- Note that the file manager always reads/writes/appends a ***block-sized*** number of bytes from/to a file
  - Exactly one disk access per call

Functionality

- Main Components
  - `BlockId`: represents the physical position of a block
  - `Page`: represents a memory region to hold a block
  - `FileMgr`: manages file access

- Low-level APIs to operating systems
  - `IoBuffer`: provides the API to manage a memory region
  - `IoChannel`: provides the API to access a file

file.io

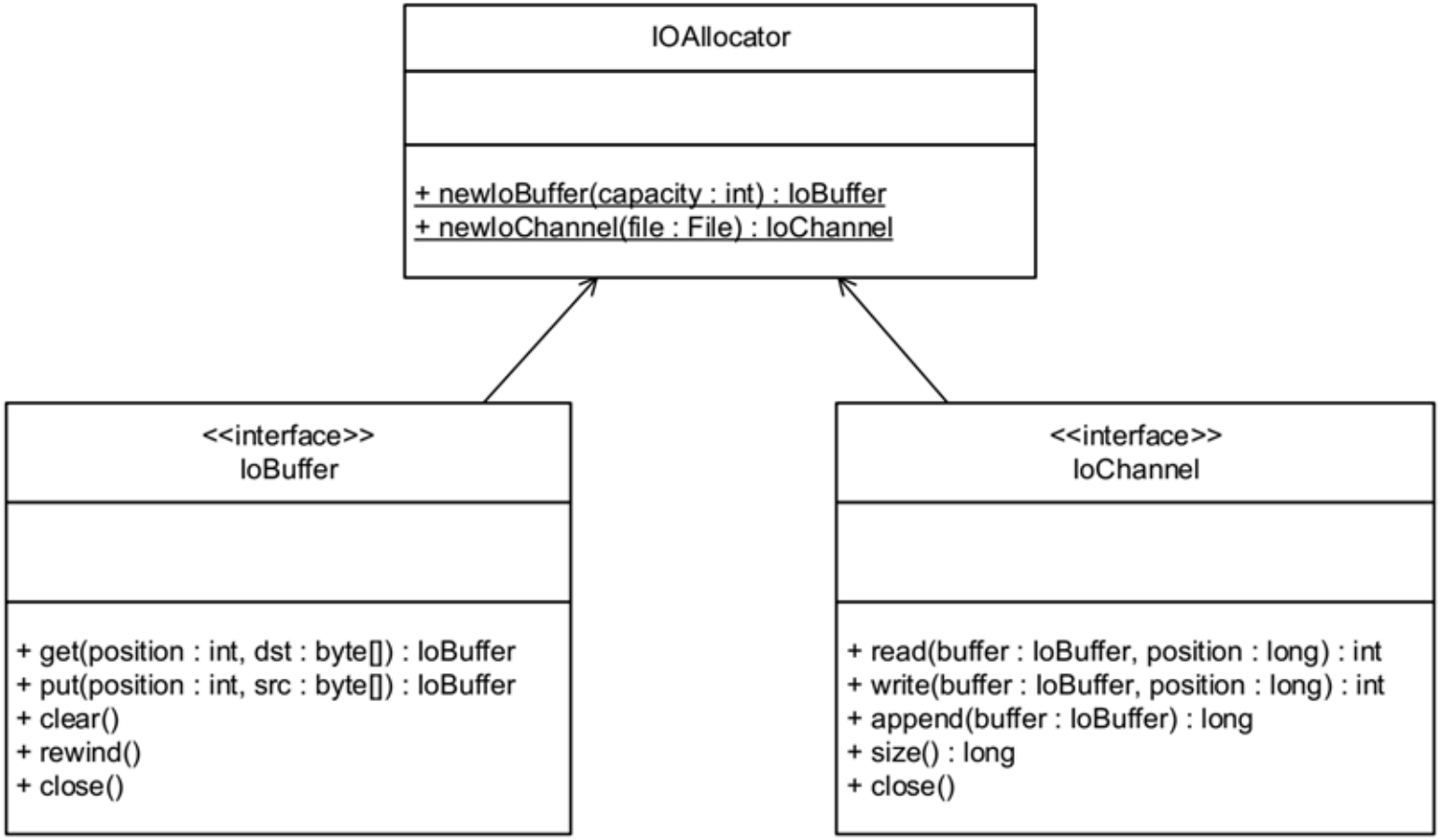
IOAllocator
+ newIoBuffer(capacity : int) : IoBuffer
+ newIoChannel(file : File) : IoChannel
<<interface>>
IoBuffer
+ get(position : int, dst : byte[]) : IoBuffer
+ put(position : int, src : byte[]) : IoBuffer
+ clear()
+ rewind()
+ close()
<<interface>>
IoChannel
+ read(buffer : IoBuffer, position : long) : int
+ write(buffer : IoBuffer, position : long) : int
+ append(buffer : IoBuffer) : long
+ size() : long
+ close()

Two Implementations

- Java NIO
  - Part of Java Standard Library
  - Provides high performance memory and file I/O

- Jaydio
  - A third-party library that provides finer controls over file I/O
  - Supports `O_DIRECT`
  - Only supported on Linux distributions

`IoChannel` in Java NIO

- Opens a file by creating a new `RandomAccessFile` instance and then obtain its file channel via `getChannel()`
- Files are opened in "rws" mode when using Java NIO
  - The "rw" means that the file is open for reading and writing
  - The "s" means that the OS should not delay disk I/O in order to optimize disk performance; instead, every *write* operation must be written immediately to the disk

`IoChannel` in Java NIO

```java
public JavaNioFileChannel(File file) throws IOException {
    @SuppressWarnings("resource")
    RandomAccessFile f = new RandomAccessFile(file, "rws");
    fileChannel = f.getChannel();
}
```

/db24-assignment-4/core-patch
/src/main/java/org/vanilladb/core/storage/file/io/javanio/JavaNioFileChannel.java

`IoBuffer` in Java NIO

- `IoBuffer` in Java NIO is implemented by wrapping `ByteBuffer`
- `ByteBuffer` has two factory methods: `allocate` and `allocateDirect`
  - `allocateDirect` tells JVM to use one of the OS's I/O buffers to hold the bytes
  - ***Not*** in Java programmable buffer, no garbage collection
  - Eliminates the redundancy of ***double buffering***

```
public JavaNioByteBuffer(int capacity) {
    byteBuffer = ByteBuffer.allocateDirect(capacity);
}
```

core-patch/src/main/java/org/vanilladb/core/storage/file/io/javanio/JavaNioByteBuffer.java

Double Buffering

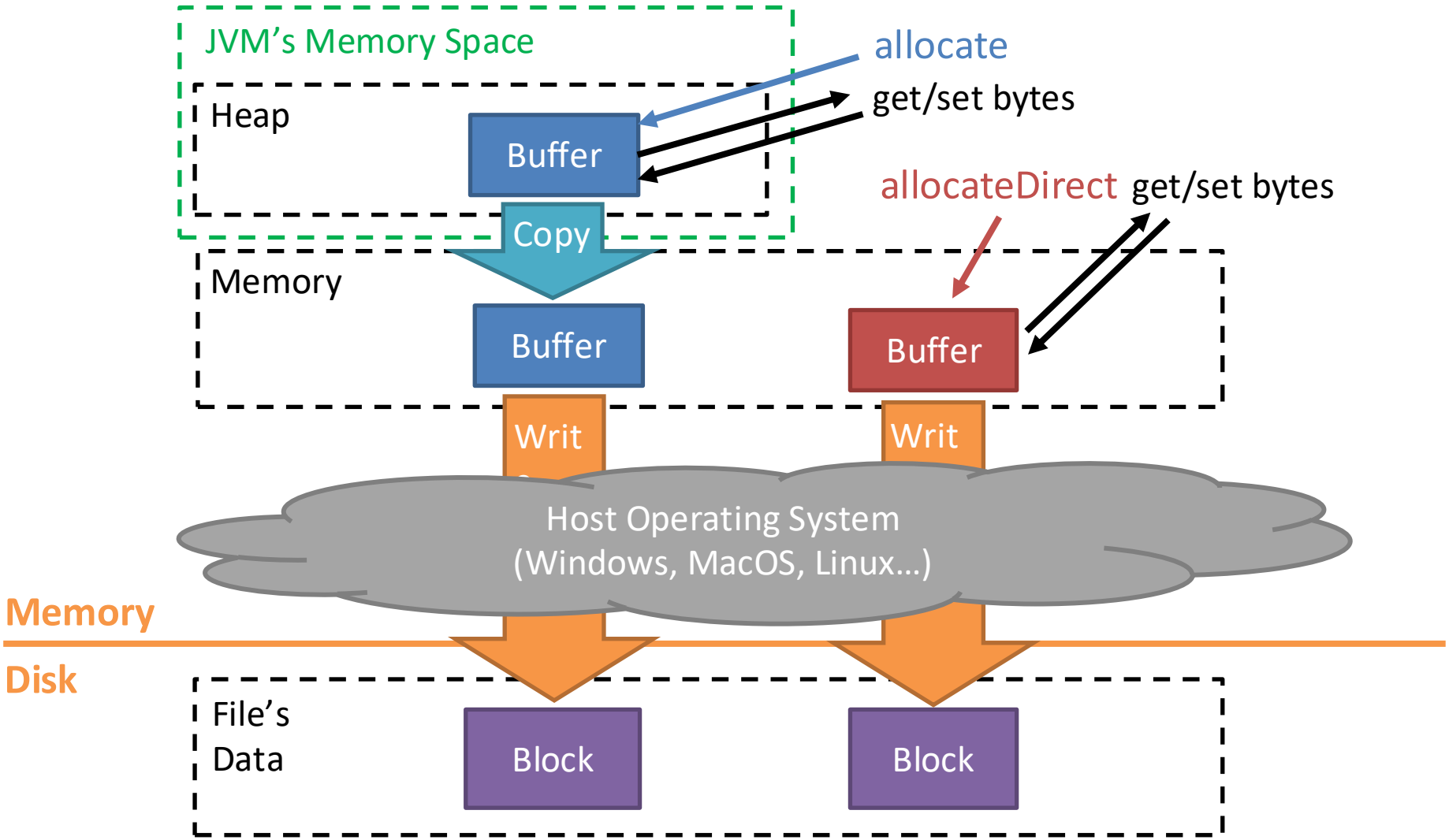

`IoChannel` in Jaydio

- Supports `O_DIRECT` option
  - This option forces the operating system to **directly send the written bytes to the file** without buffering.
- Opens a file by calling `DirectIoByteChannel.getChannel()`

```
public JaydioDirectIoChannel(File file) throws IOException {
    fileChannel = DirectIoByteChannel.getChannel(file, readOnly:false);
}
```

core-patch/src/main/java/org/vanilladb/core/storage/file/io/jaydio/JaydioDirectIoChannel.java

Double Buffering **in OS**

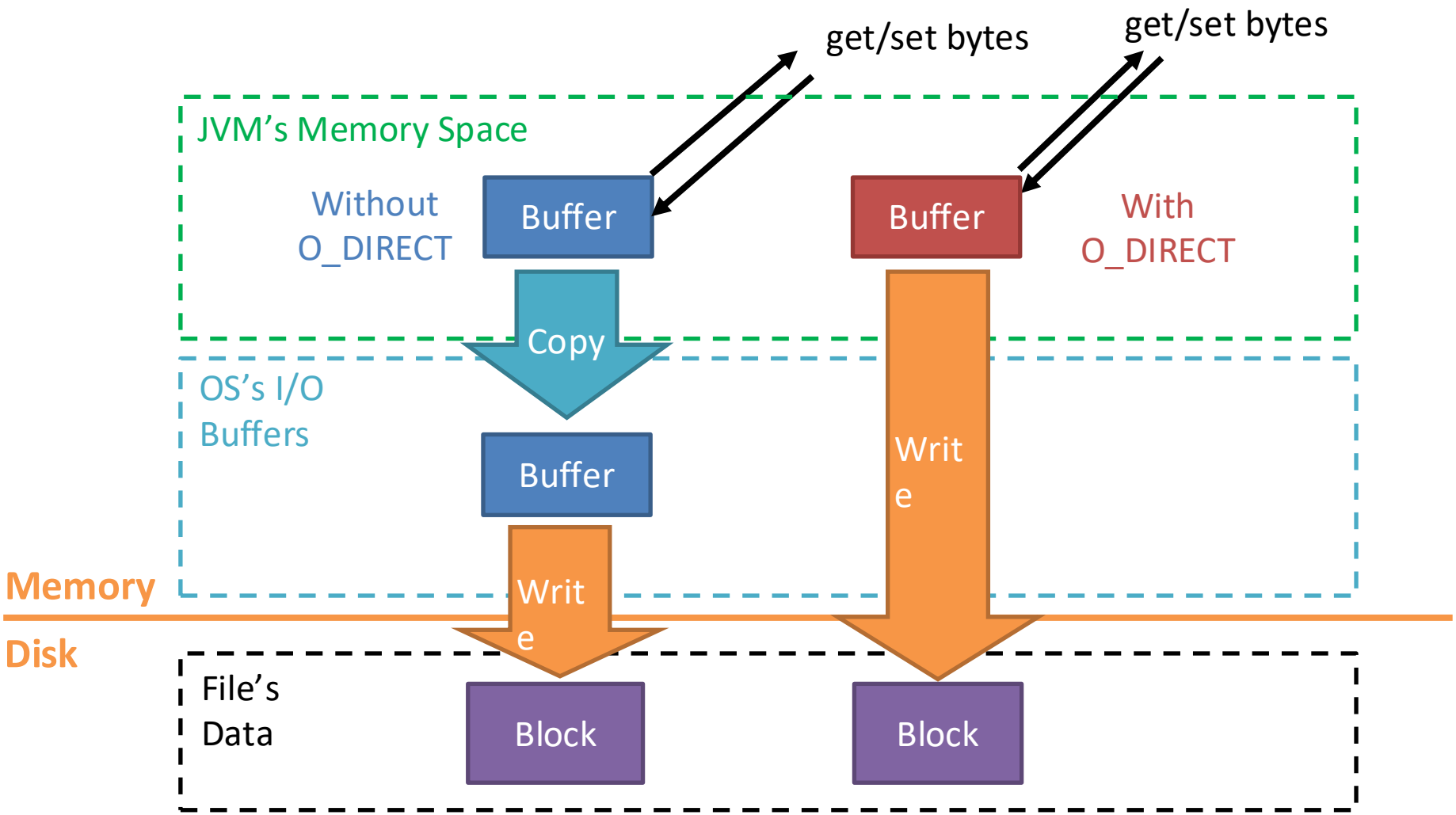

`IoBuffer` in Jaydio

- Jaydio's `AlignedDirectByteBuffer` ensures that buffer is allocated in JVM's direct memory.
  - The double buffering in JVM has been avoided

```
public JaydioDirectByteBuffer(int capacity) {
    byteBuffer = AlignedDirectByteBuffer
            .allocate(DirectIoLib.getLibForPath(FileMgr.DB_FILES_DIR), capacity);
}
```

core-patch/src/main/java/org/vanilladb/core/storage/file/io/jaydio/JaydioDirectByteBuffer.java