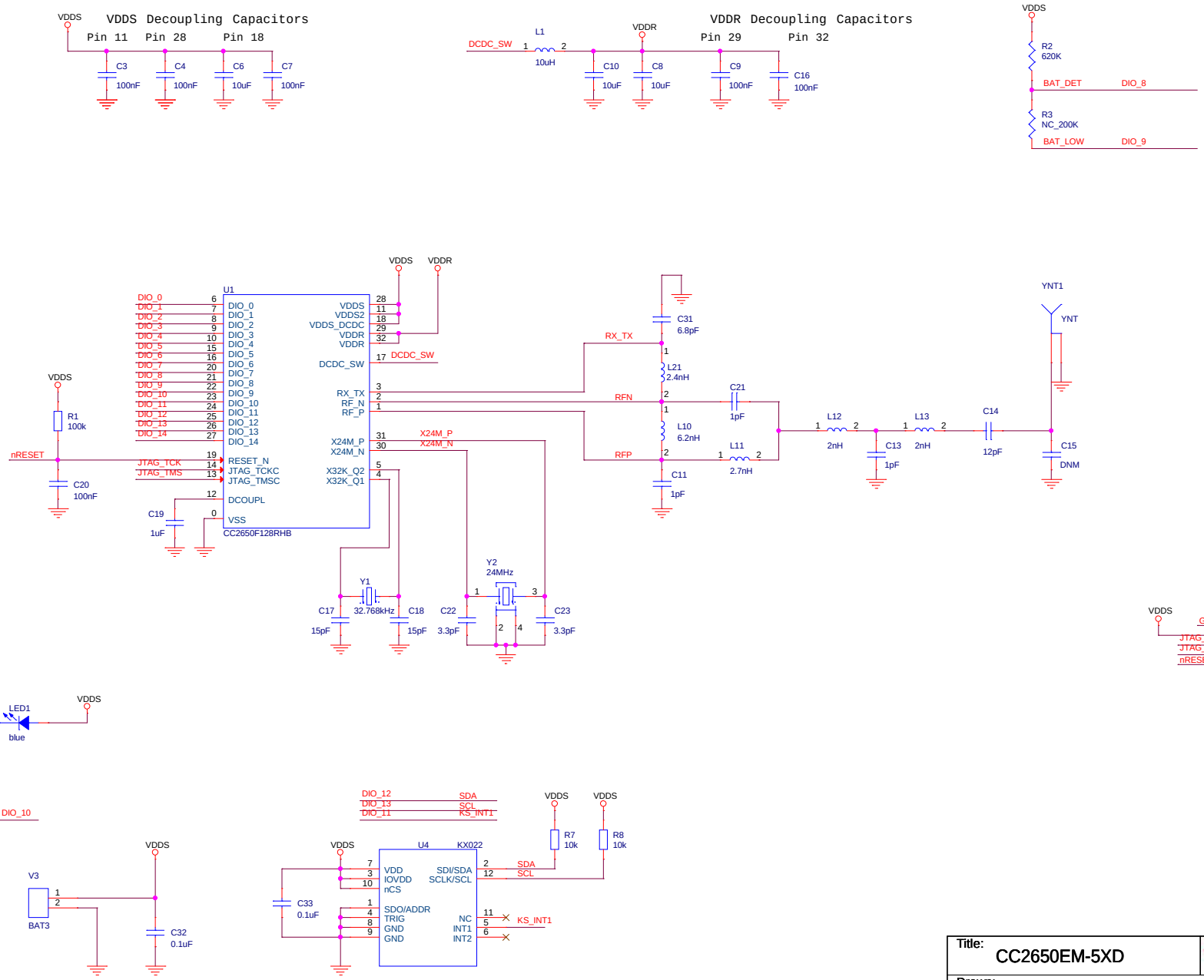

Title:	CC2650EM-5XD
Drawn:	FGK
Checked:	
Size: A3	Rev: 1.0.5
Sheet:	1 of 1
Date:	Monday, December 14, 2015