## Simulation setup

VAR
VAR1
Kv=50 kHz
Bits=1000
RF_Freq=2.44 GHz
VL=-1 V
VH=1 V
Sample_Rate=40 kHz
Samps_per_Sym=20
TStep=1/(Samps_per_Sym*Sample_Rate)
TStop=Bits/Sample_Rate
PA_Gain=20
Channel_Loss=-40*log(h/R) - 3.01
LNA_Gain=10 + 3.01
BB_Gain=40

VAR
VAR2
R=100
h=1

VAR
VAR3
Noise=1287

ENVELOPE
Envelope
Env1
Freq[1]=RF_Freq
Order[1]=2
Stop=TStop
Step=TStep

PARAMETER SWEEP
ParamSweep
Sweep1
SweepVar="R"
Start=40
Stop=800
Step=40

## Transmitter

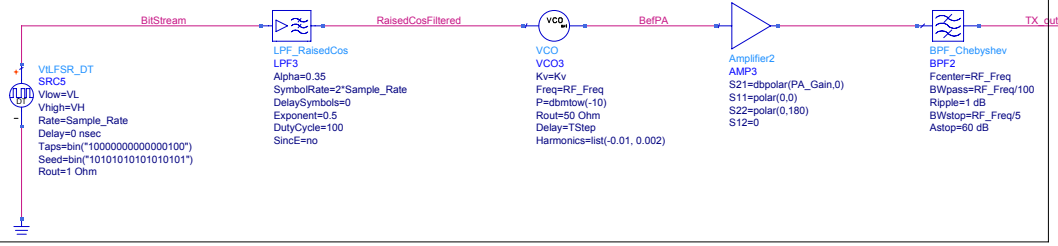


## Path losses + thermal noise

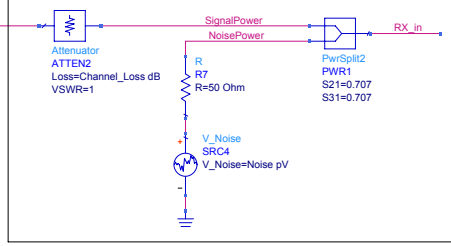


## Receiver

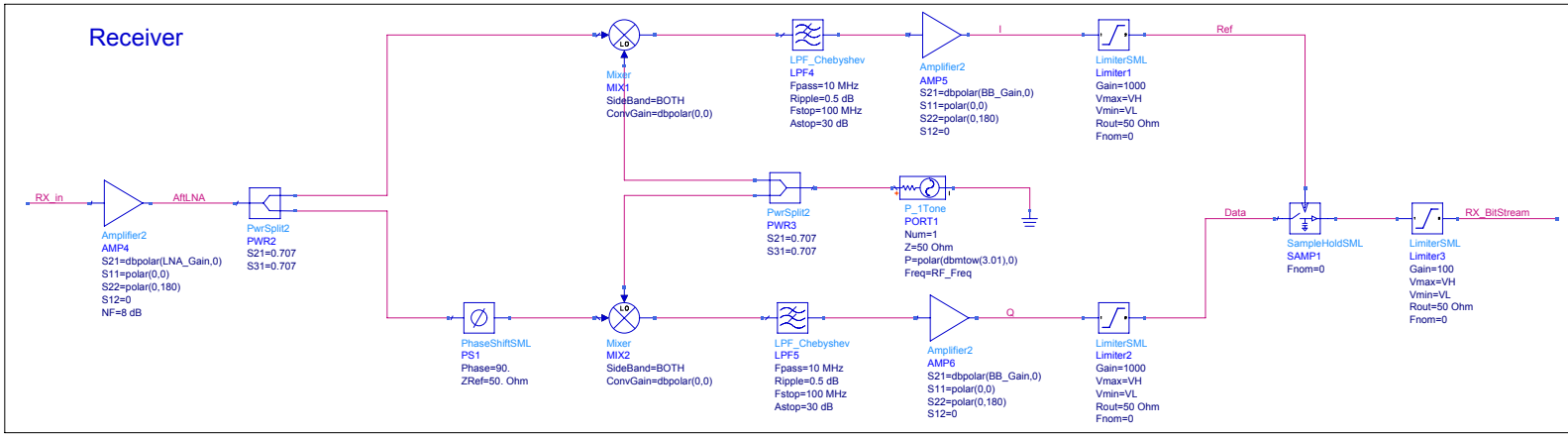

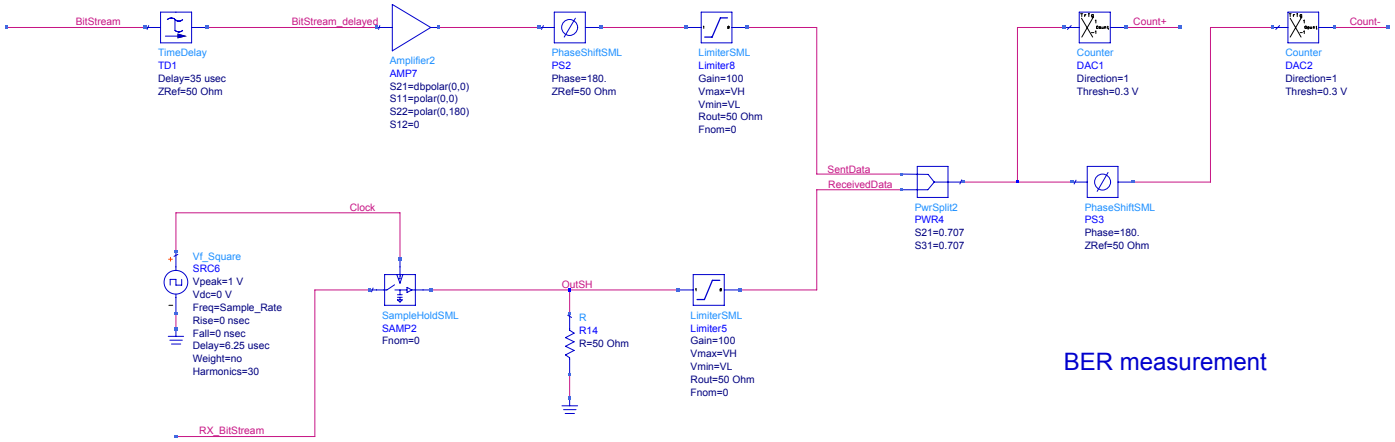
## BER measurement