DM-J4310-2EC V1.1 Gear Motor Instruction Manual V1.0

DAMIAO | Damiao Technology

Issue Date: 2023.11.16

Date	Version	Change Content
2023.11.16	V1.0	Initial version

Disclaimer

Thank you for purchasing the Damiao Technology DM-J4310-2EC V1.1 gear motor (hereinafter referred to as the "motor"). Before using this product, please carefully read and follow this document and all safety guidelines provided by Damiao Technology. Failure to do so may cause harm to you and those around you, or damage this product or other surrounding items. By using this product, you acknowledge that you have carefully read this document and understand, approve of, and accept all terms and content of this document and all related documents of this product. You undertake to use this product only for legitimate purposes and to assume full responsibility for the use of this product and any consequences that may arise. Damiao Technology shall not be liable for any damage, injury, or legal liability arising directly or indirectly from the use of this product.

"DAMIAO" is a trademark of Shenzhen Damiao Technology Co., Ltd. Product names, brands, etc. appearing in this document are trademarks of their respective companies. This product and manual are copyrighted by Shenzhen Damiao Technology Co., Ltd. No part of this document may be reproduced or reprinted in any form without permission. The final interpretation right of this document and all related documents of this product belongs to Shenzhen Damiao Technology Co., Ltd. Updates may be made without prior notice.

Notes

1. Please use the motor strictly in accordance with the specified working environment and the maximum allowable temperature range of the winding, otherwise permanent and irreversible damage to the product will be caused.
2. Avoid foreign objects from entering the rotor interior, otherwise the rotor will run abnormally.
3. Check whether all components are in good condition before use. If any components are missing, aged, or damaged, stop using immediately.
4. Ensure correct wiring and proper and stable installation of the motor.
5. Do not touch the electronic rotor part during use to avoid accidents. When the motor outputs high torque, it will generate heat. Please pay attention to avoid burns.
6. Users are not allowed to disassemble the motor privately, otherwise the control accuracy of the motor will be affected, and even the motor will run abnormally.

Motor Features

1. Dual encoders, absolute position of the output shaft in a single turn, no fear of losing the absolute position of the output shaft due to power failure.
2. Integrated design of motor and driver, compact structure and high integration.
3. Support for upper computer visual debugging and firmware upgrading.
4. Can feedback motor speed, position, torque, motor temperature and other information through CAN bus.

5. With dual temperature protection function.
6. Support trapezoidal acceleration and deceleration in position mode.

Item List

1. Motor (with driver) × 1
2. Power supply (with CAN communication terminal) connection cable: XT30(2+2)-F plug connection cable × 1
3. Debugging serial port signal cable: GH1.25 connection cable - 3pin × 1

Interface and Wiring Sequence Instructions

Specific Name - Serial Number	Interface Label	Description
Power Interface with CAN Communication Terminal - 1	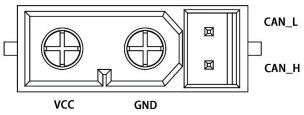	1. Connect the power supply through the XT30(2+2)-F plug power connection cable. The rated voltage is 24V to supply power to the motor. 2. Connect to external control equipment through CAN communication terminals to receive CAN control commands and feedback motor status information. 3. The motor has two power interfaces, either of which can be used alone or multiple motors can be connected in series for convenient cabling.
Power Interface with CAN Communication Terminal - 2		
Debugging Serial Port - 3	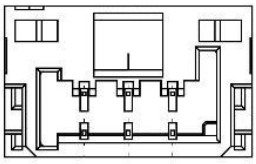	Connect to a PC through a GH1.25 connection cable - 3pin using a USB-to-CAN debugging tool (or a universal USB-to-serial port module) to set parameters and upgrade firmware for the motor through the Damiao Technology debugging assistant.

Motor Dimensions and Installation

Please refer to the motor mounting hole dimensions and positions to install the motor on the corresponding equipment.

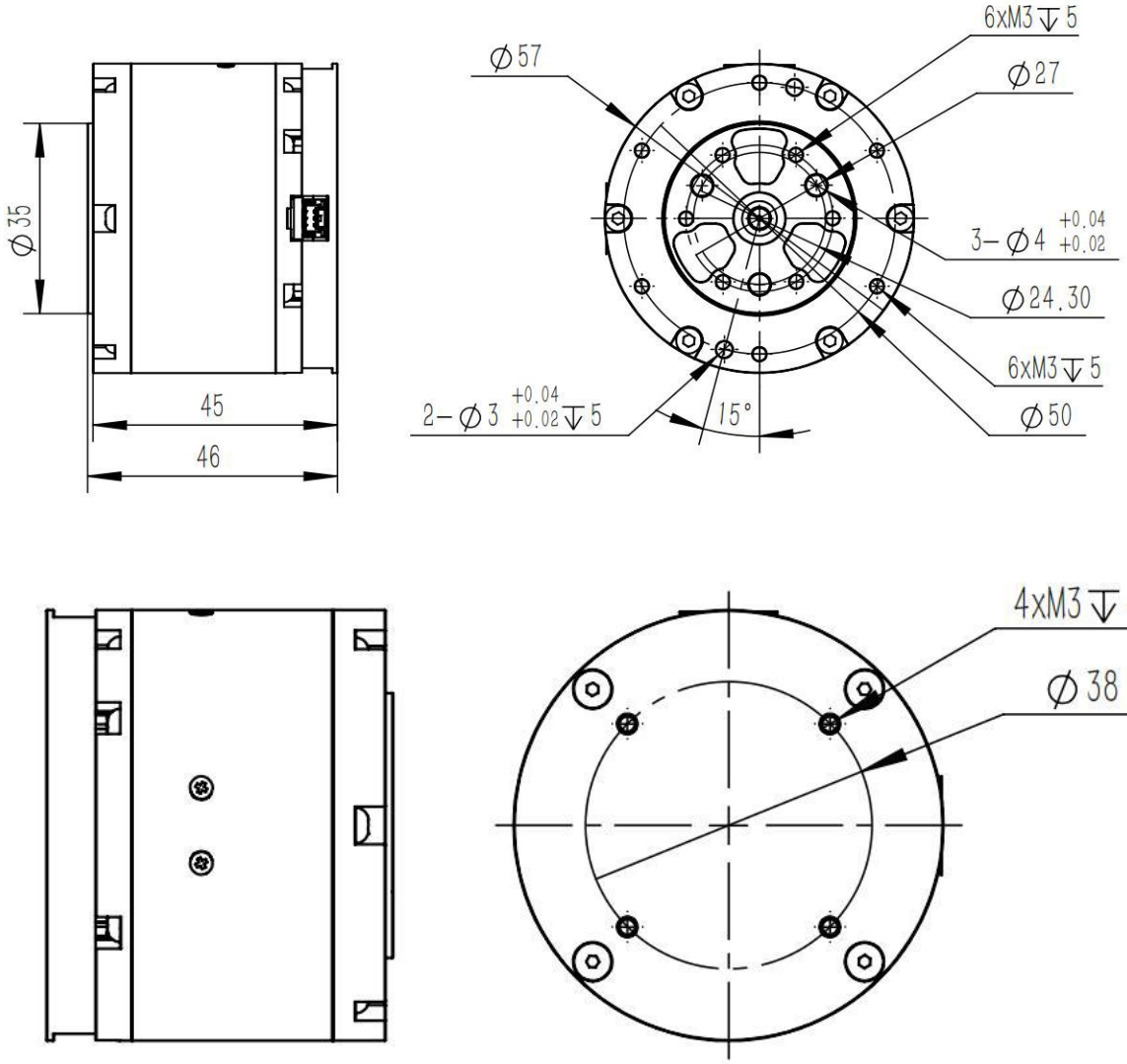

Indicator Light Status

Status	Indicator Light	Description
Normal Status	Green light always on	Enable mode, normal working status
	Red light always on	Disable mode
Abnormal Status	Red light flashing	Indicates a fault, with the corresponding fault types being: 8 -- Overvoltage; 9 -- Undervoltage; A -- Overcurrent; B -- MOS overtemperature; C -- Motor coil overtemperature; D -- Communication loss; E -- Overload; The fault type can be viewed through the feedback frame or the display interface of the Damiao Technology debugging assistant.

Working Modes

MIT Mode

The MIT mode is designed to be compatible with the original MIT mode, enabling seamless switching while allowing flexible setting of the control range (P_MAX, V_MAX, T_MAX). The electronic speed controller converts the received CAN data into control variables for calculation to obtain the torque value as the current reference of the current loop, and the current loop finally reaches the given torque current according to its adjustment law. Its control schematic diagram is as follows:

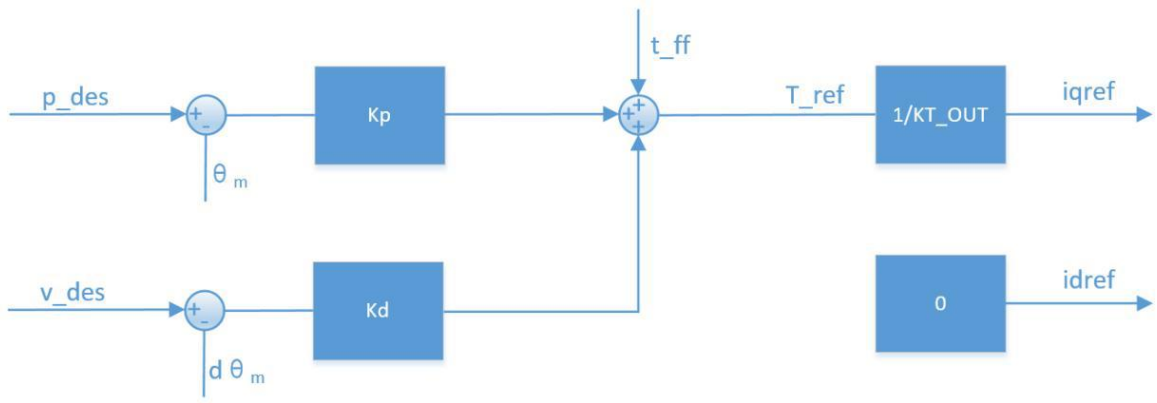

Multiple control modes can be derived from the MIT mode. For example, when kp = 0 and kd is not 0, giving v_des can realize uniform speed rotation; when kp = 0 and Kd = 0 , giving t_ff can realize given torque output.

Note: When controlling the position, kd cannot be set to 0, otherwise the motor will oscillate or even lose control.

Position-Speed Mode

The position cascade mode is a mode using three-loop series control. The position loop is the outermost loop, whose output is used as the given value of the speed loop, and the output of the speed loop is used as the given value of the inner current loop to control the actual current output. Its control schematic diagram is as follows:

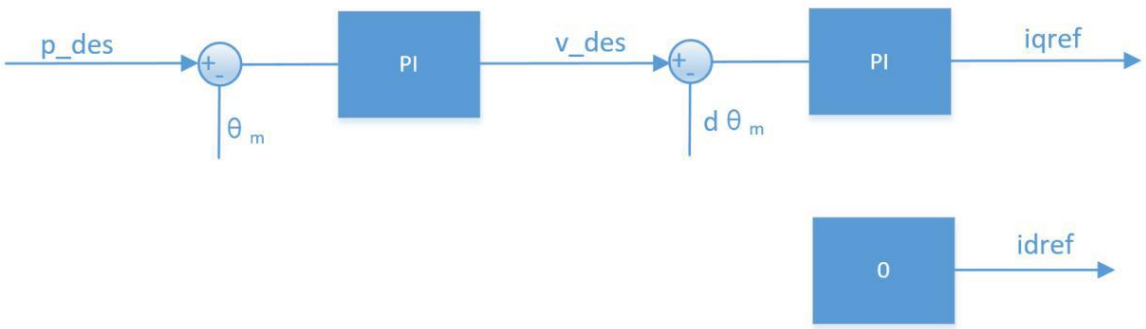

p_des is the target position for control, and v_des is used to limit the maximum absolute speed during movement.

If the control parameters recommended by the debugging assistant are used in the position cascade mode, good control accuracy can be achieved, and the control process is relatively smooth, but the response time is relatively long. In addition to v_des , the relevant parameters that can be configured also include acceleration/deceleration. If additional oscillations occur during the control process, the acceleration/deceleration can be increased.

Note: The units of p_des and v_des are rad and rad/s respectively, and the data type is float. The damping factor must be set to a non-zero positive number, and the notes of the speed mode can be referred to.

Speed Mode

The speed mode can make the motor run stably at the set speed, and its control schematic diagram is as follows:

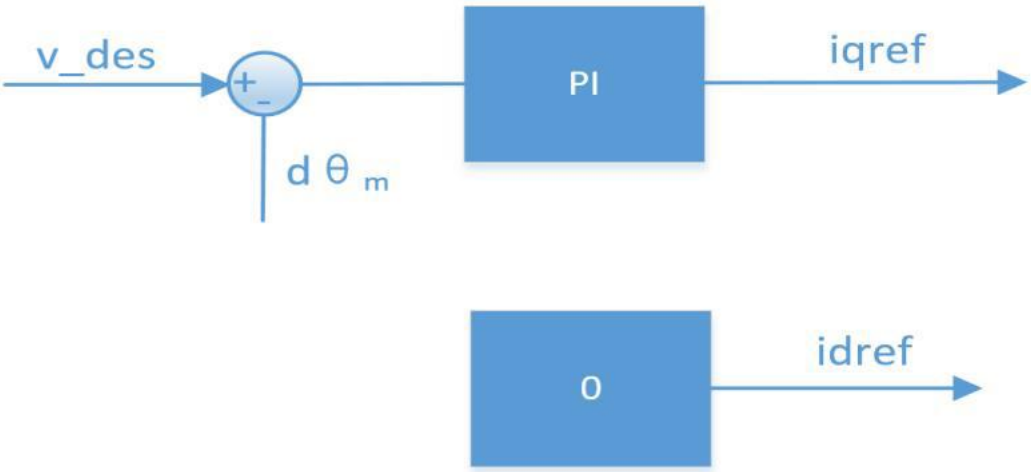

Note: The unit of v_des is rad/s, and the data type is float. If you need to use the debugging assistant to automatically calculate parameters, you need to set the damping factor to a non-zero positive number. Usually, the value is between 2.0 and 10.0. Too small a damping factor will cause speed oscillation and large overshoot, while too large a damping factor will result in a longer rise time. The recommended setting value is 4.0.

Usage

Control uses the CAN standard frame format with a fixed baud rate of 1 Mbps, and can be divided into receive frames and feedback frames according to functions. The receive frame is the received control data used to realize command control of the motor; the feedback frame is the motor's status data sent to the upper controller. According to different modes selected by the motor, the frame format definition and frame ID of the receive frame are different, but the feedback frames under various modes are the same.

Feedback Frame

The feedback frame ID is set by the debugging assistant (Master ID), with a default of 0, mainly feeding back the motor's position, speed, and torque information. Its frame format definition is as follows:

Feedback Message	D[0]	D[1]	D[2]	D[3]	D[4]	D[5]	D[6]	D[7]
MST_ID	ID|ERR << 4	POS[15:8]	POS[7:0]	VEL[11:4]	VEL[3:0]|T[11:8]	T[7:0]	T_MOS	T_Rotor

Where:

- ID represents the controller ID, taking the lower 8 bits of CAN_ID.
- ERR represents the fault, with the corresponding fault types being:
  - 8 -- Overvoltage;
  - 9 -- Undervoltage;
  - A -- Overcurrent;
  - B -- MOS overtemperature;
  - C -- Motor coil overtemperature;
  - D -- Communication loss;
  - E -- Overload;
- POS represents the motor's position information.
- VEL represents the motor's speed information.
- T represents the motor's torque information.
- T_MOS represents the average temperature of the MOS on the driver, in ℃.
- T_Rotor represents the average temperature of the motor's internal coil, in ℃.

Position, speed, and torque use a linear mapping relationship to convert floating-point data into signed fixed-point data, where position uses 16-bit data, and speed and torque both use 12-bit data.

Control Frame in MIT Mode

Control Message	D[0]	D[1]	D[2]	D[3]	D[4]	D[5]	D[6]	D[7]
ID	p_des [15:8]	p_des [7:0]	v_des [11:4]	v_des[3:0] | Kp[11:8]	Kp[7:0]	Kd[11:4]	Kd[3:0] | t_ff[11:8]	t_ff[7:0]

Frame ID is equal to the set CAN ID value.

- P_des: Position given value.
- V_des: Speed given value.
- Kp: Position proportional coefficient.
- Kd: Position differential coefficient.
- T_ff: Torque given value.

Each parameter conforms to the mapping relationship in the previous section, where the ranges of p_des, v_des, and t_ff can be set by the debugging assistant. The range of Kp is [0, 500], and the range of Kd is [0, 5].

A standard CAN data frame has only 8 bytes. The MIT control command format combines five parameters: Position, Velocity, Kp, Kd, and Torque into 8 bytes by bit. Among them, Position occupies 2 bytes (16 bits), and Velocity, Kp, and Kd each occupy 12 bits.

Control Frame in Position-Speed Mode

Control Message	D[0]	D[1]	D[2]	D[3]	D[4]	D[5]	D[6]	D[7]
0x100 + ID	p_des				v_des			

Frame ID is the set CAN ID value plus an offset of 0x100.

- P_des: Position given value, floating-point type, with lower bits first and higher bits later.
- V_des: Speed given value, floating-point type, with lower bits first and higher bits later.

Here, the CAN ID for sending commands is 0x100 + ID. The speed given value is the highest speed under trapezoidal acceleration and deceleration operation, that is, the speed value in the uniform speed segment.

Control Frame in Speed Mode

Control Message	D[0]	D[1]	D[2]	D[3]
0x200 + ID	v_des			

- Frame ID is the set CAN ID value plus an offset of 0x200.
- V_des: Speed given value, floating-point type, with lower bits first and higher bits later.

Here, the CAN ID for sending commands is 0x200 + ID.

Using Damiao Technology Debugging Assistant

Use the Damiao Technology USB-to-CAN debugging tool to connect the computer and the motor, and set parameters and upgrade firmware for the motor through the Damiao Technology assistant.

Connect the motor's debugging serial port to the PC through a GH1.25 connection cable - 3pin, and connect the CAN communication terminal in the motor's power interface to the USB-to-CAN debugging tool through an XT30(2+2)-F plug connection cable. Then, set parameters and upgrade firmware for the motor through the Damiao Technology debugging assistant.

After the motor's serial port, CAN port, and power interface are connected, open the Damiao Technology debugging assistant on the computer, select the corresponding serial port device, and open the serial port. Then, power on the motor, and the serial port will print information, with "Control Mode" indicating the current driving mode.

For detailed debugging procedures, refer to the *Debugging Assistant Instruction Manual (Damiao Drive Control Protocol) V1.3.pdf*.Download link:
http://www.dmbot.cn/forum.php?mod=viewthread&tid=364&extra=page%3D1

Motor Parameters

Performance curve measured at a constant speed of 120 rpm and room temperature of 25℃:

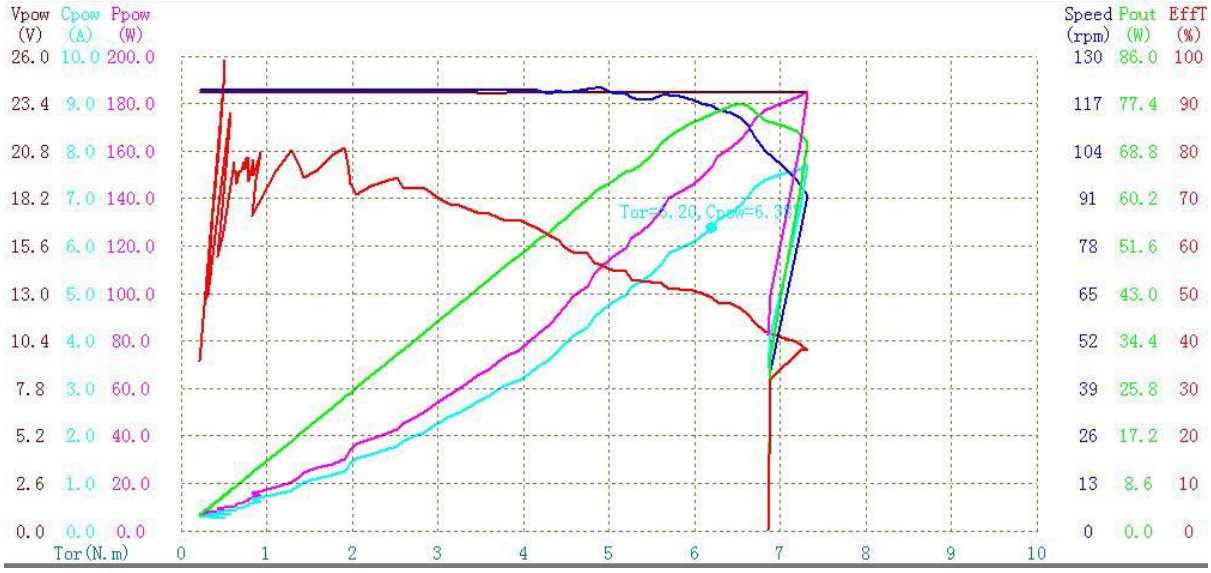

Characteristic Parameters

Category	Parameter	Value
Motor Parameters	Rated Voltage	24V
	Rated Current	2.5A
	Peak Current	7.5A
	Rated Torque	3NM
	Peak Torque	7NM
	Rated Speed	120rpm
	No-Load Maximum Speed	200rpm
Motor Characteristics	Gear Ratio	10:1
	Number of Pole Pairs	14
	Phase Inductance	340uH
	Phase Resistance	650mΩ
Mechanical Dimensions & Weight	Outer Diameter	56mm
	Height	46mm
	Motor Weight	Approximately 300g
Encoders	Encoder Resolution	14 bits
	Number of Encoders	2
	Encoder Type	Magnetic (Single-turn)
Communication	Control Interface	CAN@1Mbps
	Parameter Adjustment Interface	UART@921600bps
Control & Protection	Control Modes	MIT Mode, Speed Mode, Position Mode
	Driver Overtemperature Protection	Protection Temperature: 120°C, the motor will exit "Enable Mode"

Category	Parameter	Value
		when overheated
	Motor Overtemperature Protection	Set according to usage requirements, recommended not to exceed 100°C; the motor will exit "Enable Mode" when overheated
	Motor Overvoltage Protection	Set according to usage requirements, recommended not to exceed 32V; the motor will exit "Enable Mode" under overvoltage
	Communication Loss Protection	Automatically exit "Enable Mode" if no CAN commands are received within the set period
	Motor Overcurrent Protection	Set according to usage requirements, recommended not to exceed 9.8A; the motor will exit "Enable Mode" under overcurrent
	Motor Undervoltage Protection	Exit "Enable Mode" if the power voltage is lower than the set value; recommended power voltage not lower than 15V