DAMIAO

DM-J4340-2EC motor

Disclaimer

Thank you for purchasing Damiao Technology TM DAMIAO TM DM -J4340-2 EC Gear motor (hereinafter referred to as " Motor"). Before using this product, please carefully read and follow all safety instructions provided in this document and Damiao Technology, otherwise it may cause harm to you and Cause harm to people around you, damage this product or other surrounding objects. Once you use this product, it is deemed that you have carefully read By submitting this document, you understand, acknowledge and accept all the terms and contents of this document and all related documents of this product. Use this product for legitimate purposes. You promise to take full responsibility for the use of this product and any possible consequences. We are not responsible for any damage, injury or legal liability caused directly or indirectly by the use of this product.

DAMIAO is a trademark of Shenzhen Damiao Technology Co., Ltd. The product names and brands appearing in this article are This product and manual are copyrighted by Shenzhen Damiao Technology Co., Ltd. Without permission, any use of The final right of interpretation of this document and all related documents of this product belongs to Shenzhen Damiao Technology Co., Ltd. Yes. This information is subject to change without prior notice.

Precautions

1. Please use the motor strictly in accordance with the specified working environment and the maximum allowable temperature range of the winding, otherwise it will cause damage to the product. Permanent irreversible damage.
2. Prevent debris from entering the rotor, otherwise it will cause abnormal operation of the rotor.
3. Please check that all parts are intact before use. If any parts are missing, aged, or damaged, please stop using.
4. Ensure that the wiring is correct and the motor is installed correctly and securely.
5. Do not touch the electronic rotor part during use to avoid accidents. When the motor outputs high torque, it will get hot. Please be careful to avoid burns.
6. Users are not allowed to disassemble the motor without permission, otherwise it will affect the control accuracy of the motor and even cause abnormal operation of the motor.

Motor Features

1. Dual encoders, output shaft single-turn absolute position, no fear of power failure output shaft absolute position loss.
2. The motor and driver are integrated into one design, with compact structure and high integration.
3. Supports host computer visual debugging and firmware upgrade.
4. Available through CAN The bus feeds back information such as motor speed, position, torque, and motor temperature.
5. With dual temperature protection function.

6. Trapezoidal acceleration and deceleration are supported in position mode.

Item List

1 , Motor (including drive) × 1
2 , power supply (including CAN Communication terminal) connection line: XT 30 (2 + 2) -F plug single-ended connection line (100 mm) × 1
3, Debug serial port signal line: GH 1.25 cable - 3 pin (different surface , 300mm) × 1

Interface and line sequence description

Specific name - serial number	Interface annotation	illustrate
Power interface -1 (Including CAN communication terminal)	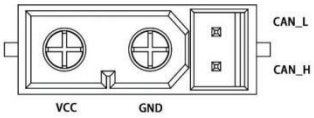	1. Pass Power connection for XT 30(2+2)-F plug Wiring connected to power supply, rated voltage is 24V , Supply power to the motor. 2 ,pass CAN Communication terminal connected to external control Control equipment, can receive CAN Control command, reverse Feeder status information. 3 ,The motor has two power supply interfaces. The ports can be connected individually or in series. Use, easy to route.
Power interface -2 (Including CAN communication terminal)		

Debug serial port -3	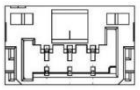	pass GH 1.25 cable - 3 pin , using USB to CAN Debugging tools (or using general USB to serial port module) connected to PC , through Damiao The technology debugging assistant sets the motor parameters configuration, and firmware upgrades, etc.

Motor size and installation

Please refer to the motor mounting hole size and position to install the motor to the corresponding equipment.

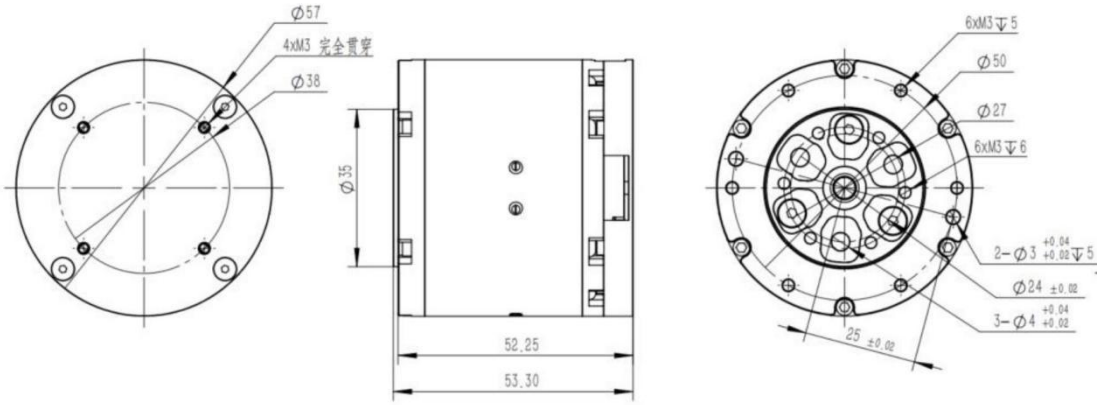

Indicator status

Normal state	Green light is always on	ERR Position 1, indicating enable mode , normal working state
	Red light is on	ERR Bit 0 indicates disabled mode
Abnormal status	Flashing red light	Indicates a fault. The corresponding fault types are: 8 — overpressure; 9 - Undervoltage; A ——overcurrent; B —— MOS Overheating; C ——Motor coil overtemperature; D — Loss of communication; E — Overload; It can be displayed through feedback frames or through the Damiao Technology debugging

		assistant interface. Check what kind of failure occurred.

Working Mode

❖ MIT model

MIT The mode is to be compatible with the original MIT Mode design, can achieve seamless switching while being able to flexibly set Fixed control range (P_MAX , V_MAX , T_MAX), the ESC will receive the CAN Data is converted into control variables The torque value obtained by calculation is used as the current given by the current loop, and the current loop eventually reaches the given torque current according to its adjustment law. The control schematic diagram is as follows:

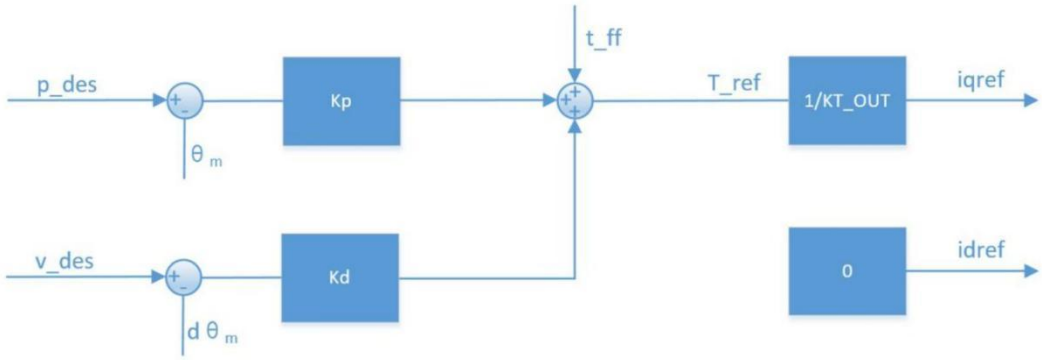

according to MIT The mode can derive multiple control modes, such as kp =0, kd Not for 0 When given v_des To achieve uniform Speed rotation ; kp = 0, kd = 0 , given t_ff The given torque output can be achieved .

Note: When controlling the position, kd Cannot be given 0 Otherwise, the motor will vibrate or even lose control.

❖ Position speed mode

The position cascade mode is a three-loop series control mode, with the position loop as the outermost loop and its output as the input to the speed loop. The output of the speed loop is used as the given value of the inner current loop to control the actual current output. The control schematic diagram is shown in Below:

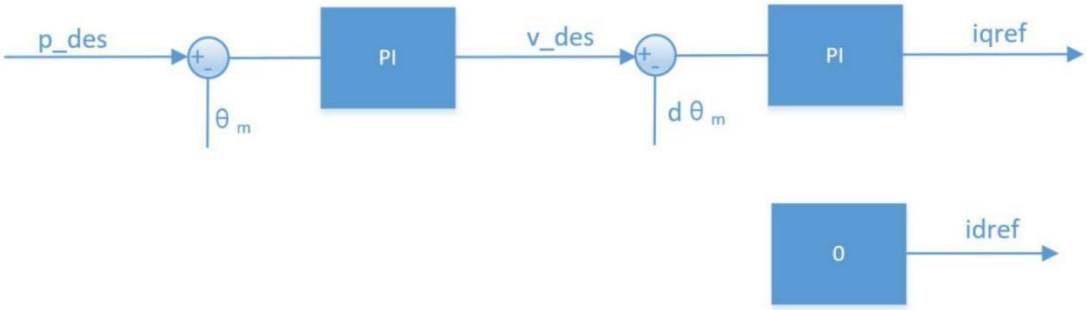

p_des is the target position of the control, v_des It is used to limit the maximum absolute speed value during the movement.
If the position cascade mode is controlled using the control parameters recommended by the debugging assistant, better control accuracy can be achieved. The process is relatively smooth, but the response time is relatively long.
v_des In addition, there is also acceleration / deceleration setting If additional oscillation occurs during control, the acceleration / deceleration can be increased.
Note : p_des , v_ des The units are rad and rad /s , data type is float , The damping factor must be set to Non- zero For positive numbers, refer to the precautions for speed mode.

❖ Speed Mode

The speed mode allows the motor to run stably at the set speed. The control diagram is as follows:

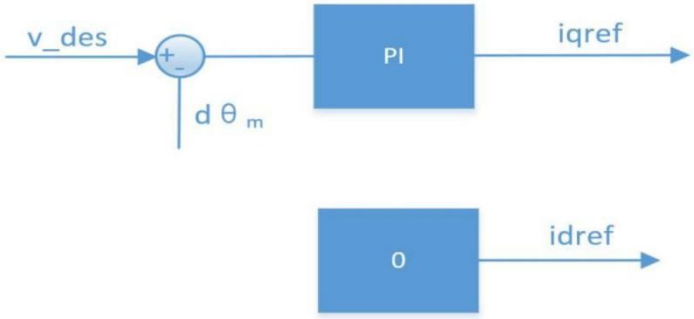

Note: v_des The unit is rad/s , data type is float If you want to use the debugging assistant to automatically calculate the parameters , you need Set the damping factor to non 0 Positive number, usually between 2.0 and 10.0 Too small a damping factor will cause speed fluctuations As well as a larger overshoot, an excessively large damping factor will result in a longer rise time. The recommended setting value is 4.0 .

use

Control using CAN Standard frame format, fixed baud rate 1 Mbps , can be divided into receiving frame and feedback frame according to function, The receiving frame is the received control data, which is used to realize the command control of the motor; the feedback frame is the motor sending power to the upper controller. The status data of the motor. According to the different modes selected by the motor, the frame format definition and frame ID Different, but each The feedback frames in both modes are the same.

❖ Feedback frame

Feedback frame ID Set by the Debug Assistant (Master ID), default is 0 , mainly feedback the position, speed and torque of the motor Information, its frame format is defined as:

Feedback message	D[0]	D[1]	D[2]	D[3]	D[4]	D[5]	D[6]	D[7]

MST_ID	ID|ERR<<4	POS[15:8]	POS[7:0]	VEL[11:4]	VEL[3:0]|T[11:8]	T[7:0]	T_MOS	T_Rotor

ID Indicates the controller ID ,Pick CAN_ID Low 8 -bit ERR Indicates the status, the corresponding status type is:
0 — incapacitation;
1 — Enable;
8 — overpressure;
9 - Undervoltage;
A ——overcurrent;
B —— MOS Overheating;
C ——Motor coil overtemperature;
D — Loss of communication;
E — Overload;
POS Indicates the position information of the motor
VEL Indicates the speed information of the motor
T represents the torque information of the motor
T_MOS Indicates drive MOS Average temperature, in ° C
T_ Rotor Indicates the average temperature of the motor internal coil, unit ℃
Position, speed and torque use linear mapping to convert floating point data into signed fixed point data. Use 16 -bit data, both speed and torque use 12 digits.

❖ Control frame in MIT mode

Control message	D[0]	D[1]	D[2]	D[3]	D[4]	D[5]	D[6]	D[7]
ID	p_des [15:8]	p_des [7:0]	v_des [11:4]	v_des[3:0]| Kp[11:8]	Kp [7:0]	Kd [11:4]	Kd[3:0]| t_ff[11:8]	t_ff[7:0]

frame ID Equal to the set CAN ID value
P_des : Position given
V_des : Speed reference
Kp : Position proportional coefficient
Kd : Position differential coefficient
T_ff : Torque reference value
Each parameter conforms to the mapping relationship in the previous section, where p_ des ,v_ des ,t_ ff The range can be set by the debugging assistant. Kp The range is [0,500] , Kd The range is [0,5] .
standard CAN One frame of data has only 8 bytes, MIT The control command format will be Position , Velocity , Kp , Kd , Torque The five parameters are combined bit by bit in 8 bytes. Among them: Position Occupancy 2 bytes 16 -bit, Velocity Occupancy 12 -bit, Kp Occupancy 12th place, Kd Occupancy 12 digits.

❖ Control frame in position speed mode

Control message	D[0]	D[1]	D[2]	D[3]	D[4]	D[5]	D[6]	D[7]
0x100+ID	p_des				v_des			

frame ID For the setting CAN ID Value plus 0x100 Offset
P_des : Position given, floating point type, low bit first, high bit last
V_des : Speed reference, floating point type, low digit first, high digit last

Send command here CAN ID yes 0x100+ ID . The speed setting is the highest speed under trapezoidal acceleration operation, that is The speed value of the uniform speed segment.

❖ Control frame in speed mode

Control message	D[0]	D[1]	D[2]	D[3]
0x200+ID	v_des			

frame ID For the setting CAN ID Value plus 0x200 Offset
V_des : Speed reference, floating point type, low digit first, high digit last
Send command here CAN ID yes 0x200+ ID .

Using Damiao Technology Debugging Assistant

Using Damiao Technology USB change CAN Debugging tool, connect the computer and motor, and debug the motor through the Damiao Technology Assistant Perform parameter settings and firmware upgrades.
Motor debugging serial port through GH 1.25 Cable -3 pin connect PC , Motor power interface CAN Communication terminal through XT 30(2+2)-F plug cable connection USB change CAN Debugging tool, use Damiao Technology debugging assistant to set motor parameters Settings, firmware upgrades, etc.
Motor serial port, CAN After the port and power interface are connected, open the Damiao Technology debugging assistant on the computer and select the corresponding serial port. Then power the motor and the serial port will print information . Mode Indicates the current drive mode.

For detailed debugging process, please refer to: Debugging Assistant User Manual (Damiao Drive Control Protocol) V1.4.pd f

characteristic parameters

Please use the motor reasonably according to the following parameters.

type	characteristic parameters	DM-J4340-2EC (24V)	DM-J4340-2EC (48V)
Motor parameters	Rated voltage	24V	48V
	Rated current	2.5A	2.5A
	Peak current	8A	8A
	Rated torque	9NM	9NM
	Peak torque	27NM	27NM
	Rated speed	36rpm	36rpm
	Maximum no-load speed	52rpm	100rpm
Motor characteristic values	reduction ratio	40: 1	40: 1
	Pole pairs	14	14
	Phase inductance	317uH	317uH

	Phase resistance	760mΩ	760mΩ
Structure and weight	outer diameter	57mm	57mm
	high	53.3mm	53.3mm
	Motor weight	about 362g	about 362g
encoder	Encoder bit number	14 Bit	14 Bit
	Number of encoders	2	2
	Encoder type	Magnetic encoding (single turn)	Magnetic encoding (single turn)
communication	Control interface	CAN@1Mbps	
	Parameter adjustment interface	UART@921600bps	
Control and protection	Control Mode	MIT model	
		Speed Mode	
		Position Mode	
	Protect	Drive over-temperature protection, protection temperature: 120℃ , Over temperature motor will exit Enable Mode	
		Motor overtemperature protection , set according to usage requirements , it is recommended not to exceed 100℃ , Over temperature motor will exit "enable mode"	
		Motor overvoltage protection, according to the use Requirements Setting , it is recommended not to exceed 32V, overvoltage will exit the "enable model"	Motor overvoltage protection, according to the use Requirements Setting , it is recommended not to exceed 52V, overvoltage will exit the "enable model"
		Communication loss protection, no communication is received within the set period CAN The command will automatically Exit "Enable Mode"	
		Motor overcurrent protection , set according to usage requirements , it is recommended not to exceed 9.8A, overcurrent will exit "enable mode"	
		Motor undervoltage protection, if the power If the pressure is lower than the set value, exit "Enable Mode", it is recommended to power Voltage not less than 15V	Motor undervoltage protection, if the power Pressure lower than set value , then exit "Enable Mode", it is recommended to power Voltage not less than 15V