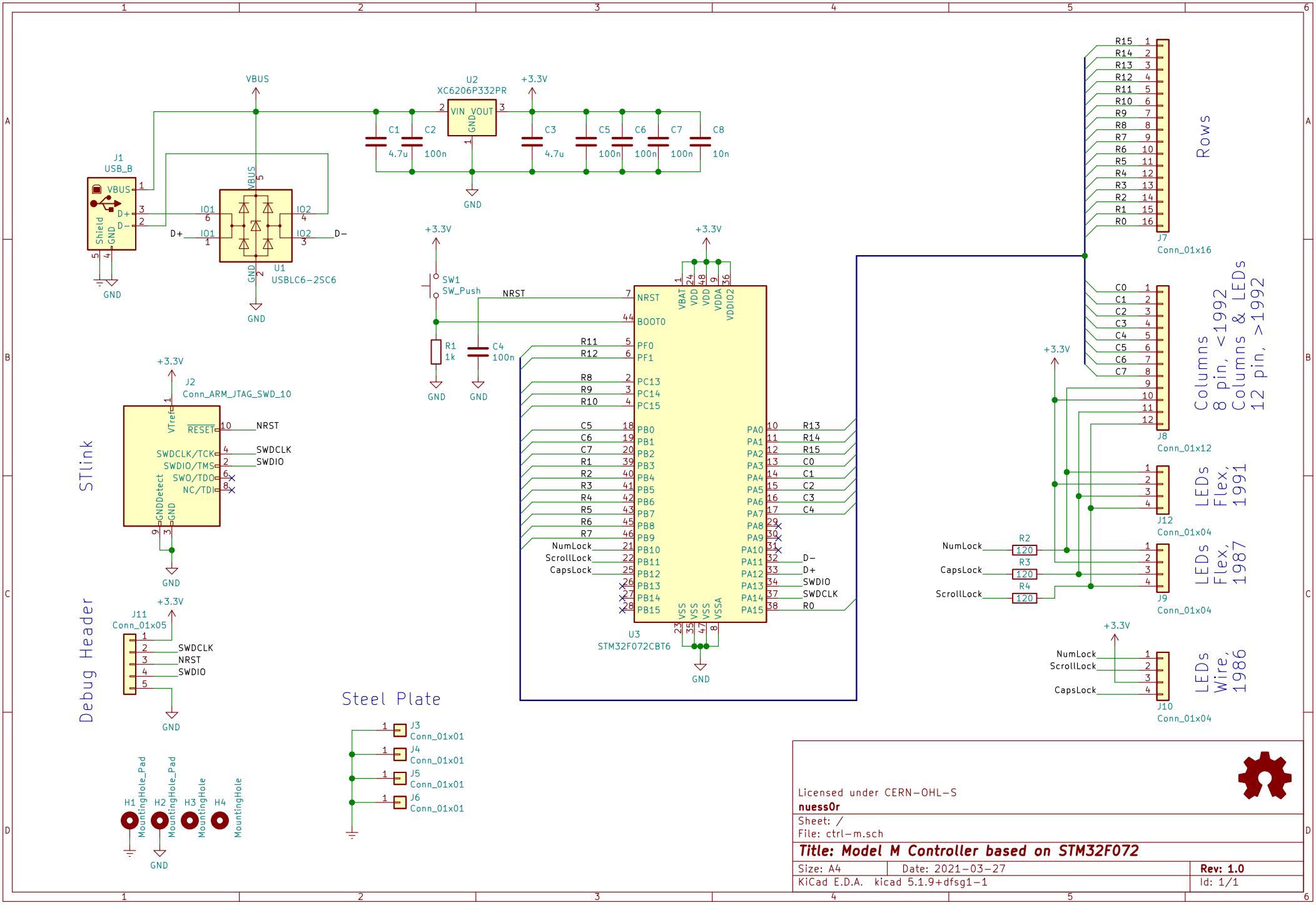

Licensed under CERN-OHL-S

nuess0r

Sheet: /
File: ctrl-m.sch

Title: Model M Controller based on STM32F072

Size: A4	Date: 2021-03-27	**Rev: 1.0**
KiCad E.D.A. kicad 5.1.9+dfsg1-1		Id: 1/1