RAISE YOUR PRODUCTIVITY

NR14N2S
NR14N2HS

NR16N2S
NR16N2HS
NR16N2
NR16N2H
NR16N2C
NR16N2HC

NR20N2H
NR20N2X
NR25N2X

SPECIFICATIONS

REACH TRUCKS 48V, 1.4 - 2.5 TONNES

MAXIMISE YOUR PROFITS

THE CAT® NR-N2 REACH TRUCK RANGE IS DESIGNED TO INCREASE YOUR PRODUCTIVITY AND PROFITS BY BOOSTING PERFORMANCE, EMPOWERING OPERATORS AND CUTTING COSTS. IT OFFERS YOU CLASS-LEADING RESIDUAL CAPACITIES, SMOOTHER AND MORE SENSITIVE CONTROL, SUPERIOR ERGONOMICS AND EASIER MAINTENANCE.

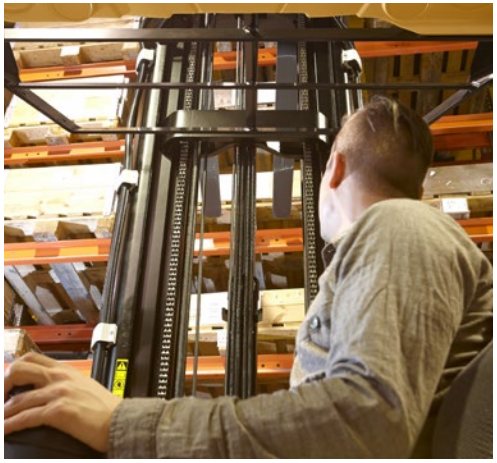

With hydraulic cylinders incorporated into its profile, the *poweRamic* mast is stronger, narrower and gives better visibility than conventional designs. All movements of the truck and its mast assembly are controlled smoothly and accurately thanks to the *Responsive Drive System (RDS)*.

The spacious cabin is furnished with a high-comfort Grammer seat, lined walls and convenient storage features. Advanced fingertip hydraulic controls are embedded into an ergonomic, adjustable armrest. Drivers can operate the adjustable steering wheel from a variety of hand positions.

Durable construction, long service intervals and easy access to components keep downtime and repair bills low. A premium, full-colour display with easy-to-learn functionality encourages careful truck use and maintenance. Optional Li-ion batteries add extra energy efficiency and are virtually maintenance-free.

The 11 models include high-performance versions for heavy duties, compact chassis choices for drive-in racking and tight spaces, and straddle-leg trucks for wide pallets. A comprehensive list of mast and fork accessories, and other options, matches trucks perfectly to their tasks.

LOWER COST OF OPERATION

- Robust construction minimises damage and wear.
- Easy access features include tilting and detachable seat, durable plastic machinery cover and tilting battery cover, which combine with long service interval (600 hours) to reduce downtime.
- High-spec display unit encourages correct maintenance, with functions including condition monitoring, fault alarms, diagnostics and servicing interval calculation.
- Removable buffer enables simple and quick drive wheel change, with no need to remove other components.
- Load wheels are positioned outside chassis to simplify service access, with a front cover for defence against collision with racking.
- Wear rails above support legs are easily exchanged to extend truck life.
- Oil tank return and suction filters reduce pump motor's maintenance needs.
- Li-ion battery option adds even greater efficiency and runtime, along with minimal maintenance needs and much longer life, for lower long-term total cost of operation (TCO).

UNMATCHED PRODUCTIVITY

- *poweRamic* mast enables class-leading capacity retention and lifts up to 13 metres.
- Passive sway control system keeps automatic parking brake open, so sway energy is absorbed by the whole truck's mass, while strong mast design and low-friction sideshift reduce swaying, twisting and noise.
- Active sway control option uses hydraulic pressure sensors and special software to calculate and apply counter-movements, rapidly halt swaying and increase operator confidence.
- *Responsive Drive System (RDS)* and new-generation controller technology provide sensitive control for driving and mast operations, to make work faster, safer, smoother and more comfortable.
- Full programmability includes user-set performance modes, engineer-customised settings and programmable mast damping.
- High-strength gearbox boosts loading capacity, reliability and productivity.
- Rigid attachment of driver compartment to strong truck base enables higher lifting, increases residual capacities and enhances driving characteristics.
- Latest reach carriage solution features adjustable clearance rollers for optimised mast behaviour.
- Wide drive wheel (140 mm) improves truck handling and stability, as well as slowing down wear.
- Large oil tank capacity maintains steady oil temperature, for reliable hydraulic functions and consistent load control which enable stable, high lifting.
- Lift height indicator and optional pre-selection maximise accuracy and speed when positioning loads at heights.
- Li-ion battery option increases efficiency and output, especially in intensive, multi-shift, 24/7 operations.
- Wide choice of battery and charger capacities allows the most suitable power supply to be matched to the exact requirements of a specific application.

SAFETY AND ERGONOMICS

- Spacious driver's compartment safely and comfortably accommodates users of all sizes.
- Steering assembly is adjustable in all directions, to suit driver's size and preference, and can be lifted upward for easy entry, exit and maintenance access.
- Steering wheel design features notches which allow control from many different hand positions, according to the driver's needs and habits.
- Adjustable cushioned armrest houses spring-force-optimised fingertip hydraulic controls and is designed to combine anatomical support with free movement and perfect hand positioning.
- Dual joystick option separates functions such as clamp opening, to avoid accidental moves, and is especially useful if fingertip levers are too small for operation with gloves (or large hands).
- Direction control by foot can be programmed – as an alternative to switching by hand on the armrest – if driver prefers.
- Large, optimally angled and positioned pedals give good control without strain.
- Dual pedal option helps productivity by enabling truck to change direction without the operator needing to use hand controls or adjust foot position.
- Multifunctional display keeps driver fully informed with bright, full-colour readouts in his or her own language, and is optimally positioned and angled for clear viewing.
- Cabin furnishing includes convenient storage features – for secure containment of items like drinks, documents, writing pad, pens, tools and phone – and the driver space is attractively lined with comfortable material.
- Grammer seats offer high comfort and ergonomic sitting position, with adjustment for driver size, weight and backrest tilt preference as standard.
- High-performance seat options with mechanical or air suspension offer choices including extra adjustments, additional support features and heating.
- Driver's entry and exit are aided by a wide, deep step, at optimal height, and by hand grips on each side which also protect shoulders when seated.
- Advanced mast, carriage and overhead guard designs give optimum combination of clear forward and upward vision, control and safety.
- Automatic drive speed reduction systems make smooth, stepless adjustments according to steering angle and lift height, to prevent unsafe driver behaviour when cornering or carrying raised loads.
- Reduced reach speed above initial lift adds a further safeguard against accidentally throwing loads from pallets.
- Progressive steering is steplessly adjusted according to drive speed, for optimum response and control.
- Operator presence pedal requires only the driver's leg weight – and no effort – to maintain its 'dead man' safety function.
- Emergency stop button is easy to reach from armrest.
- Strong battery locking mechanism combines with inbuilt broad battery rollers for fast, easy and safe exchanges.
- Battery change options include table for two batteries, fixed to floor, as well as quick-change system with battery lock pedal and lock-detecting sensor.

STANDARD EQUIPMENT AND OPTIONS

	NR14N2S	NR14N2HS	NR16N2S	NR16N2HS	NR16N2	NR16N2H	NR16N2C	NR16N2HC	NR20N2H	NR20N2X	NR25N2X
GENERAL											
Operator selectable economy or high performance modes ECO/PRO	●	●	●	●	●	●	●	●	●	●	●
Multifunctional colour display (hour meter, BDI, drive speed, time and date display)	●	●	●	●	●	●	●	●	●	●	●
Lift height indicator	●	●	●	●	●	●	●	●	●	●	●
Load weight indicator	○	○	○	○	○	○	○	○	○	●	●
Lift hydraulic and drive interlock / PDS	●	●	●	●	●	●	●	●	●	●	●
Integrated sideshift and tilt fork carriage	●	●	●	●	●	●	●	●	●	●	●
360-degree steering with fully adjustable steering column	●	●	●	●	●	●	●	●	●	●	●
Drive speed limitation according to lift height	●	●	●	●	●	●	●	●	●	●	●
Load wheel brakes	○	●	○	●	○	●	○	●	●	●	●
SST - Seat Switch Timeout: all functions are disabled, truck enters 'stop mode' and park brake is automatically applied	●	●	●	●	●	●	●	●	●	●	●
Trucktool set-up and diagnostics	●	●	●	●	●	●	●	●	●	●	●
Lateral battery change, chassis integrated roller bed	●	●	●	●	●	●	●	●	●	●	●
POWER SOURCE											
Li-ion battery* **	○	○	○	○	○	○	○	○	○	○	○
Lead-acid battery	○	○	○	○	○	○	○	○	○	○	○
HYDRAULIC											
5th hydraulic with hosing to fork carriage	○	○	○	○	○	○	○	○	○	○	○
MAST, FORKS AND CARRIAGE											
Load backrest	○	○	○	○	○	○	○	○	○	○	○
Tilt fork carriage with integrated sideshift	○	○	○	○	○	○	○	○	○	○	○
Fork positioner	○	○	○	○	○	○	○	○	○	○	○
Lift pre-height selector	○	○	○	○	○	○	○	○	○	○	○
Fork camera and colour 7" display	–	–	○	○	○	○	○	○	○	○	○
Load weight indicator in 25 kg increments	○	○	○	○	○	○	○	○	○	●	●
Telescopic forks	○	○	○	○	○	○	○	○	○	○	○
Passive sway control for mast	●	●	●	●	●	●	●	●	●	●	●
Active sway control for mast	○	○	○	○	○	○	○	○	○	○	○
DRIVE AND LIFT CONTROLS											
Variable speed control on all hydraulic controls	●	●	●	●	●	●	●	●	●	●	●
Curve control	●	●	●	●	●	●	●	●	●	●	●
Armrest direction control	●	●	●	●	●	●	●	●	●	●	●
Automatic sideshift and tilt centring via the F2 button on fingertip controller	○	○	○	○	○	○	○	○	○	○	○
Electric load wheel brakes	○	●	○	●	○	●	○	●	●	●	●
Lowering cut-off at 500 mm	○	○	○	○	○	○	○	○	○	○	○
Dual joystick	○	○	○	○	○	○	○	○	○	○	○
Dual pedal	○	○	○	○	○	○	○	○	○	○	○

* Li-ion battery option is available in selected regions.
** Not in combination with option Cold store cabin
*** Not in combination with Li-ion battery

● Standard ○ Option

FULL LI-ION* BATTERY INTEGRATION

Full integration of Li-ion battery communication on Cat reach trucks enables all battery-related information to be presented clearly via the truck's inbuilt full-colour display.

STANDARD EQUIPMENT AND OPTIONS

	NR14N2S	NR14N2HS	NR16N2S	NR16N2HS	NR16N2	NR16N2H	NR16N2C	NR16N2HC	NR20N2H	NR20N2X	NR25N2X
ELECTRIC											
Blue spot safety light, towards driving direction	○	○	○	○	○	○	○	○	○	○	○
Drive light LED	○	○	○	○	○	○	○	○	○	○	○
Working lights LED, mounted on mast towards fork direction	○	○	○	○	○	○	○	○	○	○	○
Warning light (yellow) on roof	○	○	○	○	○	○	○	○	○	○	○
Drive alarm	○	○	○	○	○	○	○	○	○	○	○
PIN code access	○	○	○	○	○	○	○	○	○	○	○
Current output 12V, 4.5A including 5V USB connector	○	○	○	○	○	○	○	○	○	○	○
24V, 12.5A power supply for accessories	○	○	○	○	○	○	○	○	○	○	○
Audio system, incl. speakers, 3.5 mm jack connector	○	○	○	○	○	○	○	○	○	○	○
OHG AND CABIN											
Cold storage cabin with heater and heated windows***	○	○	○	○	○	○	–	–	○	○	○
2-way intercom for cold store cabin	○	○	○	○	○	○	–	–	○	○	○
Grammer MSG20 cloth seat	●	●	●	●	●	●	–	–	●	●	●
Grammer MSG65 cloth seat with seat belt	○	○	○	○	○	○	●	●	○	○	○
Grammer MSG75 cloth seat with air suspension, armrest, backrest extension and seat belt	○	○	○	○	○	○	–	–	○	○	○
Rear view mirror, wide view	○	○	○	○	○	○	○	○	○	○	○
Plexi or steel net roof cover	○	○	○	○	○	○	○	○	○	○	○
Fire extinguisher	○	○	○	○	○	○	○	○	○	○	○
Accessory rack	○	○	○	○	○	○	○	○	○	○	○
A4 list bracket	○	○	○	○	○	○	○	○	○	○	○
Computer bracket	○	○	○	○	○	○	○	○	○	○	○
Narrow overhead guard for drive-in racking	–	–	–	–	–	–	●	●	–	–	–
WHEEL OPTIONS											
'Powerthane' polyurethane traction and load wheels	●	–	●	–	●	–	●	–	–	–	–
'Vulkollan' polyurethane traction and load wheels for high load weights	○	●	○	●	○	●	○	●	●	●	●
Power friction traction wheel	○	○	○	○	○	○	○	○	○	○	○
Anti-static wheel set	○	○	○	○	○	○	○	○	○	○	○
ENVIRONMENT											
Cold store design, 0°C to -35°C	○	○	○	○	○	○	○	○	○	○	○
Hot storage modification > 40°C	○	○	○	○	○	○	○	○	○	○	○

* Li-ion battery option is available in selected regions.
** Not in combination with option Cold store cabin
*** Not in combination with Li-ion battery

Optional dual joystick

Optional dual pedal

● Standard ○ Option

	Characteristics				
1.1	Manufacturer			Cat Lift Trucks	Cat Lift Trucks
1.2	Manufacturer's model designation			**NR14N2S**	**NR14N2HS**
1.3	Power source			Battery	Battery
1.4	Operator type			Sit-on	Sit-on
1.5	Load capacity	Q	(kg)	1400	1400
1.6	Load centre distance	c	(mm)	600	600
1.8	Load wheel axle to fork face (forks lowered)	x	(mm)	See table	See table
1.9	Wheelbase	y	(mm)	1300	1300
	Weight				
2.1b	Truck weight without load, with maximum battery weight		(kg)	3570	4297
2.3	Axle loadings without load and with maximum battery weight, drive / load side		(kg)	2041 / 1529	2318 / 1979
2.4	Axle loading, mast forward, with nominal load, drive / load side		(kg)	721 / 4249	814 / 4883
2.5	Axle loading, mast retracted, with nominal load, drive / load side		(kg)	1706 / 3264	1983 / 3714
	Wheels, drive train				
3.1	Tyres: PT = Power Thane, Vul = Vulkollan, P = Polyurethane, N = Nylon, R = Rubber drive / load side			PT	Vul
3.2	Tyre dimensions, drive side		(mm)	Ø360 x 140	Ø360 x 140
3.3	Tyre dimensions, load side		(mm)	Ø285 x 75	Ø285 x 75
3.5	Number of wheels, load / drive side (x = driven)			2 / 1 x	2 / 1 x
3.7	Track width (centre of tyres), load side	b11	(mm)	1195	1195
	Dimensions				
4.1	Fork tilt, forwards / backwards	∂, ß	(°)	2 / 4	2 / 4
4.2a	Height with mast lowered	h1	(mm)	See table	See table
4.3	Free lift	h2	(mm)	See table	See table
4.4	Lift height	h3	(mm)	See table	See table
4.5	Height with mast extended	h4	(mm)	See table	See table
4.7	Height to top of overhead guard	h6	(mm)	2200	2200
4.8	Seat or stand height	h7	(mm)	1030 [1]	1030 [1]
4.10	Height of support legs	h8	(mm)	360	360
4.15	Fork height, fully lowered	h13	(mm)	85	85
4.19	Overall length	l1	(mm)	See table	See table
4.20	Length to fork face	l2	(mm)	See table	See table
4.21	Overall width	b1/ b2	(mm)	1270	1270
4.22	Fork dimensions (thickness, width, length)	s / e / l	(mm)	40 / 100 / 1150	40 / 100 / 1150
4.23	Fork carriage to DIN			FEM 2A	FEM 2A
4.24	Fork carriage width	b3	(mm)	720	720
4.25	Outside width over forks (minimum / maximum)	b5	(mm)	315 - 710	315 - 710
4.26	Inner width of support legs	b4	(mm)	1070	1070
4.28	Mast reach	l4	(mm)	See table	See table
4.32	Ground clearance at centre of wheelbase (forks lowered)	m2	(mm)	75	75
4.33a	Working aisle width (Ast) with 1000 x 1200 mm pallets, load crosswise	Ast	(mm)	See table	See table
4.33b	Working aisle width (Ast3) with 1000 x 1200 mm pallets, load crosswise	Ast3	(mm)	See table	See table
4.34a	Working aisle width (Ast) with 800 x 1200 mm pallets, load lengthwise	Ast	(mm)	See table	See table
4.34b	Working aisle width (Ast3) with 800 x 1200 mm pallets, load lengthwise	Ast3	(mm)	See table	See table
4.35	Turning radius	Wa	(mm)	See table	See table
4.37	Truck length including support legs	l7	(mm)	1693	1693
	Performance				
5.1	Travel speed, with / without load		km / h	12 / 12 [4]	12 / 12 [4]
5.2	Lifting speed, with / without load		m / s	0.4 / 0.65	0.4 / 0.7
5.3	Lowering speed, with / without load		m / s	0.55 / 0.5	0.55 / 0.5
5.5	Rated drawbar pull, with / without load		N	0.2 / 0.2	0.2 / 0.2
5.8	Maximum gradeability with / without load		%	10 / 15	10 / 15
5.9	Acceleration time (10 metres) with / without load		s	5.0 / 4.5	4.8 / 4.4
5.10	Service brakes (mechanical / hydraulic / electric / pneumatic)			Electric	Electric
	Electric motors				
6.1	Drive motor capacity (60 min. short duty)		kW	7.5	7.5
6.2	Lift motor output at 15% duty factor		kW	10	14
6.4	Battery voltage/capacity at 5-hour discharge		V / Ah	48-465 / 620 / 775	48-620 / 775
6.5	Battery weight		kg	700, 900, 1100	900, 1100
	Miscellaneous				
8.1	Type of drive control			Stepless	Stepless
10.7	Level of noise at the ear level of the driver according to EN 12 053:2001 and EN ISO 4871 in work LpAZ		dB (A)	66 [2]	71 [2]
10.7.1	Level of noise at the ear level of the driver according to EN 12 053:2001 and EN ISO 4871, drive/lift/idle LpAZ		dB (A)	58 / 73 / 50 [2]	61 / 69 / 48 [2]
10.7.2	Whole-body vibration (EN 13 059:2002)			0.31 [3]	0.31 [3]
10.7.3	Hand-arm vibration (EN 13 059:2002)			< 2.5 [3]	< 2.5 [3]

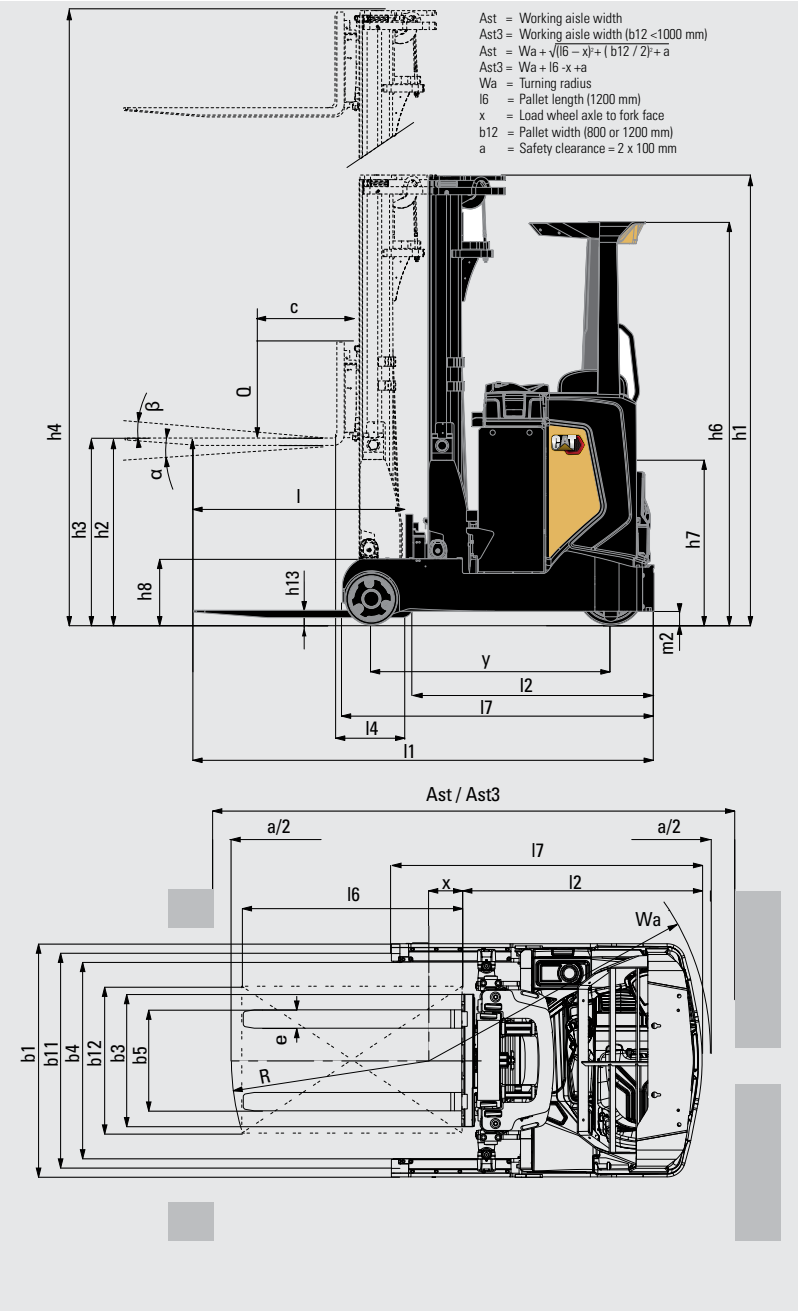

1) Measured with standard seat to SIP point
2) Inaccuracy of 4dB (A)
3) Body tremble measured with air pressured seat
4) Max drive speed to fork direction 9 km/h

SPECIFICATIONS REACH TRUCKS 48V, 1.4 - 2.5 TONNES

	Characteristics							
1.1	Manufacturer			Cat Lift Trucks	Cat Lift Trucks	Cat Lift Trucks	Cat Lift Trucks	Cat Lift Trucks	Cat Lift Trucks
1.2	Manufacturer's model designation			**NR16N2S**	**NR16N2HS**	**NR16N2**	**NR16N2H**	**NR16N2C**	**NR16N2HC**
1.3	Power source			Battery	Battery	Battery	Battery	Battery	Battery
1.4	Operator type			Sit-on	Sit-on	Sit-on	Sit-on	Sit-on	Sit-on
1.5	Load capacity	Q	(kg)	1600	1600	1600	1600	1600	1600
1.6	Load centre distance	c	(mm)	600	600	600	600	600	600
1.8	Load wheel axle to fork face (forks lowered)	x	(mm)	See table	See table	See table	See table	See table	See table
1.9	Wheelbase	y	(mm)	1300	1300	1350	1350	1400	1400
	Weight								
2.1	Truck weight without load, with maximum battery weight		(kg)	3591	4297	3845	4571	3509	4039
2.3	Axle loadings without load and with maximum battery weight, drive / load side		(kg)	2041 / 1550	2318 / 1979	2114 / 1731	2389 / 2182	1958 / 1551	2114 / 1925
2.4	Axle loading, mast forward, with nominal load, drive / load side		(kg)	706 / 4486	814 / 4883	735 / 4709	833 / 5338	628 / 4480	614 / 5024
2.5	Axle loading, mast retracted, with nominal load, drive / load side		(kg)	1686 / 3506	1983 / 3714	1745 / 3699	2020 / 4151	1602 / 3507	1759 / 3880
	Wheels, drive train								
3.1	Tyres: PT = Power Thane, Vul = Vulkollan, P = Polyurethane, N = Nylon, R = Rubber drive / load side			PT	Vul	PT	Vul	PT	Vul
3.2	Tyre dimensions, drive side		(mm)	Ø360 x 140	Ø360 x 140	Ø360 x 140	Ø360 x 140	Ø360 x 140	Ø360 x 140
3.3	Tyre dimensions, load side		(mm)	Ø285 x 75	Ø285 x 75	Ø285 x 130	Ø285 x 130	Ø285 x 75	Ø285 x 75
3.5	Number of wheels, load / drive side (x = driven)			2 / 1 x	2 / 1 x	2 / 1 x	2 / 1 x	2 / 1 x	2 / 1 x
3.7	Track width (centre of tyres), load side	b11	(mm)	1195	1195	1140	1140	1025	1025
	Dimensions								
4.1	Fork tilt, forwards / backwards	∂, ß	(°)	2 / 4	2 / 4	2 / 4	2 / 4	2 / 4	2 / 4
4.2a	Height with mast lowered	h1	(mm)	See table	See table	See table	See table	See table	See table
4.3	Free lift	h2	(mm)	See table	See table	See table	See table	See table	See table
4.4	Lift height	h3	(mm)	See table	See table	See table	See table	See table	See table
4.5	Height with mast extended	h4	(mm)	See table	See table	See table	See table	See table	See table
4.7	Height to top of overhead guard	h6	(mm)	2200	2200	2200	2200	2200	2200
4.8	Seat or stand height	h7	(mm)	1030 [1]	1030 [1]	1030 [1]	1030 [1]	1030 [1]	1030 [1]
4.10	Height of support legs	h8	(mm)	360	360	360	360	360	360
4.15	Fork height, fully lowered	h13	(mm)	85	85	85	85	85	85
4.19	Overall length	l1	(mm)	See table	See table	See table	See table	See table	See table
4.20	Length to fork face	l2	(mm)	See table	See table	See table	See table	See table	See table
4.21	Overall width	b1/ b2	(mm)	1270	1270	1270	1270	1100	1100
4.22	Fork dimensions (thickness, width, length)	s / e / l	(mm)	40 / 100 / 1150	40 / 100 / 1150	40 / 100 / 1150	40 / 100 / 1150	40 / 100 / 1150	40 / 100 / 1150
4.23	Fork carriage to DIN			FEM 2A	FEM 2A	FEM 2A	FEM 2A	FEM 2A	FEM 2A
4.24	Fork carriage width	b3	(mm)	720	720	720	720	720	720
4.25	Outside width over forks (minimum / maximum)	b5	(mm)	315 - 710	315 - 710	315 - 710	315 - 710	315 - 710	315 - 710
4.26	Inner width of support legs	b4	(mm)	1070	1070	900	900	900	900
4.28	Mast reach	l4	(mm)	See table	See table	See table	See table	See table	See table
4.32	Ground clearance at centre of wheelbase (forks lowered)	m2	(mm)	75	75	75	75	75	75
4.33a	Working aisle width (Ast) with 1000 x 1200 mm pallets, load crosswise	Ast	(mm)	See table	See table	See table	See table	See table	See table
4.33b	Working aisle width (Ast3) with 1000 x 1200 mm pallets, load crosswise	Ast3	(mm)	See table	See table	See table	See table	See table	See table
4.34a	Working aisle width (Ast) with 800 x 1200 mm pallets, load lengthwise	Ast	(mm)	See table	See table	See table	See table	See table	See table
4.34b	Working aisle width (Ast3) with 800 x 1200 mm pallets, load lengthwise	Ast3	(mm)	See table	See table	See table	See table	See table	See table
4.35	Turning radius	Wa	(mm)	See table	See table	See table	See table	See table	See table
4.37	Truck length including support legs	l7	(mm)	1693	1693	1793	1793	1793	1793
	Performance								
5.1	Travel speed, with / without load		km / h	12 / 12 [4]	12 / 12 [4]	12 / 12 [4]	14 / 14 [4]	12 / 12 [4]	12 / 12 [4]
5.2	Lifting speed, with / without load		m / s	0.4 / 0.65	0.4 / 0.7	0.4 / 0.65	0.4 / 0.7	0.4 / 0.65	0.4 / 0.7
5.3	Lowering speed, with / without load		m / s	0.55 / 0.5	0.55 / 0.5	0.55 / 0.5	0.55 / 0.5	0.55 / 0.5	0.55 / 0.5
5.5	Rated drawbar pull, with / without load		N	0.2 / 0.2	0.2 / 0.2	0.2 / 0.2	0.2 / 0.2	0.2 / 0.2	0.2 / 0.2
5.8	Maximum gradeability with / without load		%	10 / 15	10 / 15	10 / 15	10 / 15	10 / 15	10 / 15
5.9	Acceleration time (10 metres) with / without load		s	5.0 / 4.5	4.8 / 4.4	5.0 / 4.5	4.8 / 4.6	5.0 / 4.5	4.8 / 4.8
5.10	Service brakes (mechanical / hydraulic / electric / pneumatic)			Electric	Electric	Electric	Electric	Electric	Electric
	Electric motors								
6.1	Drive motor capacity (60 min. short duty)		kW	7.5	7.5	7.5	7.5	7.5	7.5
6.2	Lift motor output at 15% duty factor		kW	10	14	10	14	10	14
6.4	Battery voltage/capacity at 5-hour discharge		V / Ah	48-465 / 620 / 775	48-620 / 775	48-465 / 620 / 775	48-620 / 775	48-620 / 775	48-620
6.5	Battery weight		kg	700, 900, 1100	900, 1100	700, 900, 1100	900, 1100	700, 900	900
	Miscellaneous								
8.1	Type of drive control			Stepless	Stepless	Stepless	Stepless	Stepless	Stepless
10.7	Level of noise at the ear level of the driver according to EN 12 053:2001 and EN ISO 4871 in work LpAZ		dB (A)	66 [2]	63 [2]	66 [2]	63 [2]	66 [2]	63 [2]
10.7.1	Level of noise at the ear level of the driver according to EN 12 053:2001 and EN ISO 4871, drive/lift/idle LpAZ		dB (A)	58 / 73 / 50 [2]	61 / 69 / 48 [2]	58 / 73 / 50 [2]	61 / 69 / 48 [2]	58 / 73 / 50	61 / 69 / 48 [2]
10.7.2	Whole-body vibration (EN 13 059:2002)			0.31 [3]	0.31 [3]	0.31 [3]	0.31 [3]	0.31 [3]	0.31 [3]
10.7.3	Hand-arm vibration (EN 13 059:2002)			< 2.5 [3]	< 2.5 [3]	< 2.5 [3]	< 2.5 [3]	< 2.5 [3]	< 2.5 [3]

Ast = Working aisle width
Ast3 = Working aisle width (b12 <1000 mm)
Ast = $Wa + \sqrt{(l6 - x)^2 + (b12 / 2)^2} + a$
Ast3 = Wa + l6 -x +a
Wa = Turning radius
l6 = Pallet length (1200 mm)
x = Load wheel axle to fork face
b12 = Pallet width (800 or 1200 mm)
a = Safety clearance = 2 x 100 mm

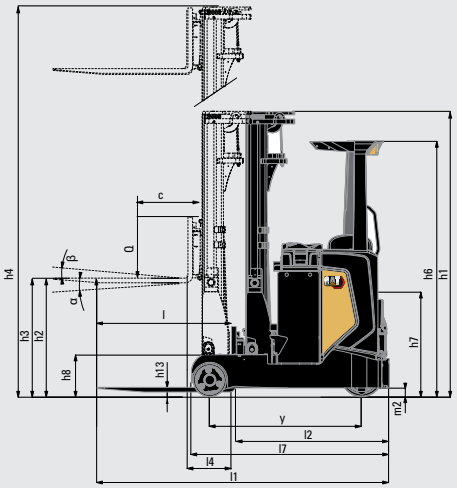

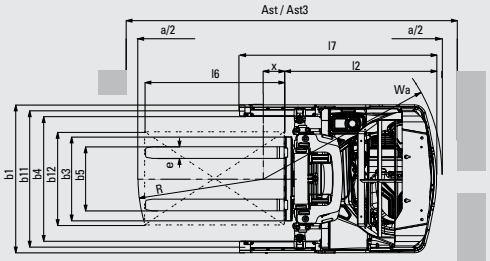

1) Measured with standard seat to SIP point
2) Inaccuracy of 4dB (A)
3) Body tremble measured with air pressured seat
4) Max drive speed to fork direction 9 km/h

	Characteristics					
1.1	Manufacturer			Cat Lift Trucks	Cat Lift Trucks	Cat Lift Trucks
1.2	Manufacturer's model designation			**NR20N2H**	**NR20N2X**	**NR25N2X**
1.3	Power source			Battery	Battery	Battery
1.4	Operator type			Sit-on	Sit-on	Sit-on
1.5	Load capacity	Q	(kg)	2000	2000	2500
1.6	Load centre distance	c	(mm)	600	600	600
1.8	Load wheel axle to fork face (forks lowered)	x	(mm)	See table	See table	See table
1.9	Wheelbase	y	(mm)	1500	1500	1500
	Weight					
2.1	Truck weight without load, with maximum battery weight		(kg)	4570	5065	4656
2.3	Axle loadings without load and with maximum battery weight, drive / load side		(kg)	2435 / 2135	2620 / 2445	2466 / 2190
2.4	Axle loading, mast forward, with nominal load, drive / load side		(kg)	910 / 5660	680 / 6385	675 / 6480
2.5	Axle loading, mast retracted, with nominal load, drive / load side		(kg)	2020 / 4550	2090 / 4975	1947 / 5208
	Wheels, drive train					
3.1	Tyres: PT = Power Thane, Vul = Vulkollan, P = Polyurethane, N = Nylon, R = Rubber drive / load side			Vul	Vul	Vul
3.2	Tyre dimensions, drive side		(mm)	Ø360 x 140	Ø360 x 140	Ø360 x 140
3.3	Tyre dimensions, load side		(mm)	Ø285 x 130	Ø285 x 130	Ø285 x 130
3.5	Number of wheels, load / drive side (x = driven)			2 / 1 x	2 / 1 x	2 / 1 x
3.7	Track width (centre of tyres), load side	b11	(mm)	1140	1310	1310
	Dimensions					
4.1	Fork tilt, forwards / backwards	∂, ß	(°)	2 / 4	2 / 4	2 / 4
4.2a	Height with mast lowered	h1	(mm)	See table	See table	See table
4.3	Free lift	h2	(mm)	See table	See table	See table
4.4	Lift height	h3	(mm)	See table	See table	See table
4.5	Height with mast extended	h4	(mm)	See table	See table	See table
4.7	Height to top of overhead guard	h6	(mm)	2200	2200	2200
4.8	Seat or stand height	h7	(mm)	1030 [1]	1030 [1]	1030 [1]
4.10	Height of support legs	h8	(mm)	360	360	360
4.15	Fork height, fully lowered	h13	(mm)	85	85	85
4.19	Overall length	l1	(mm)	See table	See table	See table
4.20	Length to fork face	l2	(mm)	See table	See table	See table
4.21	Overall width	b1/ b2	(mm)	1270	1440	1440
4.22	Fork dimensions (thickness, width, length)	s / e / l	(mm)	50 / 100 / 1150	50 / 100 / 1150	50 / 100 / 1150
4.23	Fork carriage to DIN			FEM 2A	FEM 2A	FEM 2A
4.24	Fork carriage width	b3	(mm)	720	720	720
4.25	Outside width over forks (minimum / maximum)	b5	(mm)	315 - 710	315 - 710	315 - 710
4.26	Inner width of support legs	b4	(mm)	900	1070	1070
4.28	Mast reach	l4	(mm)	See table	See table	See table
4.32	Ground clearance at centre of wheelbase (forks lowered)	m2	(mm)	75	75	75
4.33a	Working aisle width (Ast) with 1000 x 1200 mm pallets, load crosswise	Ast	(mm)	See table	See table	See table
4.33b	Working aisle width (Ast3) with 1000 x 1200 mm pallets, load crosswise	Ast3	(mm)	See table	See table	See table
4.34a	Working aisle width (Ast) with 800 x 1200 mm pallets, load lengthwise	Ast	(mm)	See table	See table	See table
4.34b	Working aisle width (Ast3) with 800 x 1200 mm pallets, load lengthwise	Ast3	(mm)	See table	See table	See table
4.35	Turning radius	Wa	(mm)	See table	See table	See table
4.37	Truck length including support legs	l7	(mm)	1893	1893	1893
	Performance					
5.1	Travel speed, with / without load		km / h	14 / 14 [4]	11 / 14 [4]	11 / 14 [4]
5.2	Lifting speed, with / without load		m / s	0.4 / 0.7	0.4 / 0.7	0.3 / 0.7
5.3	Lowering speed, with / without load		m / s	0.55 / 0.5	0.55 / 0.5	0.55 / 0.5
5.5	Rated drawbar pull, with / without load		N	0.2 / 0.2	0.2 / 0.2	0.2 / 0.2
5.8	Maximum gradeability with / without load		%	10 / 15	10 / 15	10 / 15
5.9	Acceleration time (10 metres) with / without load		s	4.8 / 4.4	5.2 / 4.4	5.2 / 4.4
5.10	Service brakes (mechanical / hydraulic / electric / pneumatic)			Electric	Electric	Electric
	Electric motors					
6.1	Drive motor capacity (60 min. short duty)		kW	7.5	7.5	7.5
6.2	Lift motor output at 15% duty factor		kW	14	14	14
6.4	Battery voltage/capacity at 5-hour discharge		V / Ah	48-620 / 775 / 930	48-620 / 775 / 930	48-620 / 775 / 930
6.5	Battery weight		kg	900, 1100, 1300	900, 1100, 1300	900, 1100, 1300
	Miscellaneous					
8.1	Type of drive control			Stepless	Stepless	Stepless
10.7	Level of noise at the ear level of the driver according to EN 12 053:2001 and EN ISO 4871 in work LpAZ		dB (A)	63 [2]	63 [2]	63 [2]
10.7.1	Level of noise at the ear level of the driver according to EN 12 053:2001 and EN ISO 4871, drive/lift/idle LpAZ		dB (A)	61 / 69 / 48 [2]	61 / 69 / 48 [2]	61 / 69 / 48 [2]
10.7.2	Whole-body vibration (EN 13 059:2002)			0.31 [3]	0.31 [3]	0.31 [3]
10.7.3	Hand-arm vibration (EN 13 059:2002)			< 2.5 [3]	< 2.5 [3]	< 2.5 [3]

Ast = Working aisle width
Ast3 = Working aisle width (b12 <1000 mm)
Ast = $Wa + \sqrt{(l6 - x)^2 + (b12 / 2)^2} + a$
Ast3 = Wa + l6 -x +a
Wa = Turning radius
l6 = Pallet length (1200 mm)
x = Load wheel axle to fork face
b12 = Pallet width (800 or 1200 mm)
a = Safety clearance = 2 x 100 mm

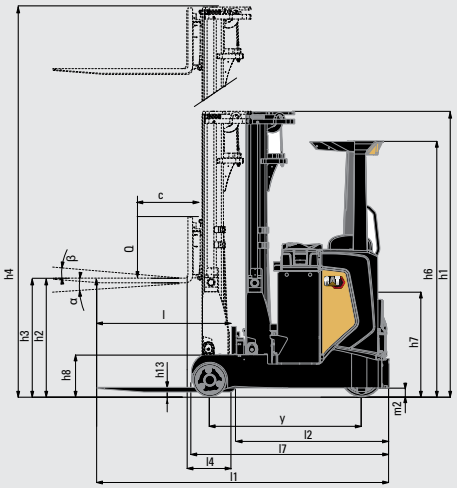

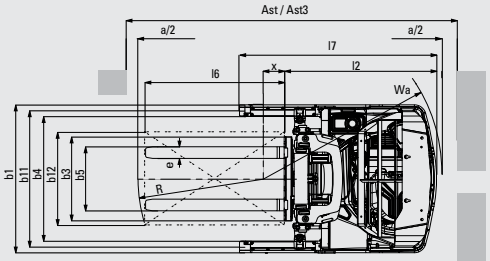

1) Measured with standard seat to SIP point
2) Inaccuracy of 4dB (A)
3) Body tremble measured with air pressured seat
4) Max drive speed to fork direction 9 km/h

NR14N2S - NR16N2S - NR16N2 - NR16N2C				
Mast Type	h3 + h13	h1	h2 + h13	h4[1)]
	mm	mm	mm	mm
T	4800	2210	1560	5630
	5400	2410	1760	6230
	5700	2510	1860	6530
	5900	2577	1927	6730
	6300	2710	2060	7130
	7000	2943	2293	7830
	7500	3110	2460	8330

NR14N2HS - NR16N2HS - NR16N2H - NR16N2HC				
Mast Type	h3 + h13	h1	h2 + h13	h4[1)]
	mm	mm	mm	mm
T	8000	3297	2647	8830
	8500	3436	2813	9330
	9000	3785	3135	9830
	9500	3952	3387	10330

NR20N2H - NR25N2X - NR20N2X				
Mast Type	h3 + h13	h1	h2 + h13	h4[1)]
	mm	mm	mm	mm
T	4800	2230	1580	5630
	5400	2430	1780	6230
	5700	2530	1880	6530
	5900	2597	1947	6730
	6300	2730	2080	7130
	7000	2963	2313	7830
	7500	3130	2480	8330
	8000	3297	2647	8830
	8500	3463	2813	9330
	9000	3785	3135	9830
	9500	3952	3302	10330
	10000	4118	3468	10830
	10500	4285	3635	11330
	11000	4452	3802	11830
	11500	4618	3968	12330

NR20N2X				
Mast Type	h3 + h13	h1	h2 + h13	h4[1)]
	mm	mm	mm	mm
T	12000	4785	4135	12830
	12500	4952	4302	13330
	13000	5118	4468	13830

Mast Performance and Capacity

T	Triplex poweRamic mast
h1	Lowered mast height
h2 + h13	Free lift
h3 + h13	Lift height
h4	Raised mast height
Q	Lifting capacity, rated load
c	Load centre (distance)

1) Including load backrest

Model	Battery Capacity	Battery Weight	4.33a Ast	4.33b Ast3	4.34a Ast	4.34b Ast3	4.28 L4	4.20 L2	4.19 L1	1.8 x	4.35 Wa
	Ah	kg	mm	mm	mm	mm	mm	mm	mm	mm	mm
NR14N2S	465	700	2677	2460	2743	2660	463	1254	2404	281	1541
	620	900	2734	2532	2810	2732	391	1326	2476	209	1541
	775	1100	2792	2604	2877	2804	319	1398	2548	137	1541
NR14N2HS	620	900	2742	2542	2819	2742	382	1336	2486	199	1541
	775	1100	2800	2614	2886	2814	310	1408	2558	127	1541
NR16N2S	465	700	2677	2460	2743	2660	463	1254	2404	281	1541
	620	900	2734	2532	2810	2732	391	1326	2476	209	1541
	775	1100	2792	2604	2877	2804	319	1398	2548	137	1541
NR16N2HS	620	900	2742	2542	2819	2742	382	1336	2486	199	1541
	775	1100	2800	2614	2886	2814	310	1408	2558	127	1541
NR16N2C	465	700	2731	2502	2789	2702	510	1308	2458	327	1629
	620	900	2800	2592	2872	2792	420	1398	2548	237	1629
NR16N2HC	620	900	2807	2601	2880	2801	410	1408	2558	228	1629
NR16N2	465	700	2728	2498	2786	2698	513	1254	2404	331	1629
	620	900	2782	2570	2851	2770	441	1326	2476	259	1629
	775	1100	2839	2642	2918	2842	369	1398	2548	187	1629
NR16N2H	620	900	2790	2545	2861	2780	432	1336	2486	249	1629
	775	1100	2847	2617	2927	2852	360	1408	2558	177	1629
NR20N2H	620	900	2784	2536	2830	2736	582	1336	2486	399	1735
	775	1100	2837	2608	2895	2808	510	1408	2558	327	1735
	930	1300	2892	2680	2961	2880	438	1480	2630	255	1735
NR20N2X	620	900	2805	2560	2853	2760	572	1346	2496	389	1749
	775	1100	2858	2632	2918	2832	500	1418	2568	317	1749
	930	1300	2913	2704	2984	2904	428	1490	2640	245	1749
NR25N2X	620	900	2805	2560	2853	2760	572	1346	2496	389	1749
	775	1100	2858	2632	2918	2832	500	1418	2568	317	1749
	930	1300	2913	2704	2984	2904	428	1490	2640	245	1749

LI-ION BATTERIES

TIME TO SWITCH?

LiION BATTERY TECHNOLOGY

Lithium-ion (Li-ion) battery technology is available in the Cat® electric counterbalance and warehouse truck ranges. While lead-acid batteries remain a popular choice for our customers, and still have much to offer, they present various challenges which Li-ion can overcome.

Perhaps the most noticeable change when switching to Li-ion is the use of opportunity charging. Instead of exchanging batteries between shifts, you can simply plug into a fast charger during short breaks and keep the same battery going 24/7. This, together with other efficiency, environmental and safety benefits, makes Li-ion a very appealing alternative.

LONGER LIFE

UP TO 30% HIGHER EFFICIENCY

LONGER RUNTIME

CONSISTENT PERFORMANCE

FASTER CHARGING

NO BATTERY CHANGING

NO DAILY MAINTENANCE

INBUILT PROTECTION

Cat Li-ion advantages over lead-acid

Li-ion is an investment which should be viewed against ongoing savings on energy, equipment, labour and downtime.

- **Longer life** – 3 to 4 times lead-acid lifespan – reduces overall battery investment
- **Higher efficiency** – energy losses during charging and discharging are up to 30% lower, so electricity consumption is reduced
- **Longer runtime** – thanks to more efficient battery performance and use of opportunity charges, which can be given at any time without damaging the battery or shortening its lifespan
- **Consistently high performance** – with a more constant voltage curve – maintains greater truck productivity, even toward the end of a shift
- **Faster charging** – enables full charge in as little as 1 hour with the fastest chargers
- **No battery changing** – fast opportunity charges – 15 minutes for several hours of extra runtime – enable continuous operation with just one battery and minimise the need to buy, store and maintain spares
- **No daily maintenance** – the battery stays on board the truck for charging and there is no need for water top-ups or electrolyte checks
- **No gas** – or acid spills – avoids the space, equipment and running costs of a battery room and ventilation system
- **Inbuilt protection** – intelligent battery management system (BMS) automatically prevents excessive discharge, charge, voltage and temperature, as well as virtually eliminating misuse

Batteries and chargers with different capacities are available. Your dealer will identify the best combination for your needs. You should also ask your dealer about optional 5-year warranties, subject to annual check-ups, which give extra peace of mind.

info@catlifttruck.com | www.catlifttruck.com

WESC2242(04/22) © 2022 MLE B.V. (registration no. 33274459). All rights reserved. CAT, CATERPILLAR, LET'S DO THE WORK, their respective logos, "Caterpillar Corporate Yellow", the "Power Edge" and Cat "Modern Hex" trade dress as well as corporate and product identity used herein, are trademarks of Caterpillar and may not be used without permission.

NOTE: Performance specifications may vary depending on standard manufacturing tolerances, vehicle condition, types of tyres, floor or surface conditions, applications, or operating environment. Trucks may be shown with non-standard options. Specific performance requirements and locally available configurations should be discussed with your Cat lift trucks Dealer. Cat Lift Trucks follows a policy of continual product improvement. For this reason, some materials, options and specifications could change without notice.

DOWNLOAD BROCHURE

WATCH VIDEOS

DOWNLOAD OUR APP

CAT®