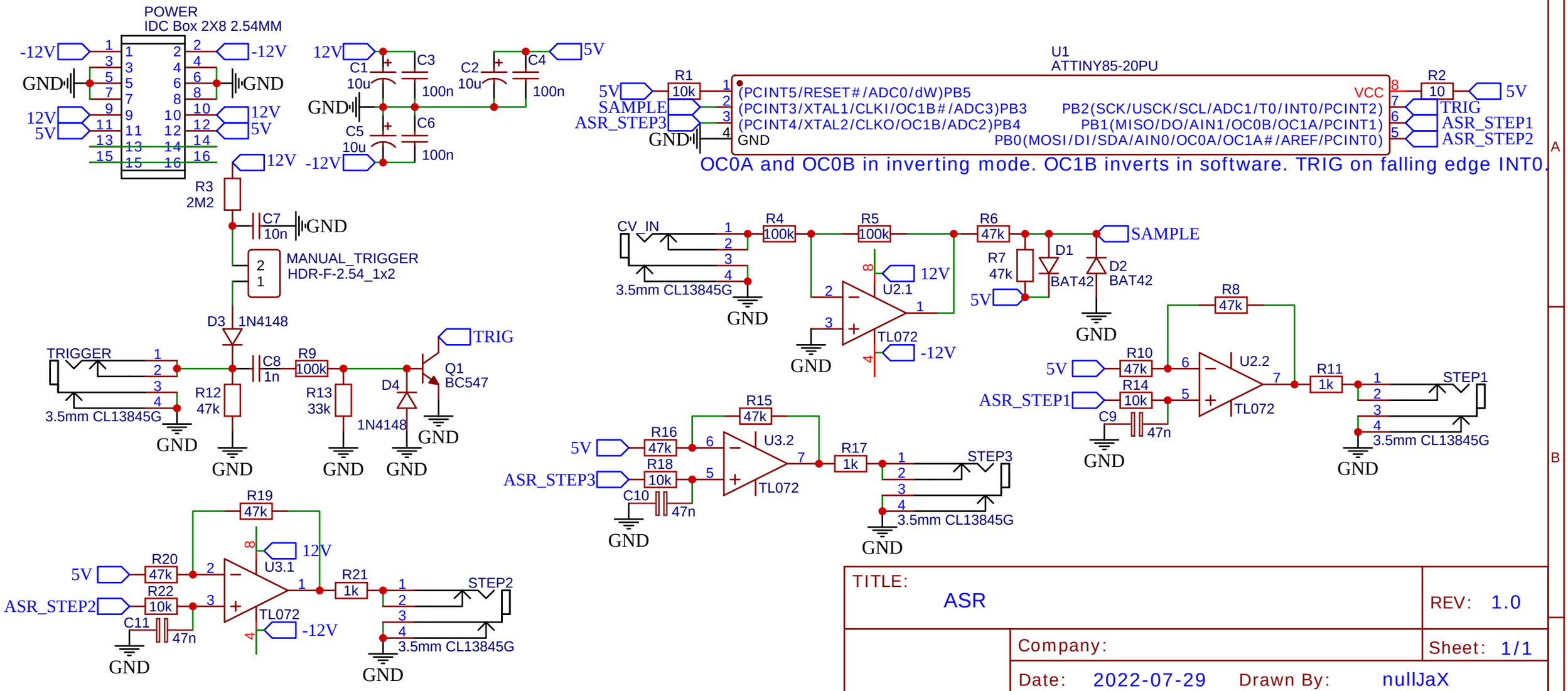

TITLE: ASR	REV: 1.0
Company:	Sheet: 1/1
Date: 2022-07-29 Drawn By: nullJaX	