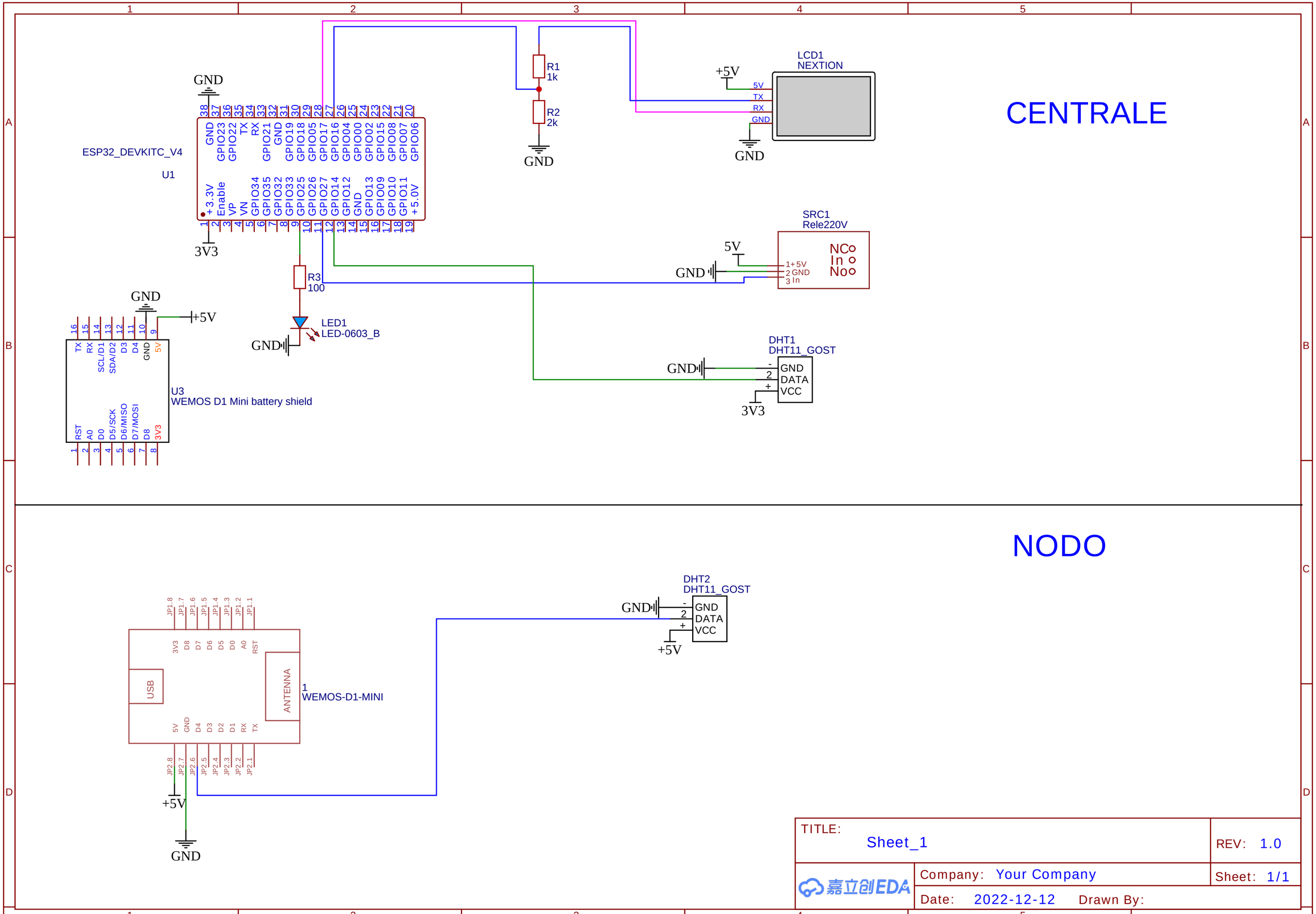
CENTRALE
ESP32_DEVKITC_V4
U1
GND
3V3
R1
1k
R2
2k
R3
100
LCD1
NEXTION
+5V
5V
TX
RX
GND
SRC1
Rele220V
NC
In
No
1+5V
2 GND
3 In
LED1
LED-0603_B
DHT1
DHT11_GOST
DATA
VCC
U3
WEMOS D1 Mini battery shield
NODO
DHT2
DHT11_GOST
USB
ANTENNA
1
WEMOS-D1-MINI
TITLE:
Sheet_1
REV: 1.0
Company: Your Company
Sheet: 1/1
Date: 2022-12-12
Drawn By: