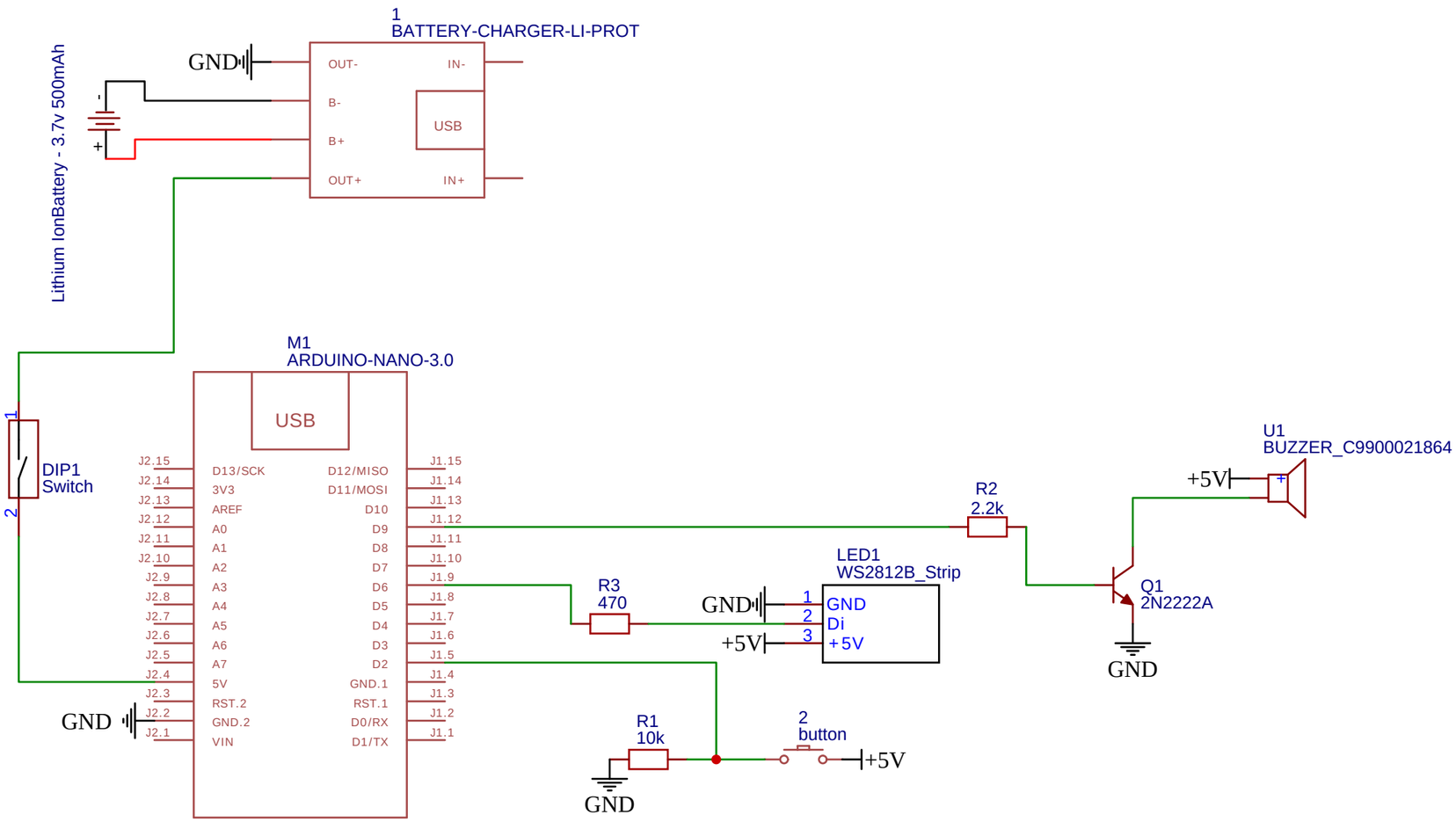

TITLE: Sheet_1	REV: 1.0
Company: Your Company	Sheet: 1/1
Date: 2022-11-26 Drawn By: Alessandro Toscana	