MONASH University

ETC4500/ETC5450
Advanced R programming

Week 6: Functional programming

Outline

1 Programming paradigms

2 Functional programming

3 Functional problem solving

Outline

1 Programming paradigms

2 Functional programming

3 Functional problem solving

Programming paradigms

R code is typically structured using these paradigms:

- Literate programming
- Reactive programming
- Functional programming
- Object-oriented programming

Often several paradigms used together to solve a problem.

Programming paradigms

Literate programming

- Natural language is interspersed with code.
- Aimed at prioritising documentation/comments.
- Now used to create reproducible reports/documents.
- e.g., R Markdown, Quarto, Jupyter Notebooks, etc.

Programming paradigms

Literate programming

- Natural language is interspersed with code.
- Aimed at prioritising documentation/comments.
- Now used to create reproducible reports/documents.
- e.g., R Markdown, Quarto, Jupyter Notebooks, etc.

Reactive programming

- Objects are expressed using code based on inputs.
- When inputs change, the object's value updates.
- e.g., Shiny

Programming paradigms

Object-oriented programming (W8 - W9)

- Functions are associated with object types.
- Methods of the same ‘function’ produce object-specific output.

Programming paradigms

Object-oriented programming (W8 - W9)

- Functions are associated with object types.
- Methods of the same ‘function’ produce object-specific output.

Functional programming (W6; today!)

- Functions are created and used like any other object.
- Output should only depend on the function’s inputs.

Outline

1 Programming paradigms

2 Functional programming

3 Functional problem solving

Functional programming

R is commonly considered a ‘functional’ programming language - and so far we have used functional programming.

```
square <- function(x) {
  return(x^2)
}
square(8)
```

```
[1] 64
```

The `square` function is an object like any other in R.

Functions are objects

R functions can be printed

```
print(square)
```

```
function (x)
{
    return(x^2)
}
```

Functions are objects

R functions can be printed

```
print(square)
```

```
function (x)
{
    return(x^2)
}
```

R functions can be inspected

```
formals(square)
```

```
$x
```

Functions are objects

R functions can be put in a list

```
my_functions <- list(square, sum, min, max)
my_functions
```

```
[[1]]
function (x)
{
    return(x^2)
}

[[2]]
function (..., na.rm = FALSE)  .Primitive("sum")
```

```
[[3]]
function (..., na.rm = FALSE)  .Primitive("min")

[[4]]
function (..., na.rm = FALSE)  .Primitive("max")
```

Functions are objects

R functions can used within lists,

```
my_functions[[1]](8)
```

```
[1] 64
```

Functions are objects

R functions can used within lists,

```
my_functions[[1]](8)
```

```
[1] 64
```

but they can’t be subsetted!

```
square$x
```

```
Error in `square$x`:
! object of type 'closure' is not subsettable
```

Handling input types

Functional programming handles different input types using control flow. The same code is ran regardless of object type.

```
square <- function(x) {
  if(!is.numeric(x)) {
    stop("`x` needs to be numeric")
  }
  return(x^2)
}
```

Handling input types

Functional programming handles different input types using control flow. The same code is ran regardless of object type.

```
square <- function(x) {
  if(!is.numeric(x)) {
    stop("`x` needs to be numeric")
  }
  return(x^2)
}
```

Later in the semester...

We will see object-oriented programming, which handles different input types using different functions (methods)!

What are functions?

A function is comprised of three components:

- The arguments/inputs (`formals()`)
- The body/code (`body()`)
- The environment (`environment()`)

What are functions?

A function is comprised of three components:

- The arguments/inputs (`formals()`)
- The body/code (`body()`)
- The environment (`environment()`)

Your turn!

Use these functions to take a closer look at `square()`.

Try modifying the function's formals/body/env with `<-`.

Functional programming

Since functions are like any other object, they can also be:

- **inputs** to functions

Extensible design with function inputs

Using function inputs can improve your package's design!

Rather than limiting users to a few specific methods, allow them to use and write any method with functions.

Function arguments

Consider a function which calculates accuracy measures:

```
accuracy <- function(e, measure, ...) {
  if (measure == "mae") {
    mean(abs(e), ...)
  } else if (measure == "rmse") {
    sqrt(mean(e^2, ...))
  } else {
    stop("Unknown accuracy measure")
  }
}
```

Improving the design

This function is limited to only computing MAE and RMSE.

Function arguments

Using function operators allows any measure to be used.

```
MAE <- function(e, ...) mean(abs(e), ...)
RMSE <- function(e, ...) sqrt(mean(e^2, ...))
accuracy <- function(e, measure, ...) {
  ???
}
accuracy(rnorm(100), measure = RMSE)
```

Your turn!

Complete the accuracy function to calculate accuracy statistics based on the function passed in to `measure`.

Functional programming

Since functions are like any other object, they can also be:

- **inputs** to functions
- **outputs** of functions

Functions making functions?

These functions are known as *function factories*.

Where have you seen a function that creates a function?

Function factories

Let's generalise `square()` to raise numbers to any power.

```
power <- function(x, exp) {
  x^exp
}
power(8, exp = 2)
```

```
[1] 64
```

```
power(8, exp = 3)
```

```
[1] 512
```

Starting a factory

What if the function returned a function instead?

Function factories

```r
power_factory <- function(exp) {
  function(x) {
    x^exp
  }
}
square <- power_factory(exp = 2)
square(8)
```

```
[1] 64
```

```r
cube <- power_factory(exp = 3)
cube(8)
```

```
[1] 512
```

Function factories

Consider this function to calculate plot breakpoints of vectors.

```
breakpoints <- function(x, n.breaks) {
  seq(min(x), max(x), length.out = n.breaks)
}
```

Your turn!

Convert this function into a function factory.

Is it better to create functions via `x` or `n.breaks`?

Outline

1 Programming paradigms

2 Functional programming

3 Functional problem solving

Split, apply, combine

Many problems can be simplified/solved using this process:

- split (break the problem into smaller parts)
- apply (solve the smaller problems)
- combine (join solved parts to solve original problem)

Split, apply, combine

Many problems can be simplified/solved using this process:

- split (break the problem into smaller parts)
- apply (solve the smaller problems)
- combine (join solved parts to solve original problem)

This technique applies to both

- writing functions (rewriting a function into sub-functions)
- working with data (same function across groups or files)

data |> group_by() |> summarise()

An example of split-apply-combine being used to work with data is when `group_by()` and `summarise()` are used together.

data |> group_by() |> summarise()

An example of split-apply-combine being used to work with data is when `group_by()` and `summarise()` are used together.

- split: `group_by()` splits up the data into groups
- apply: your `summarise()` code calculates a single value
- combine: `summarise()` combines the results into a vector

data |> group_by() |> summarise()

```r
library(dplyr)
mtcars |>
  group_by(cyl) |>
  summarise(mean(mpg))
```

```
# A tibble: 3 × 2
    cyl `mean(mpg)`
  <dbl>       <dbl>
1     4        26.7
2     6        19.7
3     8        15.1
```

Split-apply-combine for vectors and lists

The same idea can be used for calculations on vectors.

Split-apply-combine for vectors and lists

The same idea can be used for calculations on vectors.

There are two main implementations we consider:

- base R: The `*apply()` functions
- purrr: The `map*()` functions

Split-apply-combine for vectors and lists

The same idea can be used for calculations on vectors.

There are two main implementations we consider:

- base R: The `*apply()` functions
- purrr: The `map*()` functions

We will use purrr and but I'll also share the base R equivalent.

for or map?

Let's `square()` a vector of numbers with a for loop.

```
x <- c(1, 3, 8)
x2 <- numeric(length(x))
for (i in seq_along(x)) {
  x2[i] <- square(x[i])
}
x2
```

```
[1]  1  9 64
```

for or map?

Let's `square()` a vector of numbers with a for loop.

```
x <- c(1, 3, 8)
x2 <- numeric(length(x))
for (i in seq_along(x)) {
  x2[i] <- square(x[i])
}
x2
```

```
[1]  1  9 64
```

Of course `square()` is vectorised, so we should use `square(x)`. Other functions like `lm()` and `read.csv()` are not!

for or map?

Instead using `map()` we get...

```r
library(purrr)
x <- c(1, 3, 8)
map(x, square) # lapply(x, square)
```

```
[[1]]
[1] 1

[[2]]
[1] 9

[[3]]
[1] 64
```

Mapping vectors

The same result, but it has been combined differently!

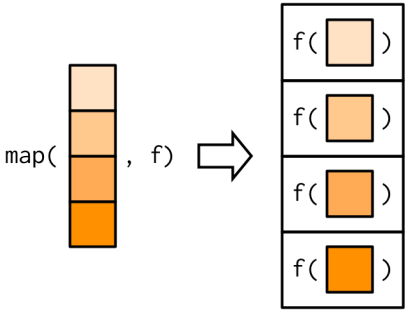

Mapping vectors

To combine the results into a vector rather than a list, we instead use `map_vec()` to combine results into a vector.

```
library(purrr)
x <- c(1, 3, 8)
map_vec(x, square) # vapply(x, square, numeric(1L))
```

```
[1]  1  9 64
```

for or map

Advantages of map

- Less coding (less bugs!)
- Easier to read and understand.
- Easy to parallelise

for or map

Advantages of map

- Less coding (less bugs!)
- Easier to read and understand.
- Easy to parallelise

Disadvantages of map

- Less control over loop
- Cannot solve sequential problems

Functional mapping

Recall `group_by()` and `summarise()` from dplyr:

```
mtcars |>
  group_by(cyl) |>
  summarise(mean(mpg))
```

Your turn!

Use `split()` and `map_vec()` to achieve a similar result.

Hint: `split(mtcars$mpg, mtcars$cyl)` creates a list that splits `mtcars$mpg` by each value of `mtcars$cyl`.

Anonymous mapper functions

Suppose we want to separately model `mpg` for each `cyl`.

```
lm(mpg ~ disp + hp + drat + wt, mtcars[mtcars$cyl == 4,])
lm(mpg ~ disp + hp + drat + wt, mtcars[mtcars$cyl == 6,])
lm(mpg ~ disp + hp + drat + wt, mtcars[mtcars$cyl == 8,])
```

Anonymous mapper functions

We can split the data by `cyl` with `split()`,

```
mtcars_cyl <- split(mtcars, mtcars$cyl)
```

but `map(mtcars_cyl, lm, mpg ~ disp + hp + drat + wt)` won't work - why?

Anonymous mapper functions

We can split the data by `cyl` with `split()`,

```
mtcars_cyl <- split(mtcars, mtcars$cyl)
```

but `map(mtcars_cyl, lm, mpg ~ disp + hp + drat + wt)` won't work - why?

! Difficult to map

Using `map(mtcars_cyl, lm)` will apply `lm(mtcars_cyl[i])`.

The mapped vector is always used as the first argument!

Anonymous mapper functions

We can write our own functions!

```r
mtcars_lm <- function(.) lm(mpg ~ disp + hp + drat + wt, data = .)
map(mtcars_cyl, mtcars_lm)
```

```
$`4`

Call:
lm(formula = mpg ~ disp + hp + drat + wt, data = .)

Coefficients:
(Intercept)         disp           hp         drat           wt
    52.5195      -0.0629      -0.0760      -1.4422      -3.1001
```

```
$`6`

Call:
lm(formula = mpg ~ disp + hp + drat + wt, data = .)

Coefficients:
(Intercept)         disp           hp         drat           wt
   15.12328      0.04363      0.00252      2.43188     -3.98026



$`8`

Call:
lm(formula = mpg ~ disp + hp + drat + wt, data = .)
```

```
Coefficients:
(Intercept)         disp           hp         drat           wt
   2.68e+01     6.59e-05    -1.35e-02    -4.53e-02    -2.19e+00
```

Anonymous mapper functions

Or use `~ body` to create anonymous functions.

```
# lapply(mtcars_cyl, \(.) lm(mpg ~ disp + hp + drat + wt, data = .))
map(mtcars_cyl, ~ lm(mpg ~ disp + hp + drat + wt, data = .))
```

```
$`4`

Call:
lm(formula = mpg ~ disp + hp + drat + wt, data = .)

Coefficients:
(Intercept)         disp           hp         drat           wt
    52.5195      -0.0629      -0.0760      -1.4422      -3.1001
```

```
$`6`

Call:
lm(formula = mpg ~ disp + hp + drat + wt, data = .)

Coefficients:
(Intercept)         disp           hp         drat           wt
   15.12328      0.04363      0.00252      2.43188     -3.98026



$`8`

Call:
lm(formula = mpg ~ disp + hp + drat + wt, data = .)
```

```
Coefficients:
(Intercept)         disp           hp         drat           wt
   2.68e+01     6.59e-05    -1.35e-02    -4.53e-02    -2.19e+00
```

Mapping mapping mapping

How would you then get the coefficients from all 3 models?

```
# mtcars_cyl |> lapply(\(.) lm(mpg ~ disp + hp + drat + wt, data = .))
mtcars_cyl |>
  map(~ lm(mpg ~ disp + hp + drat + wt, data = .))
```

Mapping mapping mapping

```r
# lapply(mtcars_cyl, \(.) lm(mpg ~ disp + hp + drat + wt, data = .) |>
coef())
mtcars_cyl |>
  map(~ lm(mpg ~ disp + hp + drat + wt, data = .)) |>
  map(coef)
```

```
$`4`
(Intercept)        disp          hp        drat          wt
    52.5195     -0.0629     -0.0760     -1.4422     -3.1001

$`6`
(Intercept)        disp          hp        drat          wt
   15.12328     0.04363     0.00252     2.43188    -3.98026
```

```
$`8`
(Intercept)        disp          hp        drat          wt
   2.68e+01    6.59e-05   -1.35e-02   -4.53e-02   -2.19e+00
```

Mapping arguments

Any arguments after your function are passed to all functions.

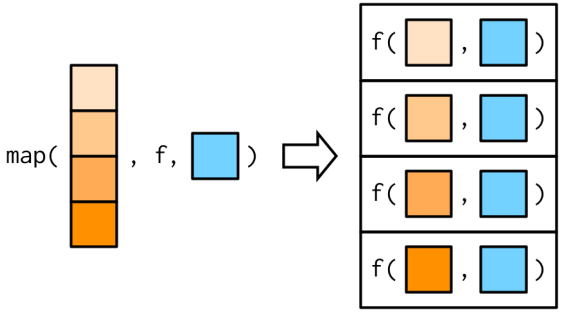

Mapping arguments

This works by passing through `...` to the function.

```
x <- list(1:5, c(1:10, NA))
map_dbl(x, ~ mean(.x, na.rm = TRUE))
```

```
[1] 3.0 5.5
```

```
map_dbl(x, mean, na.rm = TRUE)
```

```
[1] 3.0 5.5
```

Mapping arguments

These additional arguments are not decomposed / mapped.

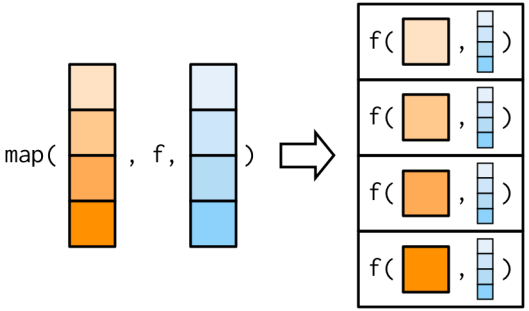

Mapping multiple arguments

It is often useful to map multiple arguments.

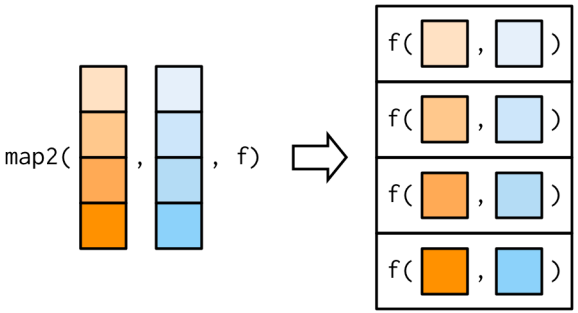

Mapping multiple arguments

```r
xs <- map(1:8, ~ ifelse(runif(10) > 0.8, NA, runif(10)))
map_vec(xs, mean, na.rm = TRUE)
```

```
[1] 0.461 0.433 0.674 0.424 0.428 0.576 0.505 0.430
```

Mapping multiple arguments

```r
xs <- map(1:8, ~ ifelse(runif(10) > 0.8, NA, runif(10)))
map_vec(xs, mean, na.rm = TRUE)
```

```
[1] 0.461 0.433 0.674 0.424 0.428 0.576 0.505 0.430
```

```r
ws <- map(1:8, ~ rpois(10, 5) + 1)
map2_vec(xs, ws, weighted.mean, na.rm = TRUE)
```

```
[1] 0.375 0.445 0.705 0.358 0.489 0.559 0.538 0.494
```

Mapping multiple arguments

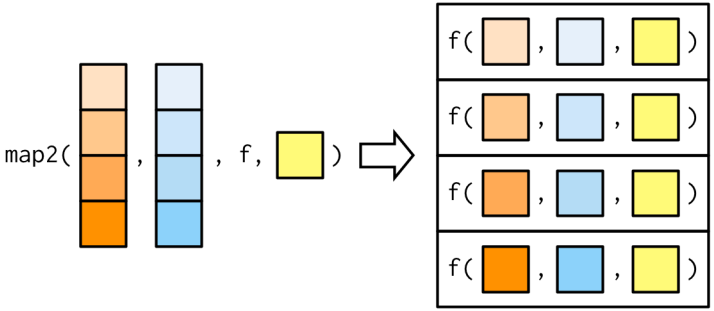

Mapping many arguments

It is also possible to map any number of inputs with `pmap`.

```
n <- 1:3
min <- c(0, 10, 100)
max <- c(1, 100, 1000)
pmap(list(n, min, max), runif) # .mapply(runif, list(n, min, max),
list())
```

```
[[1]]
[1] 0.893

[[2]]
[1] 37.2 60.0
```

```
[[3]]
[1] 780 961 959
```

Mapping many arguments

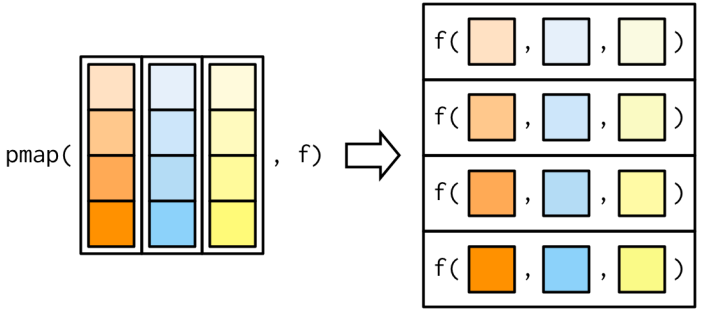

Parallel mapping

Split-apply-combine problems are *embarrassingly parallel*.

Parallel mapping

Split-apply-combine problems are *embarrassingly parallel*.

The furrr package (future + purrr) makes it easy to use `map()` in parallel, providing `future_map()` variants.

```
library(furrr)
plan(multisession, workers = 4)
future_map_dbl(xs, mean, na.rm = TRUE)
```

```
[1] 0.461 0.433 0.674 0.424 0.428 0.576 0.505 0.430
```

```
future_map2_dbl(xs, ws, weighted.mean, na.rm = TRUE)
```

```
[1] 0.375 0.445 0.705 0.358 0.489 0.559 0.538 0.494
```

Reduce vectors to single values

Sometimes you want to collapse a vector, reducing it to a single value. `reduce()` always returns a vector of length 1.

```
x <- sample(1:100, 10)
x
```

```
 [1]  88  70  89  95  22  43  16   6 100  38
```

```
sum(x)
```

```
[1] 567
```

```
# Alternative to sum()
reduce(x, `+`) # Reduce(`+`, x)
```

```
[1] 567
```

Reduce vectors to single values

The result from the function is re-used as the first argument.

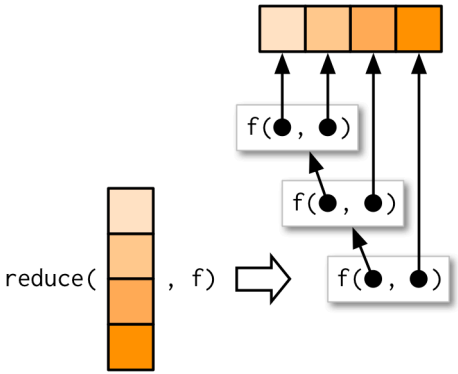

Reduce vectors to single values

Your turn!

We're studying the letters in 3 bowls of alphabet soup.

Use `reduce()` to find the letters that were in all bowls of soup!

Are all letters found in the soups?

Reduce vectors to single values

```
alphabet_soup <- map(c(10,24,13), sample, x=letters, replace=TRUE)
alphabet_soup
```

```
[[1]]
 [1] "m" "k" "r" "l" "c" "s" "f" "j" "g" "r"

[[2]]
 [1] "h" "w" "d" "a" "d" "j" "c" "q" "n" "i" "q" "t" "m" "x" "z" "z"
"k"
[18] "r" "k" "u" "c" "t" "k" "u"

[[3]]
 [1] "w" "t" "h" "m" "j" "h" "v" "r" "l" "t" "v" "v" "r"
```

Functional adverbs

purrr also offers many *adverbs*, which modify a function.

Capturing conditions

- `possibly(.f, otherwise)`: If the function errors, it will return `otherwise` instead.
- `safely(.f)`: The function now returns a list with ‘result’ and ‘error’, preventing errors.
- `quietly(.f)`: Any conditions (messages, warnings, printed output) are now captured into a list.

Functional adverbs

purrr also offers many *adverbs*, which modify a function.

Changing results

- `negate(.f)` will return `!result`.

Chaining functions

- `compose(...)` will chain functions together like a chain of piped functions.