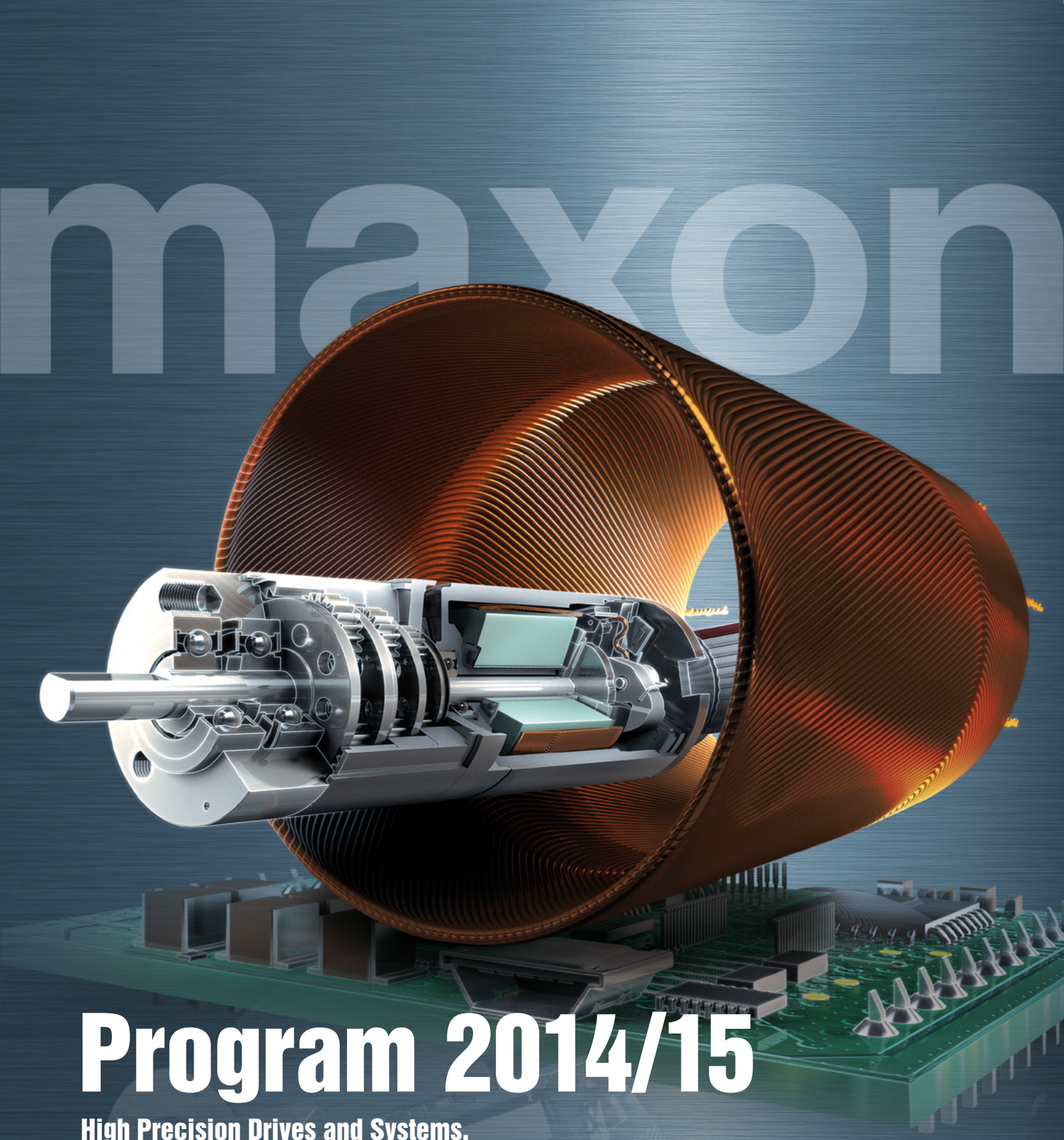

Program 2014/15

High Precision Drives and Systems.

www.maxonmotor.com

maxon motor

driven by precision

View the entire range of products online

www.maxonmotor.com

New products

maxon motor

NEW DCX 10 S, configurable 58
NEW DCX 16 S, configurable 60
NEW DCX 22 L, configurable 62
NEW DCX 32 L, configurable 63

NEW RE 40, EB, 25 Watt 113

NEW EC 6, 1.5 Watt 170
NEW EC 6, 2 Watt 171
NEW EC 19, 60 Watt 182
NEW EC 19, 120 Watt 183
NEW EC 19, 120 Watt, sterilizable 184

maxon gear

NEW GPX 16, configurable 67
NEW GPX 22, configurable 68
NEW GPX 32, configurable 70
NEW GP 19 M, sterilizable 258
NEW GP 22 AR 263

maxon spindle drive

NEW GP 6 S, Ceramic Version 293

maxon sensor

NEW Encoder MILE for EC 45 flat 308
NEW Encoder 16 EASY 311
NEW Encoder 8 OPT 321
NEW Encoder SCH16F 322
NEW Encoder 2RMHF 323

maxon motor control

NEW ESCON Module 50/4 EC-S 343
NEW MAXPOS 50/5 358

maxon selection guide

Get an overview of the extensive range of DC brushed and brushless motors, drives, encoders, control electronics, and the variety of possible combinations. Make a preliminary selection based on the power and size, commutation, or bearings.

Quickly find what you're looking for, including sterilizable drives for use under special ambient conditions or drives with integrated electronics.

Accessories overview

Easily find the accessories you need for connecting maxon DC motors to maxon controllers.

Welcome to maxon motor 4–19

maxon selection guide 21–25

Accessories overview 26

Table of Contents 28–29

Technology – short and to the point 30–50
Facts
Calculations

Contact information 390–393

maxon X drives 51–76
These DC motors, gearheads, and encoders can be configured online.

maxon DC motor 77–166
Brushed DC motors with ironless winding.

maxon EC motor (BLDC) 167–237
Brushless DC motors with ironless winding and flat motors with iron core winding.

maxon gear 239–290
Precision planetary and spur gearheads.

maxon spindle drive 291–305
Compact spindle drives with steel or ceramic spindles.

maxon sensor 307–337
Magnetic, optical, and inductive encoders, DC tachometers, and resolvers.

maxon motor control 339–363
4-Q PWM servo controllers, 1-Q-EC amplifiers, and positioning controllers.

maxon compact drive 365–368
Motor, sensors and controller as a compact drive for decentralized applications.

maxon accessories 369–377
Brakes and end caps.

maxon ceramic 379–389
Custom ceramic components and standard components such as ceramic axles, shafts, or spindles.

Born in Switzerland. Grown into the World.

maxon – a strong global brand.

maxon motor, with headquarters in Sachseln/Switzerland, has more than 2020 employees worldwide and, in addition to production sites in Switzerland, Germany, Hungary and Korea, has sales companies in more than 30 countries. The production sites are state-of-the-art with around 1150 employees in Central Switzerland, 400 in Sexau, Germany, 220 in Veszprém, Hungary, and 18 in Korea. We produce all important components of our drive systems on machines and production lines that we have largely developed ourselves. This guarantees not only economical manufacturing of large series, but also highest flexibility for handling special requirements or smaller quantities.

Driven by precision.

maxon motor is the worldwide leading provider of high-precision drives and systems up to 500 W. We develop and produce brushless and brushed DC motors with the unique ironless maxon winding. Flat motors with iron cores supplement the modular product range. The modular system also includes: planetary, spur and special gearheads, spindle drives, as well as encoders and control electronics. High-tech CIM and MIM components are manufactured in a special competence center. maxon motor stands for the highest level of quality, innovation, competitive pricing, and a worldwide distribution network. But what matters most is the quality of the customer-specific solution that we create with you and for you.

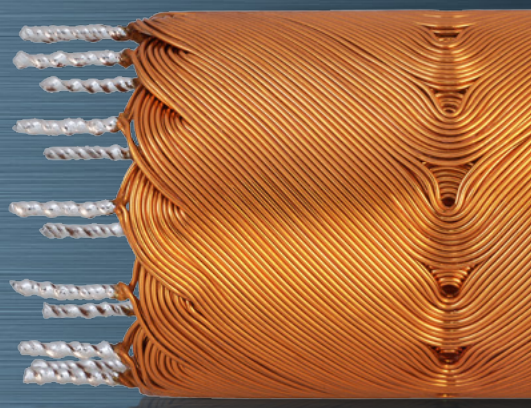

We are striving to get even closer to the 100%.

Dear Valued Customers

You expect much from our drive systems – a challenge that we gladly accept. Therefore we are constantly investing our entire know-how into making the products of maxon motor even better. A maxon DC motor already achieves an efficiency of more than 90%. We are giving our all to get even closer to the 100%.

This does not only apply to our products, but also to our service: We take pride in developing a large share of our drive solutions hand-in-hand with you, our customers. We continuously strive to make it even easier for you to select your custom drive. With this in mind, this year we have added additional products to the range of configurable maxon X drives. Configure your drive online now at dcx.maxonmotor.com

Eugen Elmiger
CEO

maxon motor

driven by precision

Communication

Television- and aerial view cameras
Professional cameras
Digital recording systems
Projectors
Theater and concert lighting
Advertising displays
Bar code readers
Antenna adjustment systems

Robotics

Humanoid robots
Inspection robots
Microrobotic systems
Teleoperations robots
Educational robots
Household robots
Space robots

Security technology

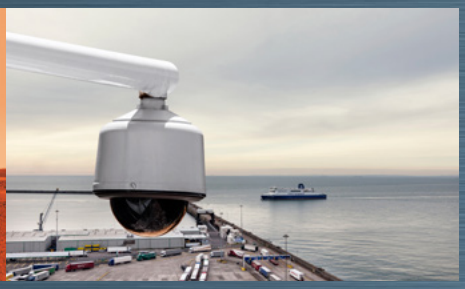

Surveillance cameras
Access and lock systems
Card readers
Mobile inspection systems
Automated gates
Scanning systems
Respirators

Automotive

Gasoline and fuel injection pumps
Air conditioning
Adjustable shock absorbers
Power steering
Electronic tachographs
Distance measurement systems
Fuel cell vehicles

Aerospace

Brake flap adjustment
Seat and display adjustment
Flight recorders
Solar sail adjustment
Radar systems
Luggage hatch equipment
Autopilots

Consumer Applications

Motorized golf caddies
Gambling machines
Vacuum cleaner robots
Model airplanes and trains
Bicycles
Coffee machines
High-end modeling

If maxon is inside, the best is inside.

maxon drives set the world in motion.

Precision drives from maxon motor are in operation in a wide number of industries. The most famous example comes from astronautics: NASA's Mars rovers prove that maxon drives can perform their work with absolute reliability, even under the harshest conditions. It then should come as no surprise that the high-precision drive systems from maxon motor are in widespread use on Earth.

These can be found for example in cellular phone, ship and aircraft antennas, where they ensure trouble-free communication, in eye surgery devices, where they help to correct defective vision, in catalytic converters, where they contribute to reducing environmental pollution, and in modern assembly robots, where they help accelerate the industrial production.

This makes maxon drives as multifaceted as their applications.

Medical science

Insulin pumps
Apnea devices
Prostheses
Ophthalmosurgical devices
Power tools
Radiation equipment
Surgical robots

Industrial Automation

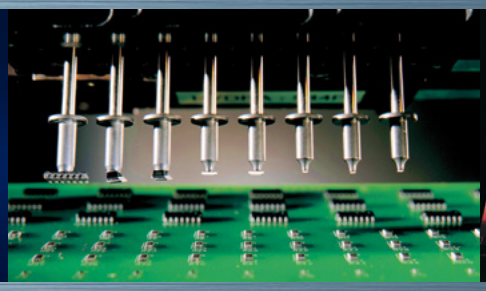

PCB mounting systems
Lithography systems
Electric discharge machines
Welding equipment
Packing machines
Printing equipment
Weaving machines

Instrumentation & Inspection

Laser leveling systems
Microscopes
Calipers
Particle measuring equipment
Calibration systems
Precision scales
Weather and climate analyzers
Astrophysics

maxon motor

driven by precision

We do not have only one solution. But we are sure to have one that fits.

Optimal complete solution thanks to a diverse product portfolio and experienced customer service.

To ensure that you also find the best possible drive solution for your application, our highly-qualified sales engineers will assist you. This involvement does not stop after the delivery. Instead, we offer comprehensive service during the entire lifetime of your maxon motor products.

Great choice, easy ordering.

maxon's product range of motors and combinations is unique around the world. Its modular system and numerous winding options are crucial for this range of variations. We have divided our products into four program groups to help guarantee our customers the shortest delivery times.

Stock program
The market-oriented selection from our extensive product portfolio offers you short delivery times.

Standard program
In the comprehensive standard program, products are included which can be produced and delivered in a short time. The plenitude of versions in this program offer tried and tested standard products for optimized application.

Special program
A wide range of motors and combinations is available on request.

The maxon modular system.

maxon's motors, gearheads, encoders, brakes and controllers are all perfectly compatible and offer an almost unending number of possible combinations. The maxon modular system always gives you the ideal combination for the required application. The maxon modular system shows you all standard combinations and helps you to select the appropriate components for your drive. Up to 49 units can also be ordered directly from our online catalog.
www.maxonmotor.com

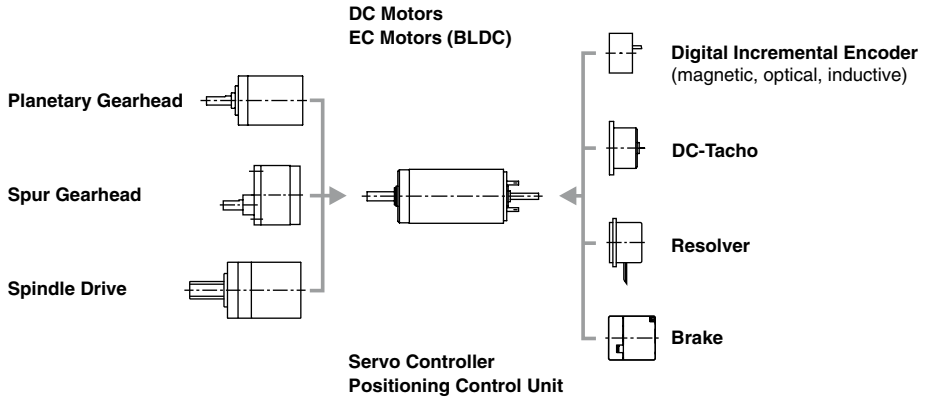

Adapted to the application.

Simple and uncomplicated – we can modify the shaft and flange, bearings and the electric connections. We are also able to meet special requirements, such as a hollow shaft, special lubrication or special windings. Our new maxon X drives can also be configured and ordered online. Automatic processes guarantee fast delivery directly from the series production facilities.
dcx.maxonmotor.com

Shaft
Length
Diameter
Surface
Cross bore

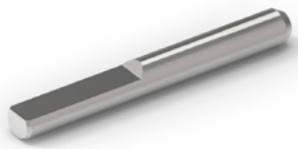

Winding
Nominal voltage
Temperature range

Storage
Ball bearing
Sleeve bearing
Lubrication

Electrical connection
Terminals or cables
Cable length
Connection alignment
Connector

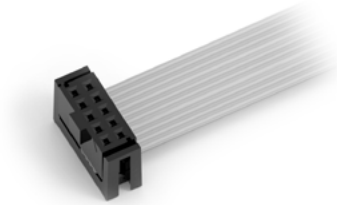

Flange
Centering collar
Pitch circle
Thread

Output component
Pinion
Pulley

Designed based on the requirements.

maxon special design.

Custom-made to meet requirements, such as shock or temperature resistance, or a special configuration. Our project process, with clearly defined milestones, ensure transparency and result in drive solutions that fit.

Knowledge
maxon motor develops customized gearhead and drive solutions that reflect the market as closely as possible – from simple gearhead solutions to complex mechatronic drive units. The tried-and-tested expertise gained from the maxon standard products is also consistently applied to the special solutions.

Experience
Thorough application knowledge from many reference projects helps maxon motor come up with the right answers. We develop intelligent drive solutions at the highest level by working closely with customers.

Service
We are driven by your needs and requirements. You not only have access to our worldwide distribution and service network, but also to qualified personnel who have a personal interest in seeing you reach your goals.

Small
Ceramic carriage for precise linear movements – precise to a few µm. All-in-one unit with brushless DC motor, planetary gearhead and inductive encoder.
Dimensions: 44 x 12 x 12 mm.

Compact
The increasing miniaturization requires the highest level of functionality in the smallest of spaces. Parts manufactured with MIM technology can be mass-produced economically.
Gearhead Ø10 mm.

Precise
Only high-precision drive solutions can provide the micro-mechanical movements of today's machines. This is a must for diverse areas of application.
Motor Ø13 mm.

Free of backlash
The backlash-free unit of motor and worm gear withstands the highest cyclic demands. Increased service life due to maintenance-free drive solution. Positioning accuracy precise to 6°. Available width: 25 mm.

Efficient
Electrical hand tools in the fields of medical and dental technology require minimal heat development and low noise. These requirements put high demands on the drive solutions. Efficiency >90 %.

Robust
The motors are operated at an ambient temperature of –66 °C to +85 °C. The drive system has been designed to withstand high vibrations and impacts.

Worm gear
Multi-stage gearhead with output shaft in worm design. Lightweight, reliable and cost-optimized unit with Ø15 mm motor.

Linear drive
A compact reversing gear with threaded spindle mounted free of axial play transmits the movement to the desired location.

Hollow shaft
Gearheads and motors with hollow shafts allow two speeds at the same location, or can let through different media, such as air, vacuum or light.

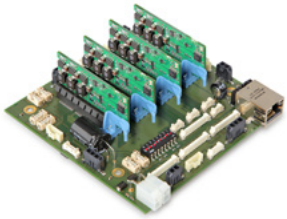

Multi-axis system
Several axes have to be adjusted synchronously within a very small space. Modular controllers adapt to the environment.
Motherboard, multi-axis system: 110 x 110 mm.

Torque density
Sophisticated combinations of motors and mechanical mounting equipment using MIM technology ensure high reliability and top torque density for safety engineering applications.

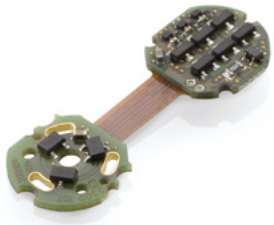

Integrated controller
In addition to fitting into very small spaces and meeting high safety requirements, this folding printed circuit board also withstands high temperatures.
For Ø22 mm motor.

maxon resources.

Close proximity to the processes, thanks to in-house production.

It is only possible to manufacture high-precision components and subassemblies that are perfectly matched to each other if the production processes have been completely mastered. The high production quality reflects maxon motor's many years of experience. maxon motor also leads the way when it comes to new production processes.

Development / project management

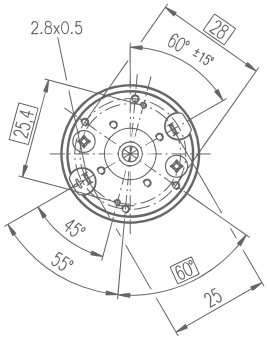

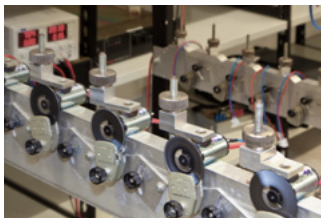

Test laboratory

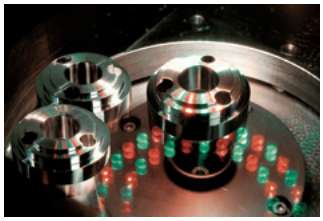

Winding technology

Quality management

Series production: Plastic

Automatic assembly

CIM/MIM

Machining

Microtechnology

Notes on the catalog.

Disclaimer

maxon motor ag does not accept liability for the correctness of this documentation. maxon motor ag is not liable for direct or indirect damage resulting from using this documentation. This exclusion of liability does not apply in the event of willful intent, negligence or liability under the applicable product liability act.

SN EN ISO 9001:2008

SN EN ISO 9001 specifies the requirements to a quality management system (process approach) that an organization have to meet in order to provide products and services that meet the customer expectations as well as comply with the applicable regulatory requirements. Simultaneously, the management system has to be subject to continuous improvement.

EN 9100:2009 (corresponds to AS 9100)

This is an internationally accepted quality standard of the aerospace industry. It obliges companies and employees to reduce potential risks in the aerospace industry to a minimum by structuring the design and manufacturing processes accordingly. At maxon motor, this standard is applied for customer-specific products on request – except for A-max motors, RE-max motors and controllers.

The EN 9100 standard builds on the SN EN ISO 9001 standard.
EN 9100 certification includes SN EN ISO 9001 certification.

EN 9100
ISO 9001

SN EN ISO 13485:2003

Is an internationally accepted quality norm for medical products that requires management and staff to ensure that the design and manufacture of medical products minimize potential risks for patients. The traceability of processes and raw materials must also be guaranteed. At maxon motor, this standard is applied for customer-specific products on request (Ø10 mm drives).

SN EN ISO 14001:2004

Is an internationally accepted quality norm for environmental management systems (EMS). It covers environmental-relevant processes and procedures in a company, requiring a company's management and employees to adopt environmentally-compatible behavior and constantly seek to improve its procedures and documentation.

CE marking.

Under the applicable EU directives, maxon products are not subject to the CE marking obligation. They therefore do not carry a CE marking.

Drives and drive components (motors, gearheads, motor/gearhead combinations, encoders and controllers) do not fall under EU directive 2006/42/EC (also called EU Machinery Directive). **Drive systems** (systems consisting of positioning or servo controllers and motor) are considered partly completed machinery in accordance with 2006/42/EC, which are intended to be incorporated into or assembled with other machinery or other partly completed machinery.

maxon products have been designed for incorporation into end devices and are not subject to directive 2004/108/EC (also called EMC directive). The components may only be installed by a qualified person and the manufacturer of the end device has to ensure that the end device in its entirety fulfills the EMC directive.

Directives of the European Union.

maxon motor confirms compliance with the following directives of the European Union. Exceptions are described on the respective product pages.

1907/2006/EU REACH
2002/96/EU WEEE
2008/98/EU Waste Framework Directive
2011/65/EU RoHS

BUREAU VERITAS
Certification

Certificate

maxon motor

driven by precision

maxon motor ag
Brünigstrasse 220
CH-6072 Sachseln

EN 9100:2009

Quality management.

Only performance counts.

Drives manufactured by maxon motor can be absolutely relied on even under the most difficult conditions – they have for example been in use on Mars for years. But maxon DC motors do not only do their job in space, they also function in tough conditions on and deep below the surface of the Earth – flawlessly and efficiently.

At maxon motor, quality is not a matter of course, but instead the result of many years of experience and a continuous improvement process. Quality is tradition at maxon: The company received ISO 9001 certification in Switzerland as early as 1988.

The quality management system of maxon motor is an integral part of the overall management system. The operational and organizational structures, the powers and responsibilities, as well as the process and procedure assessments are documented for all employees. The quality management system is enacted, maintained and periodically verified. Since 18.9.1991, Bureau Veritas is responsible for the verification.

Overview of the maxon certifications.

	maxon motor Sachseln	maxon medical Sachseln	maxon motor Sexau	maxon motor Hungary	maxon motor Korea
ISO 13485		■			
EN 9100	■		■		
ISO 9001	■	■	■	■	■
ISO 14001	■	■	■	■	■

www.maxonmotor.com

Visit us online and discover the digital maxon world.

On our website, you can find general news and information on our products and services, as well as an integrated online catalog (e-shop), the selection program and the maxon online configurator.

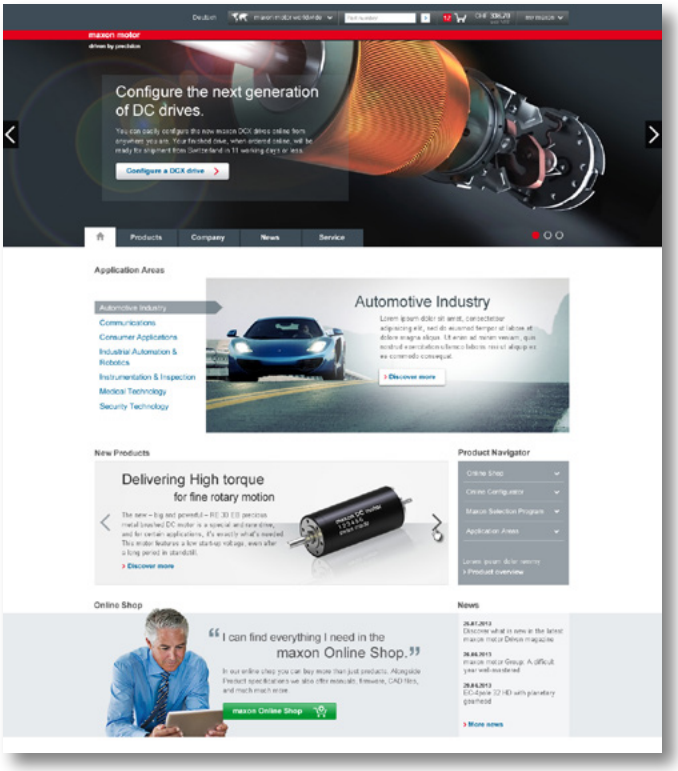

maxon online shop

maxon online catalog

In the maxon online catalog, we provide a complete overview of all maxon products. Here you can order motors, gearheads, sensors and electronics online. Additionally, you can download data on all maxon products in the online catalog.

maxon selection program

maxon selection program

Find the right drive by entering just a few parameters, such as supply voltage and torque. After you have entered the requirements of your drive, the maxon selection program shows the possible solution combinations from the maxon product program.

maxon online configurator

online configurator

Configure and combine motors (DCX), gearheads (GPX) and encoders (ENX) according to your individual requirements. Fast, easy and online. We guide you step-by-step through the various functionalities in the configurator.

“driven” – the maxon motor magazine.

Exciting applications from the field of drive technology, interviews with experts or tips for the correct drive selection. In “driven”, maxon motor’s magazine, a wide range of topics are covered. The magazine appears three times a year and is available for the iPad and Android tablet PCs. At the end of each year, the highlights from the three tablet issues will be compiled in a print edition.

Download

The maxon motor magazine “driven” is available for free as a download from the Apple App Store and Google Play. For more information, refer to: magazine.maxonmotor.com

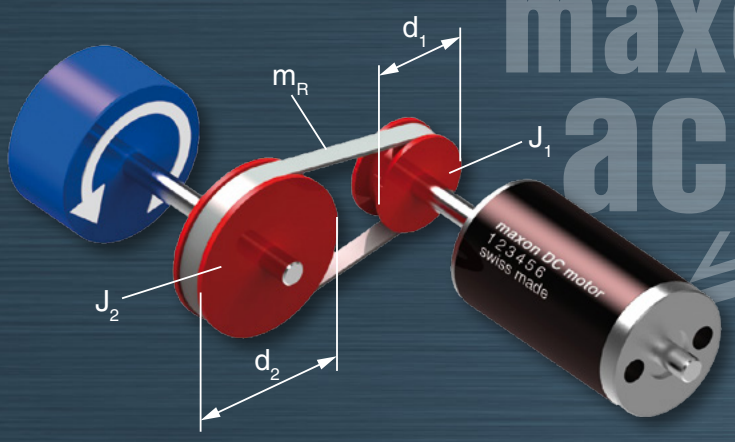

$$M_{in,\alpha} = \left(J_{in} + J_1 + \frac{J_2}{\eta} \cdot \frac{d_1^2}{d_2^2} + \frac{J_X}{\eta} \cdot \frac{d_1^2}{d_X^2} + \frac{m_L + m_B}{\eta} \cdot \frac{d_1^2}{4} \right) \cdot \frac{\pi}{30} \cdot \frac{\Delta n_{in}}{\Delta t_a}$$

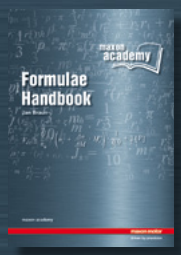

maxon Formula Compendium.

Formulae, terms and explanations for all types of calculations concerning drive systems. Detailed collection with illustrations and descriptions. Flow chart for targeted drive selection.
(Author: Dipl. Ing. Jan Braun, edition)

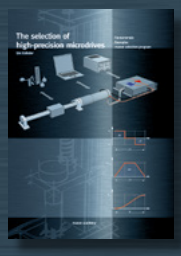

The selection of high-precision microdrives.

Step by step from the specific formulation of the drive problem to its solution. Numerous tips and explanations, focusing only on theory where required for greater understanding. Various examples of applications deal with the practical aspects of drive technology.
(Author: Dr. Urs Kafader, 149 pages, ISBN 978-3-9523654-5-8)

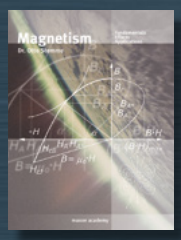

Magnetism.

Principles, definitions and theory on magnetism, magnetic circuits and magnetisation procedures. In-depth handling of drive technology-related magnetic forces. Explanations on magnetic field sensors and natural magnetic fields.
(Author: Dr. Otto Stemme, 182 pages, ISBN 978-3-9520143-5-6)

academy.maxonmotor.com

Increase your knowledge of drive technology and motion control.

Learn more about the interaction of drive components, namely motor, gears, sensors and controllers. maxon academy brings together maxon products to provide ongoing education on drive technology. In addition to the maxon academy books and brochures, you will find here E-learning modules, the currently planned seminars on drive technology and motion control as well as teaching material. These range from presentation and sample motors that can be taken apart for student exercises to models for hands-on training with suggestions for practical work.

maxon motor

driven by precision

maxon selection guide

Classification of the maxon ranges according to performance classes. Performance, also in conjunction with size, is frequently a central requirement when considering drive systems. A preliminary size-related selection can be made from the different product ranges with the maxon selection guide. Our data sheets provide detailed characteristics related to individual motors. Should you need any additional information, simply call us!

Selection Guide

maxon gear / maxon sensor

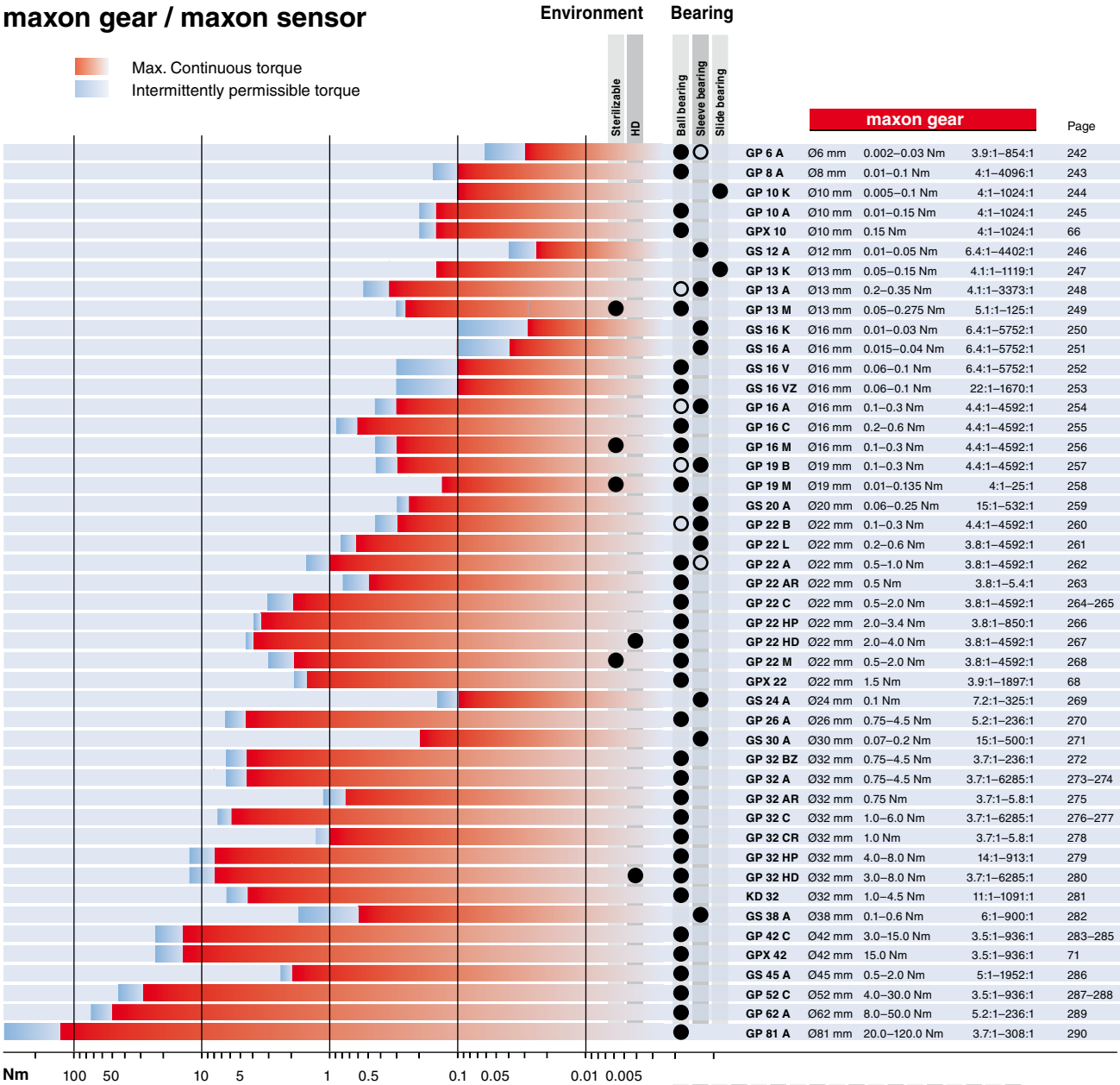

maxon gear				Page
GP 6 A	Ø6 mm	0.002–0.03 Nm	3.9:1–854:1	242
GP 8 A	Ø8 mm	0.01–0.1 Nm	4:1–4096:1	243
GP 10 K	Ø10 mm	0.005–0.1 Nm	4:1–1024:1	244
GP 10 A	Ø10 mm	0.01–0.15 Nm	4:1–1024:1	245
GPX 10	Ø10 mm	0.15 Nm	4:1–1024:1	66
GS 12 A	Ø12 mm	0.01–0.05 Nm	6.4:1–4402:1	246
GP 13 K	Ø13 mm	0.05–0.15 Nm	4.1:1–1119:1	247
GP 13 A	Ø13 mm	0.2–0.35 Nm	4.1:1–3373:1	248
GP 13 M	Ø13 mm	0.05–0.275 Nm	5.1:1–125:1	249
GS 16 K	Ø16 mm	0.01–0.03 Nm	6.4:1–5752:1	250
GS 16 A	Ø16 mm	0.015–0.04 Nm	6.4:1–5752:1	251
GS 16 V	Ø16 mm	0.06–0.1 Nm	6.4:1–5752:1	252
GS 16 VZ	Ø16 mm	0.06–0.1 Nm	22:1–1670:1	253
GP 16 A	Ø16 mm	0.1–0.3 Nm	4.4:1–4592:1	254
GP 16 C	Ø16 mm	0.2–0.6 Nm	4.4:1–4592:1	255
GP 16 M	Ø16 mm	0.1–0.3 Nm	4.4:1–4592:1	256
GP 19 B	Ø19 mm	0.1–0.3 Nm	4.4:1–4592:1	257
GP 19 M	Ø19 mm	0.01–0.135 Nm	4:1–25:1	258
GS 20 A	Ø20 mm	0.06–0.25 Nm	15:1–532:1	259
GP 22 B	Ø22 mm	0.1–0.3 Nm	4.4:1–4592:1	260
GP 22 L	Ø22 mm	0.2–0.6 Nm	3.8:1–4592:1	261
GP 22 A	Ø22 mm	0.5–1.0 Nm	3.8:1–4592:1	262
GP 22 AR	Ø22 mm	0.5 Nm	3.8:1–5.4:1	263
GP 22 C	Ø22 mm	0.5–2.0 Nm	3.8:1–4592:1	264–265
GP 22 HP	Ø22 mm	2.0–3.4 Nm	3.8:1–850:1	266
GP 22 HD	Ø22 mm	2.0–4.0 Nm	3.8:1–4592:1	267
GP 22 M	Ø22 mm	0.5–2.0 Nm	3.8:1–4592:1	268
GPX 22	Ø22 mm	1.5 Nm	3.9:1–1897:1	68
GS 24 A	Ø24 mm	0.1 Nm	7.2:1–325:1	269
GP 26 A	Ø26 mm	0.75–4.5 Nm	5.2:1–236:1	270
GS 30 A	Ø30 mm	0.07–0.2 Nm	15:1–500:1	271
GP 32 BZ	Ø32 mm	0.75–4.5 Nm	3.7:1–236:1	272
GP 32 A	Ø32 mm	0.75–4.5 Nm	3.7:1–6285:1	273–274
GP 32 AR	Ø32 mm	0.75 Nm	3.7:1–5.8:1	275
GP 32 C	Ø32 mm	1.0–6.0 Nm	3.7:1–6285:1	276–277
GP 32 CR	Ø32 mm	1.0 Nm	3.7:1–5.8:1	278
GP 32 HP	Ø32 mm	4.0–8.0 Nm	14:1–913:1	279
GP 32 HD	Ø32 mm	3.0–8.0 Nm	3.7:1–6285:1	280
KD 32	Ø32 mm	1.0–4.5 Nm	11:1–1091:1	281
GS 38 A	Ø38 mm	0.1–0.6 Nm	6:1–900:1	282
GP 42 C	Ø42 mm	3.0–15.0 Nm	3.5:1–936:1	283–285
GPX 42	Ø42 mm	15.0 Nm	3.5:1–936:1	71
GS 45 A	Ø45 mm	0.5–2.0 Nm	5:1–1952:1	286
GP 52 C	Ø52 mm	4.0–30.0 Nm	3.5:1–936:1	287–288
GP 62 A	Ø62 mm	8.0–50.0 Nm	5.2:1–236:1	289
GP 81 A	Ø81 mm	20.0–120.0 Nm	3.7:1–308:1	290

maxon sensor		Page	342 ESCON 36/2 DC	342 ESCON 36/3 EC	343 ESCON Module 50/4 EC-S	343 ESCON Module 50/5	344 ESCON 50/5	344 ESCON 70/10	346 DEC Module 24/2	346 DEC Module 50/5	350 EPOS2 24/2 DC	350 EPOS2 24/2 EC	350 EPOS2 24/2 DC/EC	350 EPOS2 Module 36/2	351 EPOS2 24/5	351 EPOS2 50/5	351 EPOS2 70/10	354 EPOS2 P 24/5	357 EPOS3 70/10	360 MAXPOS 50/5
ENX 10 EASY	1024 CPT, 3 channel	74	1								15		15	16				15		
ENX 16 QUAD	1 CPT, 2 channel	74																		
ENX 16 EASY	1024 CPT, 3 channel	75	1			19	1	1					1	18	1	1		1	1	1
Encoder MILE	256–2048 CPT, 2 channel, LD	308				20	14					14		2	14			14	14	14
Encoder MILE	512–4096 CPT, 2 channel, LD	309				19	1	1							1		1	1	1	1
Encoder MILE	800–3200 CPT, 2 channel, LD	310				20	14	14							14		14	14	14	14
Encoder 16 EASY	128–1024 CPT, 3 channel, LD	311				19	1							18	1	1		1	1	1
Encoder MR, type S	16 CPT, 2 channel	312	10			21	10													
Encoder MR, type S	64–256 CPT, 2 channel, LD	313	7			22	7				7		7	3					7	7
Encoder MR, type S	100 CPT, 2 channel, LD	313	12			23	12				12		12	12						
Encoder MR, type S	64–256 CPT, 2 channel	314	10			21	10													
Encoder MR, type M	32 CPT, 2/3 channel	315/316	10			21	10													
Encoder MR, type M	128–512 CPT, 2/3 channel, LD	317	9			21	10				1		9	6					9	9
Encoder MR, type M	128–512 CPT, 2/3 channel, LD	318	1			19	1	1				1	1	18	1	1	1	1	1	1
Encoder MR, type ML	128–1000 CPT, 3 channel, LD	319	1			19	1	1					1	18	1	1	1	1	1	1
Encoder MR, type L	256–1024 CPT, 3 channel, LD	320	1			19	1	1					1	18	1	1	1	1	1	1
Encoder Opt 8	50 CPT, 2 channel	321																		
Encoder SCH16F	2000–3600 CPT, 3 channel, LD	322	1			19	1	1					1	18	1	1	1	1	1	1
Encoder 2RMHF	3000–5000 CPT, 3 channel, LD	323				19	1	1						18	1	1	1	1	1	1
Encoder HEDS 5540	500 CPT, 3 channel	325/326	5			24	5	5												
Encoder HEDL 5540	500 CPT, 3 channel	327–329	1			19	1	1					1	1	1	1	1	1	1	1
Encoder HEDL 9140	500 CPT, 3 channel	331/332				19	4	4							4	4	4	4	1	4
Encoder MEnc 10/13	12/16 CPT, 2 channel	333–335	10			21	10													
DC tacho DCT 22	0.52 V	336	11			19	1	1												

1 – 24 Information on connecting sensors with controllers, page 26.

Selection Guide

maxon DC motor

			Page	Type: Graphite Brushes	Precious Metal Brushes	Capacitor Long Life	Sleeve Bearing	Ball Bearing	Modular System: Encoder	DC-Tacho	Brake	Recommended Electronics: ESCON 36/2 DC 342	ESCON 36/3 EC 342	ESCON Module 50/4 EC-S 343	ESCON Module 50/5 343	ESCON 50/5 344	ESCON 70/10 344	DEC Module 24/2 346	DEC Module 50/5 346	EPOS2 24/2 DC 350	EPOS2 24/2 EC 350	EPOS2 24/2 DC/EC 350	EPOS2 Module 36/2 350	EPOS2 24/5 351	EPOS2 50/5 351	EPOS2 70/10 351	EPOS2 P 24/5 354	EPOS3 70/10 EtherCAT 357	MAXPOS 50/5 360
maxon X drives																													
1 W	1.0 mNm	**DCX 10**	58	●	●	●	●		●			11										5	8				9		
1.5 W	2.2 mNm	**DCX 10**	59	●	●	●	●		●			11										5	8				9		
4.5 W	5.4 mNm	**DCX 16**	60	●	●	●	●		●			11										5	8				9	9	9
14 W	15.3 mNm	**DCX 22**	61	●	●	●	●		●			11			12	1						5	8	9	9		9	9	9
11 W	32.2 mNm	**DCX 22**	62	●	●	●	●		●			11			12	1						5	8	9	9		9	9	9
70 W	128 mNm	**DCX 32**	63	●				●	●						12	1	1							9	9	9	9	9	9
80 W	138 mNm	**DCX 35**	64	●				●	●						12	1	1							9	9	9	9	9	9
maxon DC motor																													
0.3 W	0.3 mNm	**RE 6**	80		●		●					11																	
0.5 W	0.6 mNm	**RE 8**	81		●		●		●			11								4		10	6						
0.75 W	0.8 mNm	**RE 10**	82/83		●		●		●			11								4		10	6						
0.75 W	0.5–1.3 mNm	**RE 13**	88/89		●		●		●			11			12	1				4		10	6					4	4
1.2 W	0.5–1.3 mNm	**RE 13**	86/87		●		●					11			12	1													
1.5 W	1.5–1.6 mNm	**RE 10**	84/85		●		●		●			11								4		10	6						
1.5 W	0.3–1.2 mNm	**RE 13**	94–97	●			●		●			11			12	1				4		10	6					4	4
2.0 W	1.5–3.0 mNm	**RE 13**	92/93		●		●		●			11			12	1				4		10	6					4	4
2.0 W	1.4–2.4 mNm	**RE 16**	102		●	●	●		●			11			12	1				1		2	7					3	3
2.5 W	1.4–3.0 mNm	**RE 13**	90/91		●		●					11			12	1													
3.0 W	1.3–2.4 mNm	**RE 13**	98–101	●			●		●			11			12	1				4		10	6					4	4
3.2 W	2.4–5.6 mNm	**RE 16**	103/104		●	●	●		●			11			12	1				1		2	7					3	3
4.5 W	2.2–4.8 mNm	**RE 16**	105/106	●			●		●			11			12	1				1		2	7					3	3
10 W	11.4–28.7 mNm	**RE 25**	107		●	●		●	●	●		11			12	1	1					5	8	9	9		9	9	9
15 W	53.0 mNm	**RE 30**	110		●			●	●			11			12	1						5	8	9	9		9	9	9
20 W	21.9–32.9 mNm	**RE 25**	108	●				●	●	●	●	11			12	1	1					5	8	9	9		9	9	9
20 W	11.1–30.0 mNm	**RE 25**	109	●				●	●	●	●	11			12	1	1					5	8	9	9		9	9	9
25 W	87.6–88.2 mNm	**RE 40**	113		●			●	●			11			12	1						5	8	9	9		9	9	9
60 W	51.6–89.7 mNm	**RE 30**	111	●				●	●			11			12	1	1						8	9	9		9	9	9
90 W	73.1–106.0 mNm	**RE 35**	112	●				●	●	●	●				12	1	1							9	9		9	9	9
150 W	94.9–192.0 mNm	**RE 40**	114	●				●	●		●				12	1	1							9	9	9	9	9	9
200 W	405.0–452.0 mNm	**RE 50**	115	●				●	●		●				12	1	1								9	9		9	9
250 W	442.0–865.0 mNm	**RE 65**	116	●				●	●		●				12	1	1								9	9		9	9
maxon *A*-max																													
0.5 W	0.8–0.9 mNm	***A*-max 12**	120		●	●	●		●			11			12	1				4			6					4	4
0.75 W	0.8–1.0 mNm	***A*-max 12**	119		●	●	●					11			12	1													
1.2 W	0.7–2.2 mNm	***A*-max 16**	122		●	●	●	○	●			11			12	1				1			7					3	3
1.5 W	1.3–3.6 mNm	***A*-max 19**	126		●	●	●	○	●			11			12	1				1			7					3	3
2.0 W	0.7–2.5 mNm	***A*-max 16**	121/123/124	●	●	●	●	○	●			11			12	1				1			7					3	3
2.5 W	0.8–3.9 mNm	***A*-max 19**	125/127/128	●	●	●	●	○	●			11			12	1				1			7					3	3
3.5 W	4.8–5.3 mNm	***A*-max 22**	130		●	●	●	○	●			11			12	1				1			7					3	3
4.0 W	5.4–12.4 mNm	***A*-max 26**	133/134		●	●	●	○	●			11			12	1						5	8	9	9		9	9	9
4.5 W	4.5–13.4 mNm	***A*-max 26**	136		●	●	●	○	●			11			12	1						5	8	9	9		9	9	9
5.0 W	4.8–6.3 mNm	***A*-max 22**	129		●	●	●	○				11			12	1													
6.0 W	5.9–6.9 mNm	***A*-max 22**	131/132	●			●	○	●			11			12	1				1			7					3	3
6.0 W	6.8–13.9 mNm	***A*-max 26**	137/138	●			○	●	●			11			12	1						5	8	9	9		9	9	9
7.0 W	4.5–13.1 mNm	***A*-max 26**	135		●	●	●	○				11			12	1													
11 W	5.5–17.8 mNm	***A*-max 26**	139/140	●			○	●	●			11			12	1	1					5	8	9	9		9	9	9
15 W	32.5–37.7 mNm	***A*-max 32**	141/142	●			○	●	●			11			12	1	1					5	8	9	9		9	9	9
20 W	39.7–45.1 mNm	***A*-max 32**	143/144	●			○	●	●			11			12	1	1					5	8	9	9		9	9	9
maxon *RE*-max																													
0.75 W	0.3–1.3 mNm	***RE*-max 13**	148		●		●		●			11			12	1				4			7					4	4
1.2 W	0.3–1.3 mNm	***RE*-max 13**	147		●	●	●					11			12	1													
2 W	0.9–2.8 mNm	***RE*-max 13**	150		●	●	●		●			11			12	1				4			7					4	4
2.5 W	1.0–2.8 mNm	***RE*-max 13**	149		●	●	●					11			12	1													
2.5 W	1.3–3.4 mNm	***RE*-max 17**	152		●	●	●	○	●			11			12	1				1			7					3	3
3.5 W	2.5–6.3 mNm	***RE*-max 21**	156		●	●	●	○	●			11			12	1						5	7					9	9
4.0 W	1.3–3.7 mNm	***RE*-max 17**	151		●	●	●	○				11			12	1													
4.5 W	1.4–3.9 mNm	***RE*-max 17**	153/154	●			●	○	●			11			12	1				1			7					3	3
5.0 W	2.6–6.2 mNm	***RE*-max 21**	155		●	●	●	○				11			12	1													
6.0 W	1.9–6.8 mNm	***RE*-max 21**	157/158	●			●	○	●			11			12	1						5	7					9	9
6.5 W	8.6–10.6 mNm	***RE*-max 24**	160		●	●	●	○	●			11			12	1						5	7					9	9
9.0 W	8.7–27.1 mNm	***RE*-max 29**	164		●	●	●	○	●			11			12	1						5	7	9	9		9	9	9
10 W	8.6–10.5 mNm	***RE*-max 24**	159		●	●	●	○				11			12	1	1												
11 W	10.8–12.2 mNm	***RE*-max 24**	161/162	●			●	○	●			11			12	1	1					5	7					9	9
15 W	8.7–27.0 mNm	***RE*-max 29**	163		●	●	●	○				11			12	1	1												
22 W	10.9–30.6 mNm	***RE*-max 29**	165/166	●			○	●	●			11			12	1	1					5	7	9	9		9	9	9

Nominal torque mNm 0.1 0.2 0.3 0.4 0.5 0.6 0.7 0.8 0.9 1 2 3 4 5 6

○ Option/On request

● For motors with / without sensors

● At least 2 channel encoder with line driver is required

❶ – ⑫ Information on connecting motors with controllers, page 26

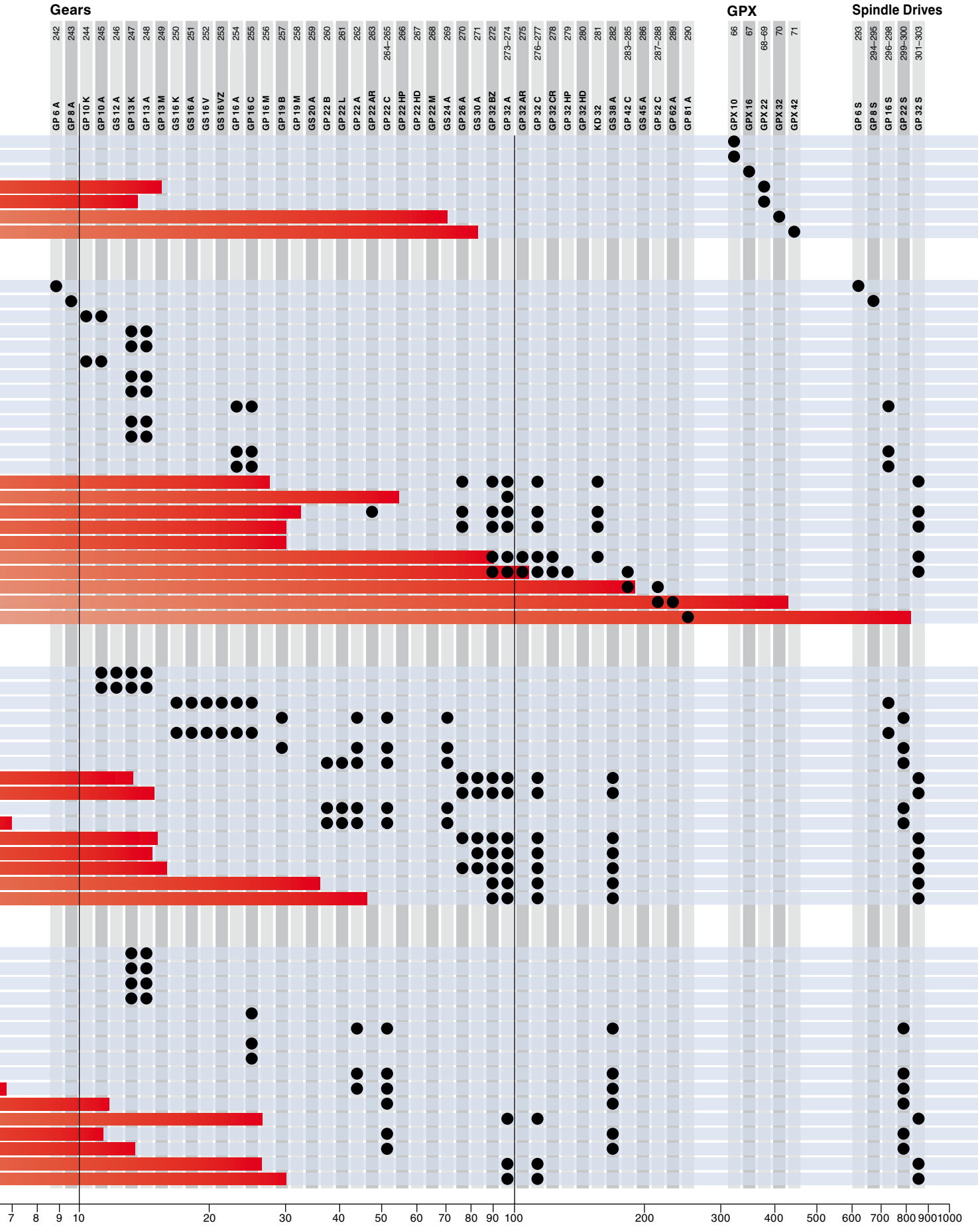
Gears
GPX
Spindle Drives
242 GP 6 A
243 GP 8 A
244 GP 10 K
245 GP 10 A
246 GS 12 A
247 GP 13 K
248 GP 13 A
249 GP 13 M
250 GS 16 K
251 GS 16 A
252 GS 16 V
253 GS 16 VZ
254 GP 16 A
255 GP 16 C
256 GP 16 M
257 GP 19 B
258 GP 19 M
259 GS 20 A
260 GP 22 B
261 GP 22 L
262 GP 22 A
263 GP 22 AR
264–265 GP 22 C
266 GP 22 HP
267 GP 22 HD
268 GP 22 M
269 GS 24 A
270 GP 26 A
271 GS 30 A
272 GP 32 BZ
273–274 GP 32 A
275 GP 32 AR
276–277 GP 32 C
278 GP 32 CR
279 GP 32 HP
280 GP 32 HD
281 KD 32
282 GS 38 A
283–285 GP 42 C
286 GS 45 A
287–288 GP 52 C
289 GP 62 A
290 GP 81 A
66 GPX 10
67 GPX 16
68–69 GPX 22
70 GPX 32
71 GPX 42
293 GP 6 S
294–295 GP 8 S
296–298 GP 16 S
299–300 GP 22 S
301–303 GP 32 S
7 8 9 10 20 30 40 50 60 70 80 90 100 200 300 400 500 600 700 800 900 1000

Selection Guide

maxon EC motor

				Type					Modular System			Recommended Electronics															
			Page	Sterilizable	HD	Hall Sensors	Sensorless	Sleeve Bearing	Ball Bearing	Integrated Electronics	Encoder	Resolver	Brake	ESCON 36/2 DC 342	ESCON 36/3 EC 342	ESCON Module 50/4 EC-S 343	ESCON Module 50/5 343	ESCON 50/5 344	ESCON 70/10 344	DEC Module 24/2 346	DEC Module 50/5 346	EPOS2 24/2 DC 350	EPOS2 24/2 EC 350	EPOS2 24/2 DC/EC 350	EPOS2 Module 36/2 350	EPOS2 24/5 351	EPOS2 50/5 351	EPOS2 70/10 351	EPOS2 P 24/5 354	EPOS3 70/10 EtherCAT 357	MAXPOS 50/5 360
maxon EC motor																															
1.5 W	0.3 mNm	EC 6	170			●	●		●						12	3				5											
2.0 W	0.4–0.5 mNm	EC 6	171			●	●		●						12	3				5											
2.0 W	0.9 mNm	EC 8	172			●	●		●						12	3				5											
6.0 W	2.4–2.5 mNm	EC 13	174			●	●		●						26	3	28	9		5	5										
8.0 W	1.5 mNm	EC 10	173			●	●		●						25	3	28	9		5	5										
12 W	5.2–5.7 mNm	EC 13	175			●	●		●						26	3	28	9		5	5										
30 W	6.4–6.9 mNm	EC 13 ster.	176		●	●	●		●						1	4	29	1		5	5										
30 W	8.0–8.5 mNm	EC 16	178			●	●		●		●				1	7	30	2		5	5		1		14	17	19		17	23	33
30 W	7.4–7.8 mNm	EC 16 ster.	179		●	●	●		●						1	4	29	1		5	5										
40 W	19.1–19.7 mNm	EC 22	185			●	●		●		●	○			1	7	30	2	2	5	5		1		14	17	19	21	17	23	33
40 W	16.0–16.5 mNm	EC 22 ster.	186		●	●	●		●		●				1	4	29	1	1	5	5										
50 W	7.9–8.2 mNm	EC 13 ster.	177		●	●	●		●						1	4	29	1		5	5										
60 W	16.5–17.7 mNm	EC 16	180			●	●		●		●				1	7	30	2		5	5		1		14	17	19		17	23	33
60 W	13.4–13.7 mNm	EC 16 ster.	181		●	●	●		●						1	4	29	1		5	5										
60 W	11.3–12.2 mNm	EC 19	182				●		●							4															
80 W	33.7–54.5 mNm	EC 22 HD	189		●	●	●		●		●	●																			
80 W	42.8–46.9 mNm	EC 32	192			●			●		●	○				4	29	1	1		5					18	20	22	18	24	34
100 W	43.6–46.4 mNm	EC 22	187			●	●		●						1	7	30	2	2	5	5		1		14	17	19	21	17	23	33
100 W	39.8–41.4 mNm	EC 22 ster.	188		●	●	●		●		●	●	●		1	4	29	1	1	5	5										
120 W	23.5–24.5 mNm	EC 19	183			●	●		●						1	4	29	1	1	5	5										
120 W	22.5–24.5 mNm	EC 19 ster.	184		●	●	●		●						1	4	29	1	1	5	5										
150 W	168–191 mNm	EC 45	194			●			●		●	●	●			4	29	1	1		5						20	22		24	34
170 W	160–164 mNm	EC 40	193			●			●							7	30	2	2		6					1	1	1	1	1	1
240 W	57.2–149 mNm	EC 22 HD	190		●	●	●		●																						
250 W	32.8 mNm	EC 25	191			●			●		●	●	●			4	29	1	1												
250 W	311–347 mNm	EC 45	195			●			●		●	●	●			4	29	1	1		5						20	22		24	34
400 W	747–830 mNm	EC 60	196			●			●							4	29	1	1		5							22		24	34
maxon *EC*-max																															
5.0 W	3.2–3.3 mNm	EC-max 16	199			●			●		●				1	7	30	2		5			1		14					23	33
5.0 W	2.2–2.3 mNm	EC-max 16, 2-w	200						●	●																					
8.0 W	7.6–8.2 mNm	EC-max 16	201			●			●		●				1	7	30	2		5			1		14					23	33
12 W	10.2–10.9 mNm	EC-max 22	202			●			●		●		●		1	7	30	2		5	5		1		14	17	19		17	23	33
25 W	21.7–23.1 mNm	EC-max 22	203			●			●		●		●		1	7	30	2		5	5		1		14	17	19		17	23	33
40 W	33.3–34.6 mNm	EC-max 30	204			●			●		●		●		2	7	30	2	2	6	6					1	1		1	1	1
60 W	60.2–63.9 mNm	EC-max 30	205			●			●		●		●		2	7	30	2	2	6	6					1	1		1	1	1
70 W	87.1–94.7 mNm	EC-max 40	206			●			●		●		●			7	30	2	2		6					1	1		1	1	1
120 W	168–211 mNm	EC-max 40	207			●			●		●		●			7	30	2	2		6					1	1	1	1	1	1
maxon *EC*-4pole																															
90 W	51.0–53.0 mNm	*EC*-4pole 22	211			●			●		●					4	29	1	1		5					18	20	22	18	24	34
100 W	65.5–71.6 mNm	*EC*-4pole 30	213			●			●		●		●			4	29	1	1								20	22		24	34
120 W	60.9–64.3 mNm	*EC*-4pole 22	212			●			●		●					4	29	1	1		5					18	20	22	18	24	34
200 W	127–131 mNm	*EC*-4pole 30	214			●			●		●		●			4	29	1	1								20	22		24	34
220 W	92.8–322 mNm	*EC*-4pole 32 HD	215		●	●	●		●																						
480 W	359–916 mNm	*EC*-4pole 32 HD	216		●	●	●		●																						
maxon flat motor																															
0.2 W	0.2 mNm	EC 10 flat	219			●	●		●						11	3				25			11								
0.5 W	0.8–0.9 mNm	EC 9.2 flat	218			●	●		●						12	3				5			12		27						
1.5 W	1.6–1.7 mNm	EC 14 flat	220				●		●							3															
2.0 W	3.6 mNm	EC 20 flat IE	223						●	●																					
3.0 W	3.2–4.1 mNm	EC 20 flat	221			●	●		●						26	3	28	9		5			26							15	15
5.0 W	7.3–8.4 mNm	EC 20 flat	222			●	●		●						26	3	28	9		5			26							15	15
5.0 W	7.3–7.5 mNm	EC 20 flat IE	224						●	●																					
6.0 W	7.5–9.4 mNm	EC 32 flat	225			●	●		●						26	3	28	9		5	5		26		35					15	15
12 W	18.7–25.8 mNm	EC 45 flat	230			●	●		●						26	3	28	9		5	5		26		35					15	15
15 W	22.4–23.3 mNm	EC 32 flat	226			●	●		●						26	3	28	9		5	5		26		35					15	15
15 W	24.6–25.5 mNm	EC 32 flat IE	227						●	●																					
30 W	53.2–66.6 mNm	EC 45 flat	231			●	●		●						26	3	28	9		5	5		26		35	15			9	15	15
30 W	57.0–89.9 mNm	EC 45 flat IE	234						●	●																					
50 W	69.5–95.2 mNm	EC 45 flat	232			●			●						32	13	31	10			8		32		36	16			16	16	16
50 W	76.6–123.0 mNm	EC 45 flat IE	235						●	●																					
50 W	43.2–52.7 mNm	*EC*-i 40	228			●			●						2	7	30	2			6				37	1			1	1	1
70 W	68.4–82.9 mNm	*EC*-i 40	229			●			●						2	7	30	2			6				37	1	1		1	1	1
70 W	108–134 mNm	EC 45 flat	233			●			●						32	13	31	10			8				36	16			16	16	16
90 W	425–499 mNm	EC 90 flat	237			●			●							13	31	10	10		8					16	16	16	16	16	16
100 W	216–317 mNm	EC 60 flat	236			●			●								30	2	2		6					1	1	1	1	1	1

Nominal torque mNm: 0.1, 0.2, 0.3, 0.4, 0.5, 0.6, 0.7, 0.8, 0.9, 1, 2, 3, 4, 5, 6, 7

○ on request

For motors without Hall sensors

For motors with Hall sensors

For motors with Hall sensors, with or without encoders

At least 2 channel encoder with line driver or Hall sensors in required

1 – 29 Information on connecting motors with controllers, page 26

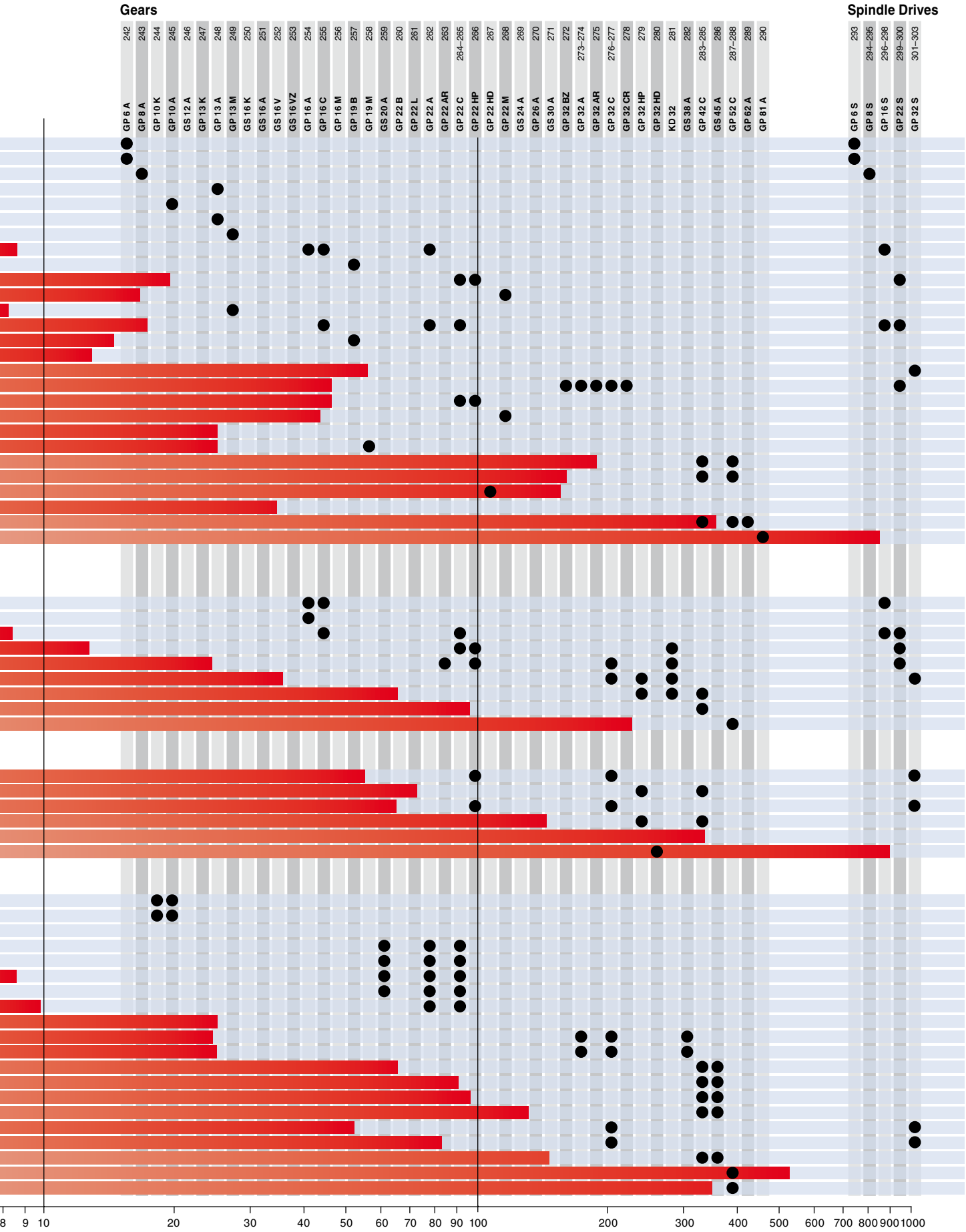
Gears
Spindle Drives
242 GP 6 A
243 GP 8 A
244 GP 10 K
245 GP 10 A
246 GS 12 A
247 GP 13 K
248 GP 13 A
249 GP 13 M
250 GS 16 K
251 GS 16 A
252 GS 16 V
253 GS 16 VZ
254 GP 16 A
255 GP 16 C
256 GP 16 M
257 GP 19 B
258 GP 19 M
259 GS 20 A
260 GP 22 B
261 GP 22 L
262 GP 22 A
263 GP 22 AR
264–265 GP 22 C
266 GP 22 HP
267 GP 22 HD
268 GP 22 M
269 GS 24 A
270 GP 26 A
271 GS 30 A
272 GP 32 BZ
273–274 GP 32 A
275 GP 32 AR
276–277 GP 32 C
278 GP 32 CR
279 GP 32 HP
280 GP 32 HD
281 KD 32
282 GS 38 A
283–285 GP 42 C
286 GS 45 A
287–288 GP 52 C
289 GP 62 A
290 GP 81 A
293 GP 6 S
294–295 GP 8 S
296–298 GP 16 S
299–300 GP 22 S
301–303 GP 32 S
8 9 10 20 30 40 50 60 70 80 90 100 200 300 400 500 600 700 800 900 1000

Accessories overview

maxon sensor

Selection Guide, page 21

1	Can be connected directly. No accessories required.
2	Eva Board 361435 and adapter 405120 required.
3	Eva Board 361435 and extension cable 354046 required.
4	Adapter 223774 required.
5	Adapter 223774 and extension cable 3409.506 (6 poles plug must be removed) required.
6	Eva Board 361435 required. Can be connected directly. Attach jumpers to printed circuit board.
7	Adapter 327086 required.
8	Adapter 473103 and extension cable 354046 required. Plug must be removed.
9	Can be connected directly. Attach solder bridges / jumpers to printed circuit board.
10	Adapter 223774 required. Plug must be removed.
11	Extension cable 403964 required.
12	Adapter 425931 required.
13	Eva Board 361435, adapter 473103, and extension cable 354046 required. Plug must be removed.
14	Extension cable 354046 required.
15	Adapter 405120 required.
16	Eva Board 361435 and adapter 405120 required.
18	Eva Board 361435 required.
19	ESCON Module Motherboard 438779 required.
20	ESCON Module Motherboard 438779 and extension cable 354046 required.
21	ESCON Module Motherboard 438779 and adapter 223774 required. Plug must be removed.
22	ESCON Module Motherboard 438779 and adapter 327086 required.
23	ESCON Module Motherboard 438779 and adapter 425931 required.
24	ESCON Module Motherboard 438779, adapter 223774, and extension cable 3409.506 (6-pin plug must be removed) are required.

maxon DC motor

Selection Guide, page 22

1	Can be connected directly. No accessories required.
2	Can be connected directly. Attach solder bridge to printed circuit board.
3	Can be connected directly. Connect via encoder connection.
4	Adapter 327086 required.
5	Extension cable 303490 required.
6	Evaluation board 361435 and adapter 327086 required. Connect via encoder connection.
7	Evaluation board 361435 required. Connect via encoder connection.
8	Evaluation board 361435 and extension cable 275851 required.
9	Extension cable 275851 required.
10	Adapter 327086 required. Attach solder bridge to printed circuit board.
11	Can be connected directly, or by using extension cable 403962.
12	ESCON Module Motherboard 438779 required.

maxon EC motor

Selection Guide, page 24

1	Can be connected directly. No accessories required.
2	Can be connected directly. Plug must be removed.
3	ESCON Module Motherboard Sensorless 450237 and adapter 220310 required.
4	ESCON Module Motherboard Sensorless 450237 required.
5	Evaluation board 370652 required.
6	Evaluation board 370652 required. Plug must be removed.
7	ESCON Module Motherboard Sensorless 450237 required. Plug must be removed.
8	Evaluation board 370652 and extension cable 339380 required.
9	Adapter 220300 required.
10	Extension cable 339380 required.
11	Adapter 418721 required.
12	Adapter 418723 required.
13	ESCON Module Motherboard Sensorless 450237 and extension cable 339380 required.
14	Evaluation board 361435 and plug set 384915 required. Plug must be removed.
15	Adapter 220300, extension cable 275878 and extension cable 275851 required.
16	Extension cable 354045 required.
17	Plug set 384915 required. Plug must be removed.
18	Plug set 384915 required.
19	Plug set 351061 required. Plug must be removed.
20	Plug set 351061 required.
21	Plug set 381405 required. Plug must be removed.
22	Plug set 381405 required.
23	Plug set 423544 required. Plug must be removed.
24	Plug set 423544 required.
25	Evaluation board 370652 and adapter 425931 required.
26	Adapter 418719 required.
27	Eva Board 361435, adapter 425931, extension cable 275878, and extension cable 275851 required.
28	ESCON Module Motherboard 438779 and adapter 220300 required.
29	ESCON Module Motherboard 438779 required.
30	ESCON Module Motherboard 438779 required. Plug must be removed.
31	ESCON Module Motherboard 438779 and extension cable 339380 required.
32	Extension cable 442086 required.
33	Plug set 451746 required. Plug must be removed.
34	Plug set 451746 required.
35	Eva Board 361435, adapter 220300, extension cable 275878, and extension cable 275851 required.
36	Eva Board 361435, extension cable 354045 required.
37	Eva Board 361435

Accessories overview

The following table contains information on connecting maxon motors with maxon controllers. All listed adapters, plugs, evaluation boards, etc. must be ordered separately. The numbers refer to the Selection Guide pages 21–25.

maxon motor

driven by precision

Contents

Page	Technology – short and to the point
30–31	**maxon DC motor**
32–35	**maxon EC motor**
36–37	**maxon gear**
38–39	**maxon sensor**
40–41	**maxon motor control**
42–49	**maxon DC and EC motor Key information**
50	**maxon conversion table**
390–393	**Contact information**

Page	*RE*-max Program
147–148	**13** ∅13 mm, Precious metal brushes CLL, 0.75/1.2 W
149–150	**13** ∅13 mm, Precious metal brushes CLL, 2/2.5 Watt
151–152	**17** ∅17 mm, Precious metal brushes CLL, 4/2.5 Watt
153–154	**17** ∅17 mm, Graphite brushes, 4.5 Watt
155–156	**21** ∅21 mm, Precious metal brushes CLL, 5/3.5 Watt
157–158	**21** ∅21 mm, Graphite brushes, 6 Watt
159–160	**24** ∅24 mm, Precious metal brushes CLL, 10/6.5 Watt
161–162	**24** ∅24 mm, Graphite brushes, 11 Watt
163–164	**29** ∅29 mm, Precious metal brushes CLL, 15/9 Watt
165–166	**29** ∅29 mm, Graphite brushes, 22 Watt

maxon X drives

Can be configured online

Page		
52–56	**Technology and processes**	
58	**DCX 10 S** ∅10 mm, brushed	NEW
59	**DCX 10 L** ∅10 mm, brushed	
60	**DCX 16 S** ∅16 mm, brushed	NEW
61	**DCX 22 S** ∅22 mm, brushed	
62	**DCX 22 L** ∅22 mm, brushed	NEW
63	**DCX 32 L** ∅32 mm, brushed	NEW
64	**DCX 35 L** ∅35 mm, brushed	
66	**GPX 10** ∅10 mm, Planetary gearhead	
67	**GPX 16** ∅16 mm, Planetary gearhead	NEW
68–69	**GPX 22** ∅22 mm, Planetary gearhead	NEW
70	**GPX 32** ∅32 mm, Planetary gearhead	NEW
71	**GPX 42** ∅42 mm, Planetary gearhead	
74	**ENX 10 EASY/QUAD** Encoder	
75	**ENX 16 EASY** Encoder	

maxon DC motor

DC motors with moving coil rotor

Page	RE-Program	
78	**Standard specification**	
80	**RE 6** ∅6 mm, Precious metal brushes, 0.3 Watt	
81	**RE 8** ∅8 mm, Precious metal brushes, 0.5 Watt	
82–83	**RE 10** ∅10 mm, Precious metal brushes, 0.75 Watt	
84–85	**RE 10** ∅10 mm, Precious metal brushes, 1.5 Watt	
86–89	**RE 13** ∅13 mm, Precious metal brushes, 1.2/0.75 Watt	
90–93	**RE 13** ∅13 mm, Precious metal brushes, 2.5/2 Watt	
94–97	**RE 13** ∅13 mm, Graphite brushes, 1.5 Watt	
98–101	**RE 13** ∅13 mm, Graphite brushes, 3.0 Watt	
102	**RE 16** ∅16 mm, Precious metal brushes CLL, 2 Watt	
103–104	**RE 16** ∅16 mm, Precious metal brushes CLL, 3.2 Watt	
105–106	**RE 16** ∅16 mm, Graphite brushes, 4.5 Watt	
107	**RE 25** ∅25 mm, Precious metal brushes CLL, 10 Watt	
108–109	**RE 25** ∅25 mm, Graphite brushes, 20 Watt	
110	**RE 30** ∅30 mm, Precious metal brushes, 15 Watt	
111	**RE 30** ∅30 mm, Graphite brushes, 60 Watt	
112	**RE 35** ∅35 mm, Graphite brushes, 90 Watt	
113	**RE 40** ∅40 mm, Precious metal brushes, 25 Watt	NEW
114	**RE 40** ∅40 mm, Graphite brushes, 150 Watt	
115	**RE 50** ∅50 mm, Graphite brushes, 200 Watt	
116	**RE 65** ∅65 mm, Graphite brushes, 250 Watt	

Page	*A*-max Program
119–120	**12** ∅12 mm, Precious metal brushes CLL, 0.75/0.5 Watt
121–122	**16** ∅16 mm, Precious metal brushes CLL, 2/1.2 Watt
123–124	**16** ∅16 mm, Graphite brushes, 2 Watt
125–126	**19** ∅19 mm, Precious metal brushes CLL, 2.5/1.5 Watt
127–128	**19** ∅19 mm, Graphite brushes, 2.5 Watt
129–130	**22** ∅22 mm, Precious metal brushes CLL, 5/3.5 Watt
131–132	**22** ∅22 mm, Graphite brushes, 6 Watt
133–136	**26** ∅26 mm, Precious metal brushes CLL, 4/7/4.5 Watt
137–140	**26** ∅26 mm, Graphite brushes, 6/11 Watt
141–144	**32** ∅32 mm, Graphite brushes, 15/20 Watt

maxon EC motor

Brushless DC servomotors

Page	EC Program	
168	**Standard specification**	
170	**EC 6** ∅6 mm, brushless, 1.5 Watt	NEW
171	**EC 6** ∅6 mm, brushless, 2 Watt	NEW
172	**EC 8** ∅8 mm, brushless, 2 Watt	NEW
173	**EC 10** ∅10 mm, brushless, 8 Watt	
174–175	**EC 13** ∅13 mm, brushless, 6/12 Watt	
176	**EC 13** ∅13 mm, brushless, 30 Watt	**sterilizable**
177	**EC 13** ∅13 mm, brushless, 50 Watt	**sterilizable**
178/180	**EC 16** ∅16 mm, brushless, 30/60 Watt	
179/181	**EC 16** ∅16 mm, brushless, 30/60 Watt	**sterilizable**
182	**EC 19** ∅19 mm, brushless, 60 Watt	NEW
183	**EC 19** ∅19 mm, brushless, 120 Watt	NEW
184	**EC 19** ∅19 mm, brushless, 120 Watt **sterilizable**	NEW
185/187	**EC 22** ∅22 mm, brushless, 40/100 Watt	
186/188	**EC 22** ∅22 mm, brushless, 40/100 Watt	**sterilizable**
189–190	**EC 22** ∅22 mm, brushless, 80/240 Watt	**HD**
191	**EC 25** ∅25 mm, brushless, High-Speed	
192	**EC 32** ∅32 mm, brushless, 80 Watt	
193	**EC 40** ∅40 mm, brushless, 170 Watt	
194–195	**EC 45** ∅45 mm, brushless, 150/250 Watt	
196	**EC 60** ∅60 mm, brushless, 400 Watt	

Page	*EC*-max Program
199–201	**16** ∅16 mm, brushless, 5/8 Watt
202–203	**22** ∅22 mm, brushless, 12/25 Watt
204	**30** ∅30 mm, brushless, 40 Watt
205	**30** ∅30 mm, brushless, 60 Watt
206	**40** ∅40 mm, brushless, 70 Watt
207	**40** ∅40 mm, brushless, 120 Watt

Page	*EC*-4pole Program	
211	**22** ∅22 mm, brushless, 90 Watt	
212	**22** ∅22 mm, brushless, 120 Watt	
213	**30** ∅30 mm, brushless, 100 Watt	
214	**30** ∅30 mm, brushless, 200 Watt	
215	**32** ∅32 mm, brushless, 220 Watt	**HD**
216	**32** ∅32 mm, brushless, 480 Watt	**HD**

Page	EC flat Program	
218	**EC 9.2 flat** ∅10 mm, brushless, 0.5 Watt	
219	**EC 10 flat** ∅10 mm, brushless, 0.2 Watt	
220	**EC 14 flat** ∅13.6 mm, brushless, 1.5 Watt	
221–222	**EC 20 flat** ∅20 mm, brushless, 3/5 Watt	
223–224	**EC 20 flat** ∅20 mm, brushless, 2/5 Watt	**IE**
225–226	**EC 32 flat** ∅32 mm, brushless, 6/15 Watt	
227	**EC 32 flat** ∅32 mm, brushless, 15 Watt	**IE**
228–229	**EC-i 40** ∅40 mm, brushless, 50/70 Watt	
230	**EC 45 flat** ∅42.8 mm, brushless, 12 Watt	
231	**EC 45 flat** ∅42.9 mm, brushless, 30 Watt	
232	**EC 45 flat** ∅42.8 mm, brushless, 50 Watt	
233	**EC 45 flat** ∅42.8 mm, brushless, 70 Watt	
234–235	**EC 45 flat** ∅45 mm, brushless, 30/50 Watt	**IE**
236	**EC 60 flat** ∅60 mm, brushless, 100 Watt	
237	**EC 90 flat** ∅90 mm, brushless, 90 Watt	

maxon gear

Page	Planetary and Spur gearheads	
240	**Standard specification**	
242	**GP 6 A** ∅6 mm, 0.002–0.03 Nm	
243	**GP 8 A** ∅8 mm, 0.01–0.1 Nm	
244	**GP 10 K** ∅10 mm, 0.005–0.1 Nm	
245	**GP 10 A** ∅10 mm, 0.01–0.15 Nm	
246	**GS 12 A** ∅12 mm, 0.01–0.03 Nm	
247	**GP 13 K** ∅13 mm, 0.05–0.15 Nm	
248	**GP 13 A** ∅13 mm, 0.2–0.35 Nm	
249	**GP 13 M** ∅13 mm, 0.05–0.275 Nm	**sterilizable**
250	**GS 16 K** ∅16 mm, 0.01–0.03 Nm	
251	**GS 16 A** ∅16 mm, 0.015–0.04 Nm	
252	**GS 16 V** ∅16 mm, 0.06–0.1 Nm	
253	**GS 16 VZ** ∅16 mm, 0.06–0.1 Nm	
254	**GP 16 A** ∅16 mm, 0.1–0.3 Nm	
255	**GP 16 C** ∅16 mm, 0.2–0.6 Nm	
256	**GP 16 M** ∅16 mm, 0.1–0.3 Nm	**sterilizable**
257	**GP 19 B** ∅19 mm, 0.1–0.3 Nm	
258	**GP 19 M** ∅19 mm, 0.1–0.135 Nm **sterilizable**	**NEW**
259	**GS 20 A** ∅20.3 mm, 0.06–0.25 Nm	
260	**GP 22 B** ∅22 mm, 0.1–0.3 Nm	
261	**GP 22 L** ∅22 mm, 0.2–0.6 Nm	
262	**GP 22 A** ∅22 mm, 0.5–1.0 Nm	
263	**GP 22 AR** ∅22 mm, 0.5 Nm	**NEW**
264–265	**GP 22 C** ∅22 mm, 0.5–2.0 Nm	
266	**GP 22 HP** ∅22 mm, 2.0–3.4 Nm	
267	**GP 22 HD** ∅22 mm, 2.0–4.0 Nm	**HD**
268	**GP 22 M** ∅22 mm, 0.5–2.0 Nm	**sterilizable**
269	**GS 24 A** ∅24 mm, 0.1 Nm	
270	**GP 26 A** ∅26 mm, 0.75–4.5 Nm	
271	**GS 30 A** ∅30 mm, 0.07–0.2 Nm	
272	**GP 32 BZ** ∅32 mm, 0.75–4.5 Nm	
273–274	**GP 32 A** ∅32 mm, 0.75–4.5 Nm	
275	**GP 32 AR** ∅32 mm, 0.75 Nm	
276–277	**GP 32 C** ∅32 mm, 1.0–6.0 Nm	
278	**GP 32 CR** ∅32 mm, 1.0 Nm	
279	**GP 32 HP** ∅32 mm, 4.0–8.0 Nm	
280	**GP 32 HD** ∅32 mm, 3.0–8.0 Nm	**HD**
281	**Koaxdrive KD 32** ∅32 mm, 1.0–4.5 Nm	
282	**GS 38 A** ∅38 mm, 0.1–0.6 Nm	
283–285	**GP 42 C** ∅42 mm, 3–15 Nm	
286	**GS 45 A** ∅45 mm, 0.5–2.0 Nm	
287–288	**GP 52 C** ∅52 mm, 4–30 Nm	
289	**GP 62 A** ∅62 mm, 8–50 Nm	
290	**GP 81 A** ∅81 mm, 20–120 Nm	

maxon spindle drive

Page	Spindle Drive	
293	**GP 6 S** ∅6 mm, metric spindle, ceramic	**NEW**
294	**GP 8 S** ∅8 mm, metric spindle	
295	**GP 8 S** ∅8 mm, metric spindle, ceramic	
296	**GP 16 S** ∅16 mm, ball screw	
297	**GP 16 S** ∅16 mm, metric spindle	
298	**GP 16 S** ∅16 mm, metric spindle, ceramic	
299	**GP 22 S** ∅22 mm, ball screw	
300	**GP 22 S** ∅22 mm, metric spindle	
301	**GP 32 S** ∅32 mm, ball screw	
302	**GP 32 S** ∅32 mm, metric spindle	
303	**GP 32 S** ∅32 mm, trapezoidal spindle	
304–306	**Options**	

maxon sensor

Page	Encoder and DC-Tacho	
308–310	**Encoder MILE** 256–6400 CPT, 2/3 channel	**NEW**
311	**Encoder 16 EASY** 128–1024 CPT, 3 channel	**NEW**
312–320	**Encoder MR** 16–1024 CPT, 2/3 channel	
321	**Encoder 8 OPT** 50 CPT, 2 channel	**NEW**
322	**Encoder SCH16F** 2000–3600 CPT, 3 channel	**NEW**
323	**Encoder 2RMHF** 3000–5000 CPT, 3 channel	**NEW**
324	**Encoder Enc 22** 100 CPT, 2 channel	
325–326	**Encoder HEDS 5540** 500 CPT, 3 channel	
327–330	**Encoder HEDL 5540** 500 CPT, 3 channel	
331–332	**Encoder HEDL 9140** 500 CPT, 3 channel	
333	**Encoder MEnc 10** 12 CPT, 2 channel	
334–335	**Encoder MEnc 13** 16 CPT, 2 channel	
336	**DC-Tacho DCT 22** 0.52 V	
337	**Resolver Res 26** 10 V	

maxon motor control

Page	Electronics for DC motors and EC motors	
340–344	**ESCON servo controllers**	**NEW**
345–346	**1-Q-EC Servoamplifier**	
347–351	**Positioning control unit EPOS2**	
352–354	**Positioning control unit EPOS2 P**	
355–357	**Positioning control unit EPOS3**	
358–360	**Positioning control unit MAXPOS**	**NEW**
361	**Summary maxon motor control**	
362–363	**Summary accessories**	

maxon compact drive

Page	
366–367	**MCD EPOS/MCD EPOS P**
368	**Accessories**

maxon accessories

Page	Accessories
370	**Brake AB 20** 24 VDC, 0.1 Nm
371–373	**Brake AB 28** 24 VDC, 0.4 Nm
374	**Brake AB 32** 24 VDC, 0.4 Nm
375	**Brake AB 41** 24 VDC, 2.0 Nm
376	**Brake AB 44** 24 VDC, 2.5 Nm
377	**End caps**
26	**Accessories overview**

maxon ceramic

Page	
380–382	**Innovative high-tech ceramic components**
383–385	**Material properties**
386	**Standard spindles**
387	**System-specific nuts**
388–389	**Standard axles**

maxon DC motor
Technology – short and to the point

The outstanding technical features of **maxon DC motors:**
- No magnetic cogging
- High acceleration thanks to a low mass inertia
- Low electromagnetic interference
- Low inductance
- High efficiency
- Linearity between voltage and speed
- Linearity between load and speed
- Linearity between load and current
- Small torque ripple thanks to multi-segment commutator
- Able to bear high overloads for short periods
- Compact design – small dimensions
- Multiple combination possibilities with gears as well as DC tachometers and encoders

Characteristics of the **maxon RE** range:
- High power density
- High-quality DC motor with NdFeB magnet
- High speeds and torques
- Robust design (metal flange)

Characteristics of the **maxon *A*-max** range:
- Good price/performance ratio
- DC motor with AlNiCo magnet
- Torsionally rigid shaft
- Automated manufacturing process

Characteristics of the **maxon *RE*-max** range:
- High-performance at low cost
- Combines rational manufacturing and design of the A-max motors with the higher power density of the NdFeB magnets
- Automated manufacturing process

Turning speed

The optimal operating speeds are between 4000 rpm and 9000 rpm depending on the motor size. Speeds of more than 20 000 rpm have been attained with some special versions.

A physical property of a DC motor is that, at a constant voltage, the speed is reduced with increasing loads. A good adaptation to the desired conditions is possible thanks to a variety of winding variants.

At lower speeds, a gear combination is often more favorable than a slowly turning motor.

Program

- **DCX-Program**
- **RE-Program**
- ***A*-max-Program**
- ***RE*-max-Program**

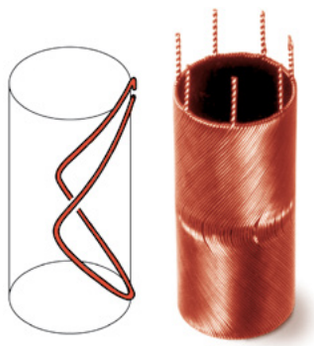

The maxon winding

The "heart" of the maxon motor is the world-wide patented ironless winding, System maxon®: This motor principle has very specific advantages. There is no magnetic detent and minimal electromagnetic interference. The efficiency of up to 90% exceeds that of other motor systems.

There are numerous winding variants for each motor type (see motor data sheets). They are differentiated by the wire diameter and number of turns. This results in various motor terminal resistances. The wire sizes used are between 32 µm and 0.45 mm, resulting in the different terminal resistances of the motors.
This influences the motor parameters that describe the transformation of electrical and mechanical energy (torque and speed constants). It allows you to select the motor that is best suited to your application.

The maximum permissible winding temperature in high-temperature applications is 125°C (155°C in special cases), otherwise 85°C.

Effects of wire gauge and number of windings are:

Low terminal resistance
- Low resistance winding
- Thick wire, few turns
- High starting currents
- High specific speed (rpm per volt)

High terminal resistance
- High resistance winding
- Thin wire, many turns
- Low starting currents
- Low specific speed (rpm per volt)

❶ Flange
❷ Permanent magnet
❸ Housing (magnetic return)
❹ Shaft
❺ Winding
❻ Commutator plate
❼ Commutator
❽ Graphite brushes
❾ Precious metal brushes
❿ Cover
⓫ Electrical connection
⓬ Ball bearing
⓭ Sintered sleeve bearing

Service life

A general statement about service life cannot be made due to many influencing factors. Service life can vary between more than 20 000 hours under favorable conditions, and less than 100 hours under extreme conditions (in rare cases). Roughly 1000 to 3000 hours are attained with average requirements.

The following have an influence:
1. The electric load: higher current loads result in greater electric wear. Therefore, it may be advisable to select a somewhat stronger motor for certain applications. We would be happy to advise you.
2. Speed: the higher the speed, the greater the mechanical wear.
3. Type of operation: extreme start/stop, left/right operation leads to a reduction in service life.
4. Environmental influences: temperature, humidity, vibration, type of installation, etc.
5. In the case of precious metal brushes, **the CLL concept** increases service life at higher loads and the benefits of precious metal brushes are retained.
6. Combinations **of graphite brushes** and ball bearings lead to a long service life, even under extreme conditions.

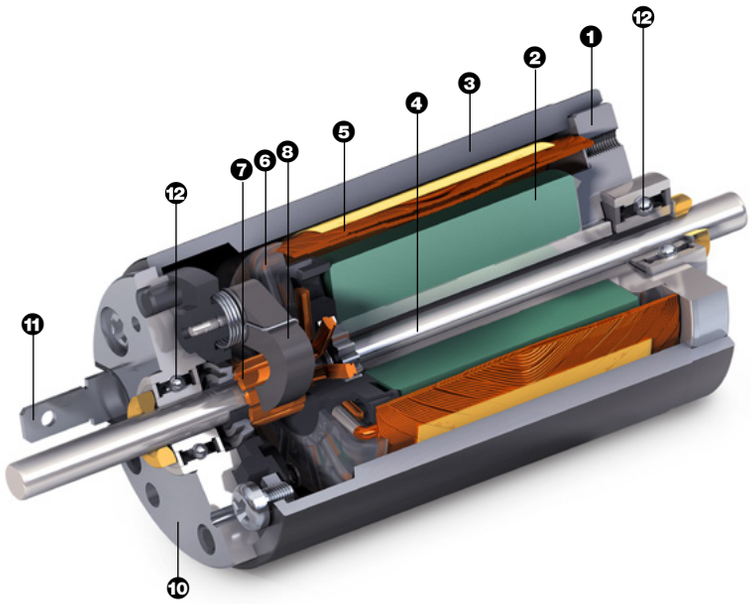

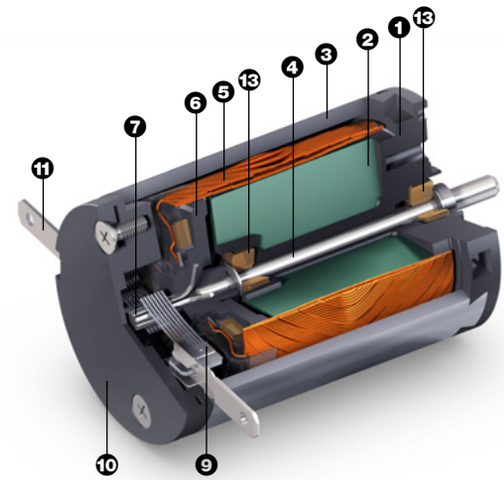

Mechanical commutation

Graphite brushes
In combination with copper commutators for the most rigorous applications.
More than 10 million cycles were attained in different applications.

Graphite brushes are typically used:
- In larger motors
- With high current loads
- In start/stop operation
- In reverse operation
- While controlling at pulsed power stage (PWM)

The special properties of **graphite brushes** can cause so-called spikes. They are visible in the commutation pattern. Despite the high-frequency interference caused by the spikes, these motors have become popular in applications with electronic controls. Please note, that the contact resistance of the graphite brushes changes dependent on load.

Precious metal brushes and commutator
Our precious metal combinations ensure a highly constant and low contact resistance, even after a prolonged standstill time. The motors work with very low starting voltages and electromagnetic interferences.

Precious metal brushes are typically used:
- In small motors
- In continuous operation
- With small current loads
- With battery operation
- In DC tachometers

The commutation pattern is uniform and free of spikes, as opposed to that of other motors. The combination of precious metal brushes and maxon rotor system results in minimum of high-frequency interference, which otherwise leads to major problems in electronical circuits. The motors need practically no interference suppression.

CLL concept
With precious metal commutation, the wear on commutators and brushes is caused mainly by sparks. The CLL concept suppresses spark generation to a large extent, thus greatly extending service life.
When driven with a pulsed power stage (PWM) higher no load currents occur and an unwanted motor heating can result.

For further explanations, please see page 79 or “The selection of high-precision microdrives” by Dr. Urs Kafader.

Commutation pattern with graphite brushes

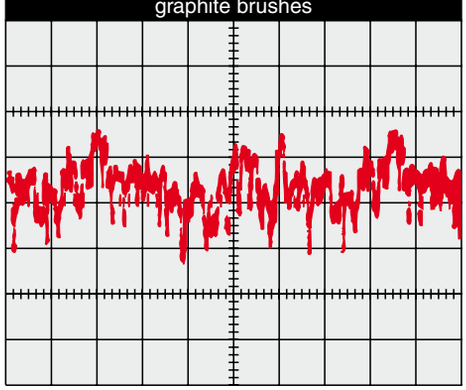

Commutation pattern with precious metal brushes

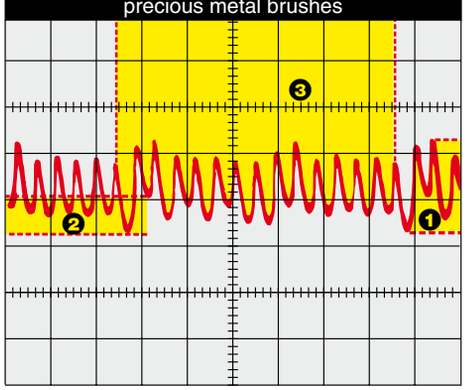

Commutation pattern
The commutation pattern shows the current pattern of a maxon DC motor over one motor revolution.
Please place a low-ohm series resistor in series with the motor (approx. 50 times smaller than the motor resistance). Observe the voltage drop over the resistor on the oscilloscope.

Legend
1. Ripple, actual peak-to-peak ripple
2. Modulation, attributable mainly to asymmetry in the magnetic field and in the winding.
3. Signal pattern within a revolution (number of peaks = twice the number of commutator segments)

maxon EC motor ironless winding
Technology – short and to the point

Characteristics of **maxon EC motors:**
- Brushless DC motor
- Long service life
- Highly efficient
- Linear motor characteristics, excellent control properties
- Ironless winding system maxon® with three phases in the stator
- Lowest electrical time constant and low inductance
- No detent
- Good heat dissipation, high overload capacity
- Rotating Neodymium permanent magnet with 1 or 2 pole pairs

Characteristics of the **maxon EC** range:
- Power optimized, with high speeds up to 100 000 rpm
- Robust design
- Various types: e.g. short/long, sterilizable
- Lowest residual imbalance

Characteristics of the **maxon *EC*-max** range:
- attractive price/performance ratio
- robust steel casing
- speeds of up to 20 000 rpm
- rotor with 1 pole pair

Characteristics of the **maxon *EC*-4pole** range:
- Highest power density thanks to rotor with 2 pole pairs
- Knitted winding system maxon® with optimised interconnection of the partial windings
- Speeds of up to 25 000 rpm
- High-quality magnetic return material to reduce eddy current losses
- Mechanical time constants below 3 ms

Bearings and service life

The long service life of the brushless design can only be properly exploited by using preloaded ball bearings.
- Bearings designed for tens of thousands of hours
- Service life is affected by maximum speed, residual unbalance and bearing load

Legend
The commutation angle is based on the length of a full commutation sequence (360°). The length of a commutation interval is therefore 60°.
The commutation rotor position is identical to the motor shaft position for motors with 1 pole pair. The values of the shaft position are halved for motors with 2 pole pairs.

Program

- **EC-Program**
- ***EC*-max-Program**
- ***EC*-4pole**

- **with Hall sensors**
- **sensorless**
- **with integrated electronics**
- **sterilizable**
- **Heavy Duty**

❶ Flange
❷ Housing
❸ Laminated steel stack
❹ Winding
❺ Permanent magnet
❻ Shaft
❼ Balancing disks
❽ Print with Hall sensors
❾ Control magnet
❿ Ball bearing

Electronical commutation

Block commutation
Rotor position is reported by three in-built Hall sensors. The Hall sensors arranged offset by 120° provide six different signal combinations per revolution. The three partial windings are now supplied in six different conducting phases in accordance with the sensor information. The current and voltage curves are block-shaped. The switching position of each electronic commutation is offset by 30° from the respective torque maximum.

Properties of block commutation
- Relatively simple and favorably priced electronics
- Torque ripple of 14%
- Controlled motor start-up
- High starting torques and accelerations possible
- The data of the maxon EC motors are determined with block commutation.

Possible applications
- Highly dynamic servo drives
- Start/stop operation
- Positioning tasks

Sensorless block commutation
The rotor position is determined using the progression of the induced voltage. The electronics evaluate the zero crossing of the induced voltage (EMF) and commute the motor current after a speed dependent pause (30° after EMF zero crossing).
The amplitude of the induced voltage is dependent on the speed. When stalled or at low speed, the voltage signal is too small and the zero crossing cannot be detected precisely. This is why special algorithms are required for starting (similar to stepper motor control).
To allow EC motors to be commuted without sensors in a Δ arrangement, a virtual star point is usually created in the electronics.

Properties of sensorless commutation
- Torque ripple of 14% (block commutation)
- No defined start-up
- Not suitable for low speeds
- Not suitable for dynamic applications

Possible applications
- Continuous operation at higher speeds
- Fans

Block commutation

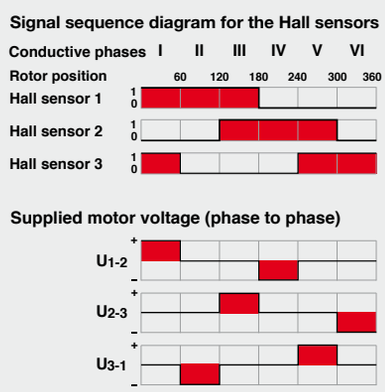

Sensorless commutation

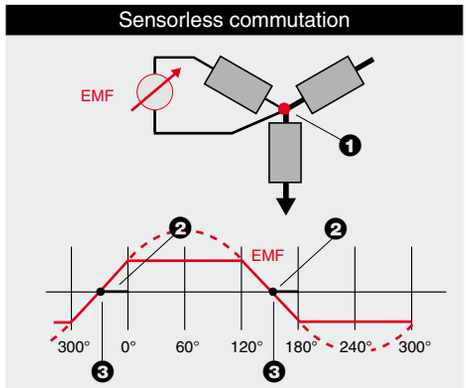

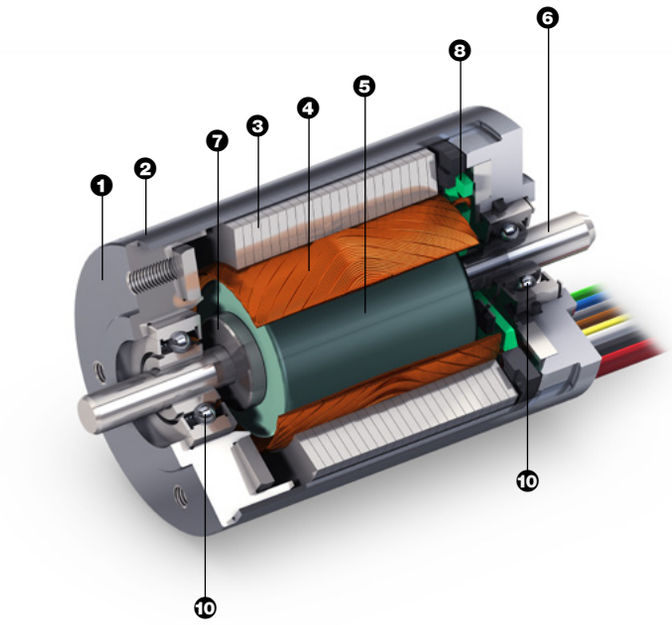

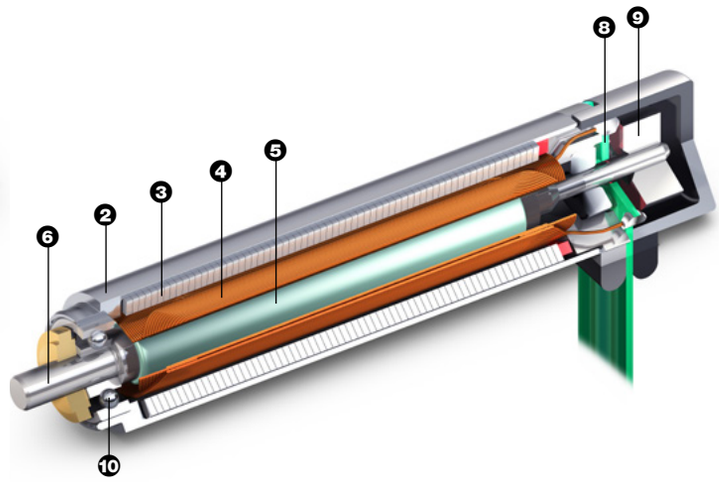

Sinusoidal commutation
The high resolution signals from the encoder or resolver are used for generating sine-shape motor currents in the electronics. The currents through the three motor windings are related to the rotor position and are shifted at each phase by 120° (sinusoidal commutation). This results in the very smooth, precise running of the motor and, in a very precise, high quality control.

Properties of sinusoidal commutation
- More expensive electronics
- No torque ripple
- Very smooth running, even at very low speeds
- Approx. 5% more continuous torque compared to block commutation

Possible applications
- Highly dynamic servo drives
- Positioning tasks

Currents in sine and block commutation

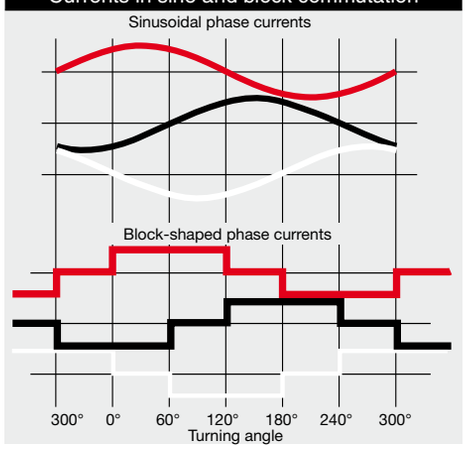

Hall sensor circuit

The open collector output of Hall sensors does not normally have its own pull-up resistance, as this is integral in maxon controllers. Any exceptions are specifically mentioned in the relevant motor data sheets.

Wiring diagram for Hall sensors

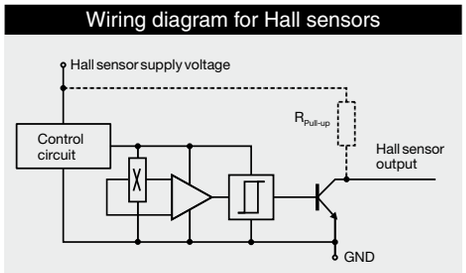

The power consumption of a Hall sensor is typically 4 mA (for output of Hall sensor = “HI”).

Legend
❶ Star point
❷ Time delay 30°
❸ Zero crossing of EMF

Winding arrangement

The maxon rhombic winding is divided into three partial windings, each shifted by 120°. The partial windings can be connected in two different manners - “Y” or “Δ”. This changes the speed and torque inversely proportional by the factor $\sqrt{3}$.
However, the winding arrangement does not play a decisive role in the selection of the motor. It is important that the motor-specific parameters (speed and torque constants) are in line with requirements.

«Circuito-Y»

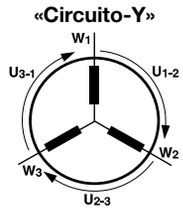

«Circuito-Δ»

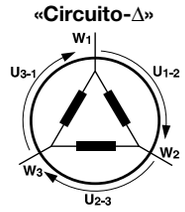

The maximum permissible winding temperature is 125°C or 155°C, depending on motor type.

For further explanations, please see page 169 or “The selection of high-precision microdrives” by Dr. Urs Kafader.

maxon EC motor iron-cored winding
Technology – short and to the point

Characteristics of **maxon EC flat motors** and **EC-i motors:**
- Brushless DC motor
- Long service life
- Flat design for when space is limited
- Comparatively high inertia
- Motor characteristics may vary from the strongly linear behaviour
- Hall sensor signals utilizable for simple speed and position control
- Winding with iron core and several teeth per phase in the stator
- Low detent torque
- Good heat dissipation, high overload capacity
- Multipole Neodymium permanent magnet
- Smaller commutation steps

Characteristics of **maxon EC flat motors:**
- Attractive price/performance ratio
- High torques due to external, multipole rotor
- Excellent heat dissipation at higher speeds thanks to open design

Characteristics of the **maxon EC-i** program:
- Highly dynamic due to internal, multipole rotor
- Mechanical time constants below 3 ms
- High torque density
- Speeds of up to 15 000 rpm

Bearings and service life

The long service life of the brushless design can only be properly exploited by using preloaded ball bearings.
- Bearings designed for tens of thousands of hours
- Service life is affected by maximum speed, residual imbalance and bearing load

Legend
The commutation angle is based on the length of a full commutation sequence (360°e). The length of a commutation interval is therefore 60°e. The values of the shaft position can be calculated from the commutation angle divided by the number of pole pairs.

Program

EC flat motor
- **with Hall sensors**
- **sensorless**
- **with integrated electronics**

1. Flange
2. Housing
3. Laminated steel stack
4. Winding
5. Permanent magnet
6. Shaft
7. Print with Hall sensors
8. Ball bearing
9. Spring (bearing preload)

Electronical commutation

Block commutation
Rotor position is reported by three built-in Hall sensors which deliver six different signal combinations per commutation sequence. The three phases are powered in six different conducting phases in line with this sensor information. The current and voltage curves are block-shaped. The switching position of every electronic commutation lies symmetrically around the respective torque maximum.

Properties of block commutation
- Relatively simple and favorably priced electronics
- Controlled motor start-up
- High starting torques and accelerations possible
- The data of the maxon EC motors are determined with block commutation.

Possible applications
- Highly dynamic servo drives
- Start/stop operation
- Positioning tasks

Sensorless block commutation
The rotor position is determined using the progression of the induced voltage. The electronics evaluate the zero crossing of the induced voltage (EMF) and commute the motor current after a speed dependent pause (30° after EMF zero crossing).
The amplitude of the induced voltage is dependent on the speed. When stalled or at low speed, the voltage signal is too small and the zero crossing cannot be detected precisely. This is why special algorithms are required for starting (similar to stepper motor control). To allow EC motors to be commuted without sensors in a Δ arrangement, a virtual star point is usually created in the electronics.

Properties of sensorless commutation
- No defined start-up
- Not suitable for low speeds
- Not suitable for dynamic applications

Possible applications
- Continuous operation at higher speeds
- Fans, pumps

Block commutation

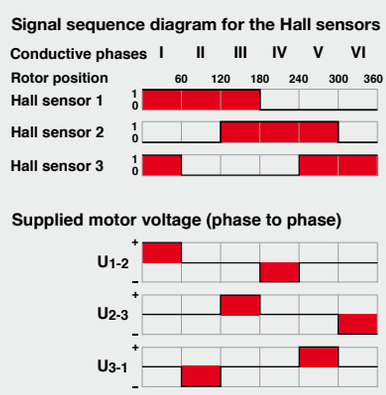

Sensorless commutation

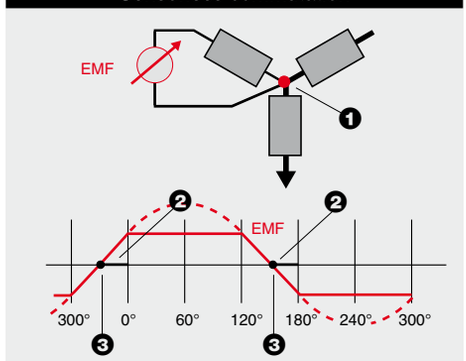

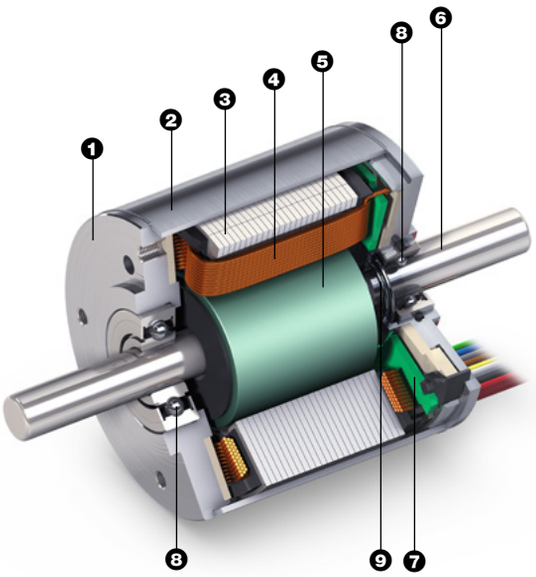

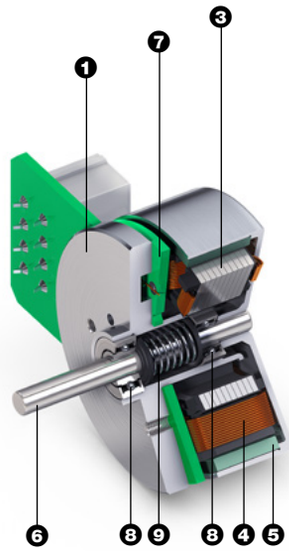

Sinusoidal commutation
Sinusoidal commutation for EC motors with slotted winding is basically possible, provided that an encoder can be mounted. The main benefit of sinusoidal commutation – the smooth operation – only comes into play to a limited degree due to the detent.

Integrated electronics

For motors with integrated electronics, the electronic commutation (mostly block commutation with Hall sensors) is built in. A speed controller and other functionalities can also be implemented.

Features
- Simple operation with DC voltage
- Fewer connections than with the EC motor
- No additional electronics required
- Output power reductions possible due to less space for power electronics

Hall sensor circuit

The open collector output of Hall sensors does not normally have its own pull-up resistance, as this is integral in maxon controllers. Any exceptions are specifically mentioned in the relevant motor data sheets.

Wiring diagram for Hall sensors

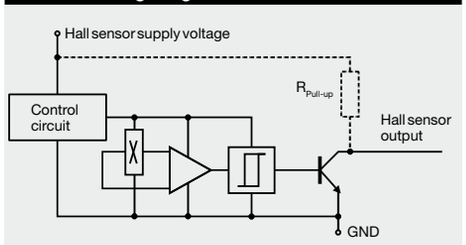

The power consumption of a Hall sensor is typically 4 mA (for output of Hall sensor = “HI”).

Winding arrangement

The winding is divided into 3 partial windings which have several stator teeth each. The partial windings can be connected in two different manners - “Y” or “Δ”. This changes the speed and torque inversely proportional by the factor $\sqrt{3}$.
However, the winding arrangement does not play a decisive role in the selection of the motor. It is important that the motor-specific parameters (speed and torque constants) are in line with requirements. Flat motors and EC-i are normally “Y”-circuited.

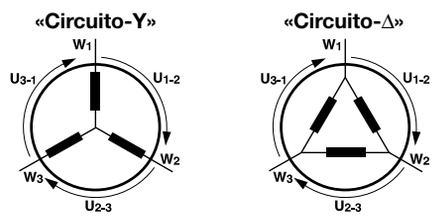

The maximum permissible winding temperature is 125°C. (EC-i 155°C).

Legend
❶ Star point
❷ Time delay 30°
❸ Zero crossing of EMF

For further explanations, please see page 169 or “The selection of high-precision microdrives” by Dr. Urs Kafader.

maxon gear
Technology – short and to the point

Gears

If mechanical power is required at a high torque and correspondingly reduced speed, a maxon precision gear is recommended. According to the gear ratio the output speed is reduced while the output torque is enhanced. For a more precise determination of the latter, efficiency must be taken into consideration.

Conversion
The conversion of speed and torque of the gear output *(n_L, M_L)* to the motor shaft *(n_{mot}, M_{mot})* follows the following equations:

$$n_{mot} = i \cdot n_L$$

$$M_{mot} = \frac{M_L}{i \cdot \eta}$$

where:
i: reduction
η: Gearhead efficiency

Program

- **Planetary gearhead**
- **Spur gearhead**
- **Koaxdrive**
- **Spindle drives**

❶ Output shaft
❷ Mounting flange
❸ Bearing of the output shaft
❹ Axial security
❺ Intermediate plate
❻ Cogwheel
❼ Planetary gearwheel
❽ Sun gearwheel
❾ Planet carrier
❿ Internal gear

Service life

The gears usually achieve 1000 to 3000 operating hours in continuous operation at the maximum permissible load and recommended input speed. Service life is significantly extended if these limits are not pushed.
If the speed drops below this threshold, the gearhead may be loaded with higher torques without compromising the life span. On the other hand, higher speeds and thus higher reduction ratios can be chosen if the torque limits are not fully exploited.
Factors affecting life span include:
- Exceeding maximum torque can lead to excessive wear.
- Local temperature peaks in the area of tooth contact can destroy the lubricant.
- Massively exceeding the gear input speed reduces the service life.
- Radial and axial loads on the bearing.

Temperature/lubrication

maxon gears are lubricated for life. The lubricants used are especially effective in the recommended temperature range. At higher or lower operating temperatures we offer recommendations for special lubricants.

Selection of gears

For the selection of the gearhead, the maximum transmittable power – the product of speed and torque – is decisive. It should be noted that the transmittable power depends on the number of gear stages.
The load torque should be below the nominal torque (max. continuous torque) of the gearhead $M_{N,G}$.

$$M_{N,G} \geq M_L$$

For short-term loading, the short-term torque of the gearhead must also be considered.
Where possible, the input speed of the gear $n_{max,G}$ should not be exceeded. This limits the maximum possible reduction i_{max} at a given operating speed. The following applies to the selection of the reduction *i*

$$i \leq i_{max} = \frac{n_{max,G}}{n_L}$$

If the gear is selected, the data conversed to the motor axis *(n_{mot}, M_{mot})* are used to select the motor. The maxon modular system defines the proper motor-gear combinations.

Spur gearhead

The gear consists of one or more stages. One stage represents the pairing of two cogwheels. The first cogwheel (pinion) is mounted directly on the motor shaft. The bearing of the output shaft is usually made of sintered material.
- Favorably priced
- For low torques
- Output torque up to 2 Nm
- Reduction ratios of 6:1 to 5752:1
- External - Ø12–45 mm
- Low noise level
- High efficiency

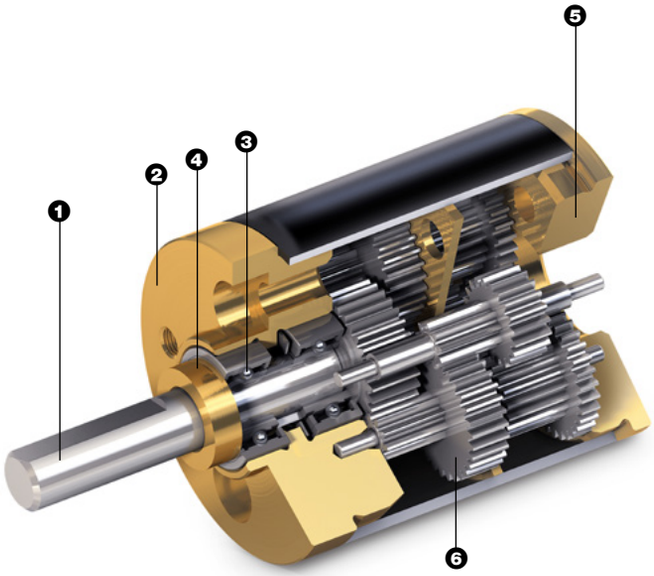

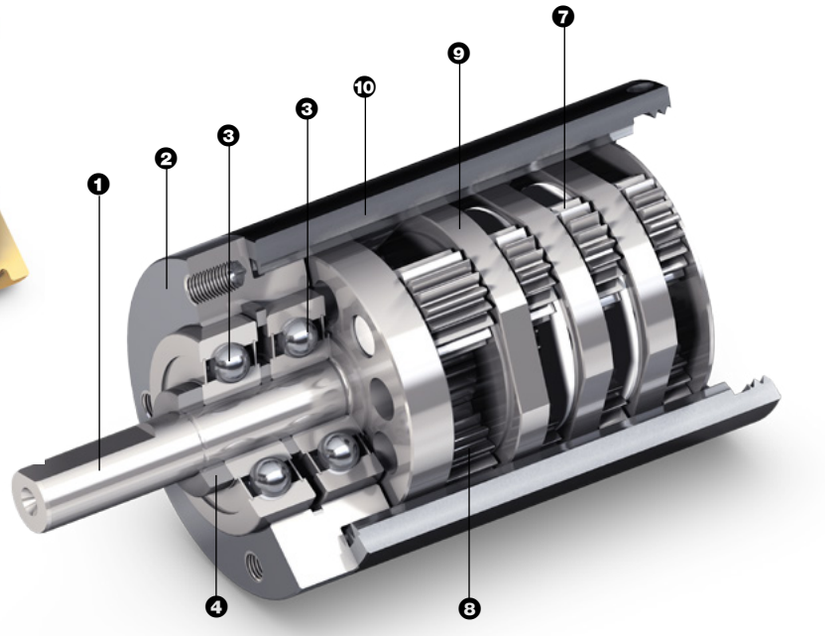

Planetary gearhead

Planetary gears are particularly suitable for the transfer of high torques. Large gearheads are normally fitted with ball bearings at gearhead output.
- For transferring high torques up to 180 Nm
- Reduction ratios of 4:1 to 6285:1
- External diameter 6–81 mm
- High performance in a small space
- High reduction ratio in a small space
- Concentric gear input and output

Plastic versions
Favorably priced and yet compact drives can be realized with plastic gears. The mechanical load is slightly smaller than that of metal designs, however, it is significantly higher than that of spur gears.

Ceramic versions
By using ceramic components in gearheads, the wear characteristics of critical components can be significantly improved. The result when compared to purely metal gearheads is:
- Longer service life
- Higher continuous torques
- Higher intermittent torques
- Higher input speeds

High power gearhead
Especially high output torques in the output stage of planetary gearheads can be achieved through the following measures
- Use of ceramic components
- 4 instead of 3 planet gears in the output stage
- Additional motor-side support of the output stage
- Reinforcement of the output bearings

Heavy duty gearhead
The HD (heavy duty) gearheads are characterized by their robust construction. The use of stainless steel and optimized welding joints enable use under the most extreme conditions.

Reduced backlash gearhead
The reduction in backlash is achieved through a patented preloading of the planet gears in the output stage. Despite the wear that occurs during operation, the gearhead backlash remains constantly low, unlike for gearheads in which the backlash reduction is achieved by low-tolerance manufacturing and material pairing.

Sterilizable gearhead
Sterilizable gearheads are characterized by the use of stainless steel and special lubricants. The bearing of the output shaft and the connection to the motor are designed so that fluid leaking into the gearhead is inhibited.

Koaxdrive

Noise reduction
Noise is primarily generated in the input stage of the gearhead. The following measures can help to reduce noise:
- Smaller input speeds and thus smaller relative velocity of the tooth flanks
- Input stage with plastic gears
- Use of a Koaxdrive gearhead

The quiet “Koaxdrive” combines worm and planetary gearing. In the first stage, a separately mounted worm drives the three offset planetary wheels which then mesh in the specially toothed internal geared wheel. All further stages are designed as a normal planetary gear:
- low noise
- high reduction ratio in the first stage
- other properties as planetary gears

maxon sensor
Technology – short and to the point

Sensors

maxon offers a series of sensors. Their characteristics are:

Digital incremental encoder
- Relative position signal suitable for positioning tasks
- Rotation direction recognition
- Speed information from number of pulses per time unit
- Standard solution for many applications

DC tachometer
- Analog speed signal
- Rotation direction recognition
- Not suitable for positioning tasks

Resolver
- Analog rotor position signal
- Analog speed signal
- Extensive evaluation electronics required in the control system
- For special solutions in conjunction with sinusoidal commutation in EC motors

Digital Incremental Encoder

Encoder signals
For further processing in the controller, the encoders deliver square-wave signals whose pulses can be counted for exact positioning or speed measurement. Channels A and B pick up phase shifted signals, which are compared with one another to determine the rotation direction. All maxon positioning systems evaluate the rising and falling signal edges. With regard to encoder number of pulses, this results in a four times higher positioning precision. This is what is referred to as quadcounts.
A "home" pulse (index channel I) can be used as a reference point for precise determination of rotation angle.
The line driver produces complementary signals $\overline{A}$, $\overline{B}$, $\overline{I}$ which help to eliminate interference on long signal lines. In addition, this electronic driver installed in the encoder improves signal quality by steeper signal edges.

Program

- **Digital MILE encoder**
- **Digital EASY encoder**
- **Digital MR encoder**
- **Digital Hall effect encoder**
- **Digital optical encoder**
- **Analog DC Tacho**
- **Analog Resolver**

1. End cap
2. Electrical connections motor and encoder
3. PCB
4. MR sensor
5. Graduated disk
6. Magnetic multi-pole wheel
7. Encoder housing
8. Solid measure
9. Flange
10. Sensor with housing
11. Encoder fork coupler

Magnetic principles

On the magnetic Encoder a small multipole permanent magnet sits on the motor shaft. The changes in the magnetic flow are recorded by sensors and supplied to the electronics as processed channel A and B. Magnetic encoders require a minimum of space.

MR encoder
- Sensor with magnetoresistive principle
- High counts per turn possible, thanks to interpolator
- Different number of pulses can be selected
- with/without index
- with/without line driver

MEnc
- Digital Hall sensors
- 2 channels A and B
- No line driver possible
- Low number of pulses

EASY encoder
- Integrated circuit with Hall sensor and interpolator
- Counts per turn programmable from 1 to 1024
- With index channel and RS422 line driver

QUAD encoder
- Digital Hall sensors
- 4 statuses per turn
- Line driver not possible

Optical principle

In the optical principle of the fork light barrier (example: HEDL, HEDS, SCH16F, 2RMHF, Enc22) an LED sends light through a finely resolved impulse disc, which is mounted on the motor shaft. The receiver (photo transistor) changes light/dark signals into corresponding electrical impulses that are amplified and processed in the electronics.

Characteristics
- High number of pulses
- Index channel and line driver possible
- Very high accuracy

Inductive principle

With inductive MILE encoders, a high-frequency alternating field is transformatively transmitted and thus angle dependant modulated, using a structured copper disk.

Characteristics
- Very robust against magnetic and electrical fields as well as contamination
- Very high speeds possible
- High precision. Interpolation errors are largely compensated for by a look-up table
- Index channel and line driver available
- Absolute interface (SSI) on request

Representation of the output signal of a digital encoder

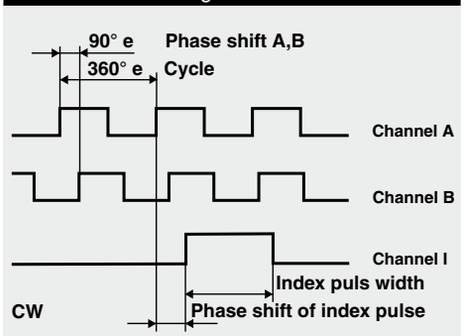

Schematic design of a magnetic encoder

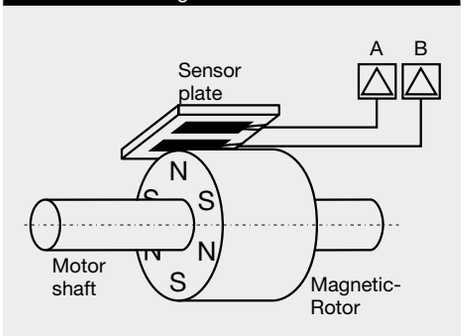

Schematic design of an opto-electronic encoder

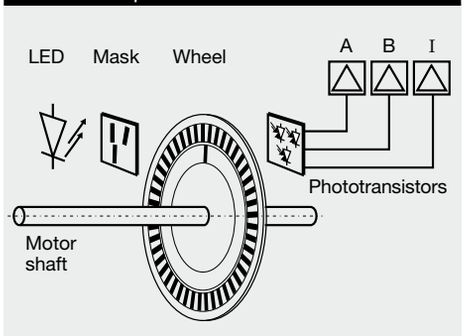

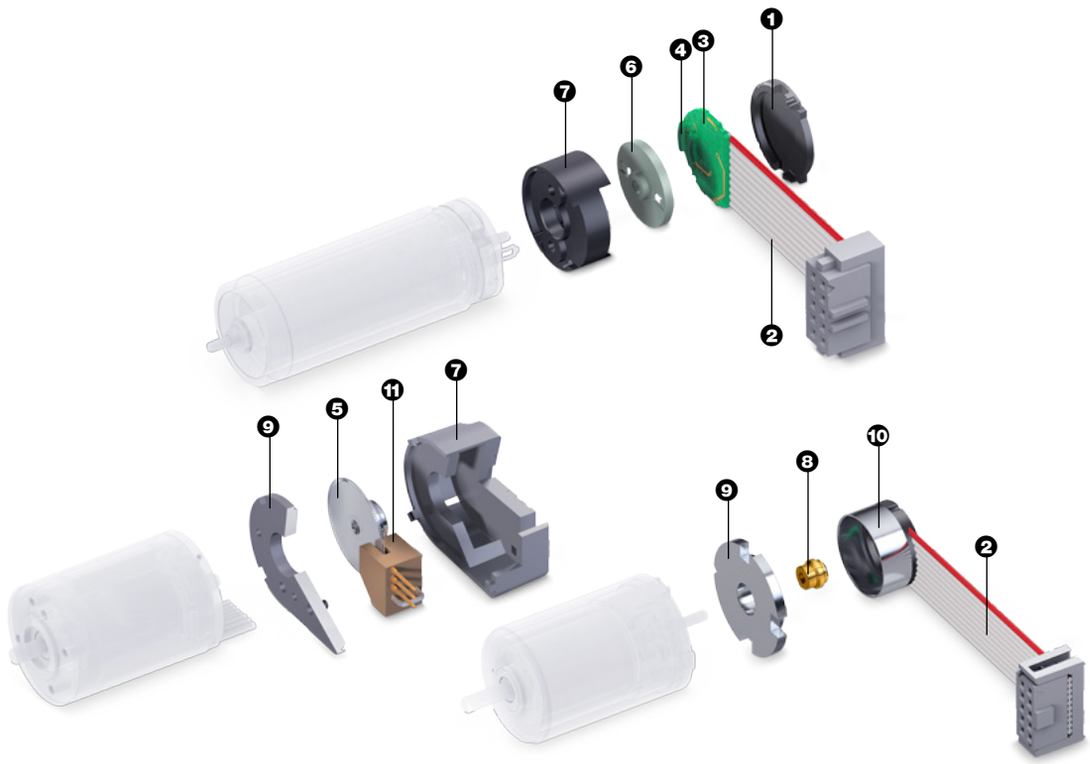

Tips on encoder selection

Principal features of the maxon incremental encoder are:
- The number of pulses per revolution (increments)
- The accuracy
- Use of an index channel
- The use of a line driver
- The maximum supported speed
- The suitability for special ambient conditions (dust, oil, magnetic fields, ionizing radiation)

Encoders and maxon controllers
- As a standard the maxon controllers are preset for encoders with 500 pulses per revolution.
- The input frequency of the controller electronics can limit the maximum possible counts per turn of the encoder.
- The higher the number of pulses and the higher the accuracy the better a smooth, jerk-free operation can be achieved even at low speeds.
- maxon controllers can be set for low or high speed operation and for encoders with a low or high number of pulses.

The following applies especially to positioning systems:
- The higher the number of pulses, the more precise the position that can be reached. At 500 pulses (2000 quadcounts) an angle resolution of 0.18° is achieved, which is usually much better than the precision of the mechanical drive components (e.g. due to gear play or elasticity of drive belts).
- Only encoders with an integrated line driver (RS422) should be used in positioning controls. This prevents electromagnetic interference signals from causing signal loss and accumulated positioning errors.
- Positioning applications often require the index channel of the encoder for precise reference point detection.

Schematic design of the inductive MILE encoder

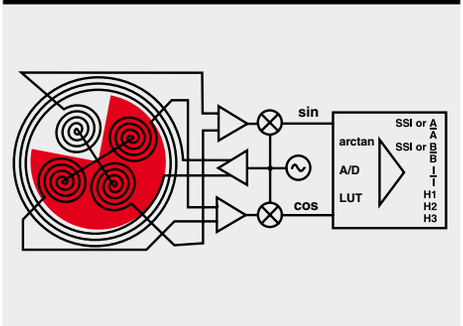

Recommendations on encoder selection

(✓) Conditionally applicable		QUAD	MEnc	MR	EASY	MILE	optical
1	very high speed	✓	✓	✓	✓	✓	
2	very low speed			(✓)	(✓)	✓	✓
3	precise position			(✓)	(✓)	(✓)	✓
4	line driver possible			✓	✓	✓	✓
5	index channel possible			✓	✓	✓	✓
6	compact design	✓	(✓)	✓	✓	✓	
7	dust, dirt, oil	✓	✓	✓	✓	✓	
8	External magnetic fields	(✓)	(✓)		(✓)	✓	✓
9	ionising radiation		✓				

DC Tacho

In principle every maxon DC motor can be used as a DC tacho. For motor-tacho combinations, we offer a DC tachometer, whereby the tacho rotor is mounted directly on the motor shaft.

Characteristics
- The output DC voltage is proportional to the speed thanks to the precious metal brushes
- AlNiCo magnet for high signal stability with temperature fluctuations
- No additional tacho bearings or friction
- No couplings, high mechanical resonance frequency

Resolver

The resolver is mounted on the motor's through shaft and adjusted according to the magnetic field of the motor rotor. The resolver has a rotating primary coil (rotor) and two secondary coils (stator) offset by 90°. An alternating current connected to the primary coil is transferred to the two secondary coils. The amplitudes of the secondary voltages are sin φ and cos φ, where φ is the rotation angle.

Characteristics
- Robust, for industrial use
- Long service life
- No mechanical wear
- Output signal can be transmitted over long distances without problems
- No sensitive electronics
- Special signal evaluation required
- Only one sensor for position and speed information
- EC motors with resolver are supplied without Hall sensors

maxon motor control
Technology – short and to the point

The **maxon motor control** program contains servo amplifiers for controlling the fast reacting maxon DC and EC motors.

Program

- **ESCON: 4-Q speed and current controller for DC and EC motors**
- **EPOS: Position controller for DC and EC motors**

Motor type
– maxon DC motor
– maxon EC motor with or without sensor
Type of control
– Speed
– Position
– Current
Feedback
– Encoder
– DC Tacho
– IxR compensation
– Hall sensors
Set value specification
– Analog voltage
– Digitally via field bus

Controlled variables

Speed control
The function of the speed servo amplifier is to keep the prescribed motor speed constant and independent of load changes. To achieve this, the set value (desired speed) is continuously compared with the actual value (actual speed) in the control electronics of the servo amplifier. The controller difference determined in this way is used by the controller to regulate the power stage of the servo amplifier in such a manner that the motor reduces the controller difference. This represents a closed speed regulating circuit.

Position control
The positioning control ensures a match between the currently measured position with a target position, by providing the motor with the corresponding correction values, as with a speed controller. The position data are usually obtained from a digital encoder.

Current control
The current control provides the motor with a current proportional to the set value. Accordingly, the motor torque changes proportionally to the set value.
The current controller also improves the dynamics of a superior positioning or speed control circuit.

Digital encoder control

The motor is equipped with a digital encoder that provides a certain number of pulses per revolution. The turning direction is detected with the square pulses of channels A and B offset by 90 electric degrees.
- Digital encoders are often found in positioning controls, in order to derive and measure the travel or angle.
- Digital encoders are not subject to mechanical wear.
- In conjunction with digital controllers there are no drift effects.
- If Hall sensor signals of an EC motor are used for control, this corresponds to an encoder with low resolution.

IxR compensation

The motor is provided with a voltage that is proportional to the applied speed set value. The speed would drop with increasing motor load. The compensation circuitry increases the output voltage with increasing motor current. The compensation must be adjusted to the terminal resistance of the motor which depends on temperature and load.

The attainable speed precision of such a system is subject to limits in the percent range.
- Favorably priced and space-saving
- No tacho-generator or encoder required
- Less precise control when there is a load change
- Only analog speed control possible
- Ideal for low-cost applications without high demands on speed accuracy

Principle of a control circuit

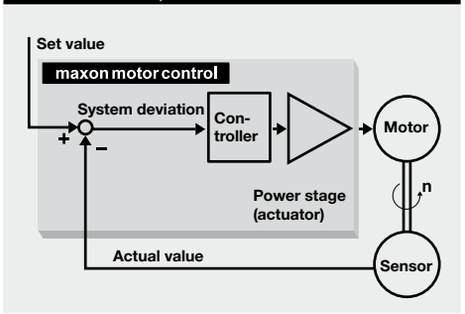

Principle: Encoder control

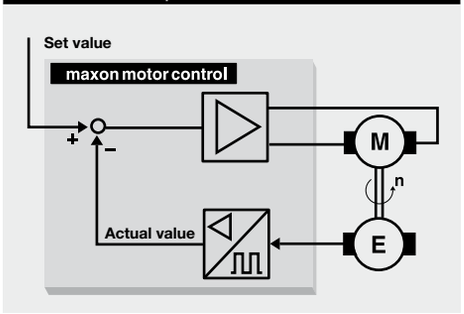

Principle: IxR compensation

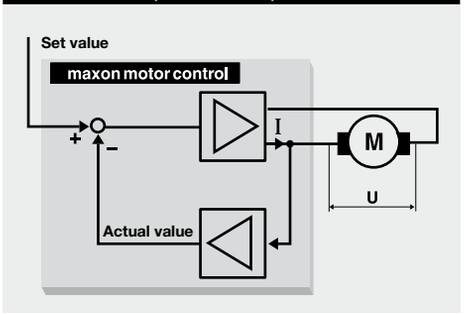

DC tacho control

The motor must be equipped with a DC tachometer that provides a speed proportional signal. In the maxon modular system, the tachometer rotor is mounted directly on the through motor shaft, resulting in a high resonant frequency.
- Classical solution of a very precise control
- Limited service life of the DC tacho generator
- Not suitable for positioning tasks
- Only for analog controllers
- Analog feedback signal
- Ideal for stringent demands on speed dynamics

Set value specification

Servo controllers (speed and current controllers) are usually designed for analog specification of set values. Alternatively, PWM signals or fixed set values are also possible.

In the case of position controllers (motion controllers), the set values are usually specified by means of digital commands that are transmitted to the controller using a field bus telegram (e.g. RS232, USB, CANopen, EtherCAT).

Operating quadrants

4-Q operation
- Controlled motor operation and braking operation in both rotation directions
- A must for positioning tasks

1-Q operation
- Only motor operation (Quadrant I or Quadrant III)
- Direction reverse via digital signal
- Typical: amplifier for EC motors

Timed 4-Q power stages

To control the power stage transistors, the maxon controllers use a 3-level pulse width modulation (PWM). The voltage present at the motor switches between the supply voltage and 0 V at short intervals (50 kHz and more). If the Off interval gets larger at the cost of the On interval, the decisive average voltage value (pulse width modulation) and motor speed drops. If the motor voltage is negative, the supply voltage is applied with reversed polarity.

Properties of the 3-level PWM power stage in contrast to linear control
- More complex power stage
- Smoothing of the current ripple by means of auxiliary chokes (integrated into maxon controllers)
- Only a small amount of energy is converted to heat.
- High efficiency

The 4-quadrant operation allows controlled and dynamic motor operation and brake operation in two directions of rotation (all 4 quadrants). 4-quadrant operation is a prerequisite for positioning tasks.

For further explanations, please see page 365.

Principle: DC tachometer control

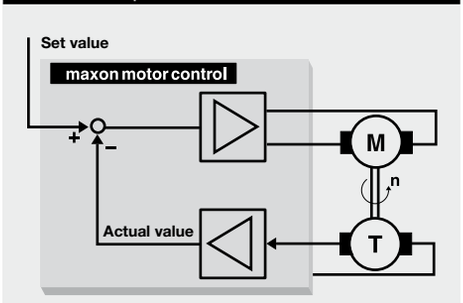

Operation quadrants

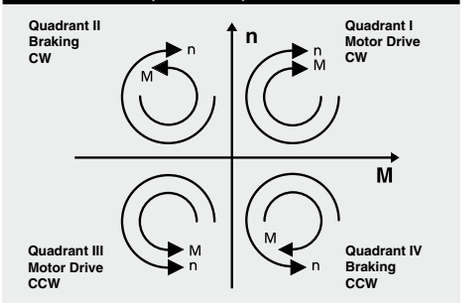

Principle: Pulsed power amplifier

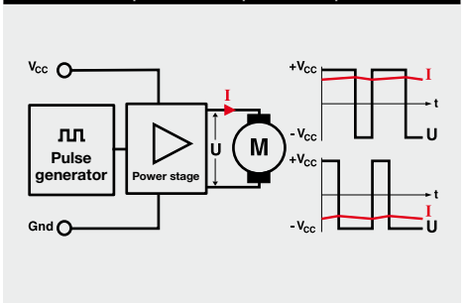

maxon DC motor and maxon EC motor
Key information

The motor as an energy converter

The electrical motor converts electrical power P_{el} (current I_{mot} and voltage U_{mot}) into mechanical power P_{mech} (speed n and torque M). The losses that arise are divided into frictional losses, attributable to P_{mech} and in Joule power losses P_J of the winding (resistance R). Iron losses do not occur in the coreless maxon DC motors. In maxon EC motors, they are treated formally like an additional friction torque. The power balance can therefore be formulated as:

$$P_{el} = P_{mech} + P_J$$

The detailed result is as follows

$$U_{mot} \cdot I_{mot} = \frac{\pi}{30\,000}\, n \cdot M + R \cdot I_{mot}^{\,2}$$

Electromechanical motor constants
The geometric arrangement of the magnetic circuit and winding defines in detail how the motor converts the electrical input power (current, voltage) into mechanical output power (speed, torque). Two important characteristic values of this energy conversion are the speed constant k_n and the torque constant k_M. The speed constant combines the speed n with the voltage induced in the winding U_{ind} (= EMF). U_{ind} is proportional to the speed; the following applies:

$$n = k_n \cdot U_{ind}$$

Similarly, the torque constant links the mechanical torque M with the electrical current I_{mot}.

$$M = k_M \cdot I_{mot}$$

The main point of this proportionality is that torque and current are equivalent for the maxon motor.
The current axis in the motor diagrams is therefore shown as parallel to the torque axis as well.

See also: Technology – short and to the point, explanation of the motor

Units
In all formulas, the variables are to be used in the units according to the catalog (cf. physical variables and their units on page 48).

The following applies in particular:
– All torques in mNm
– All currents in A (even no load currents)
– Speeds (rpm) instead of angular velocity (rad/s)

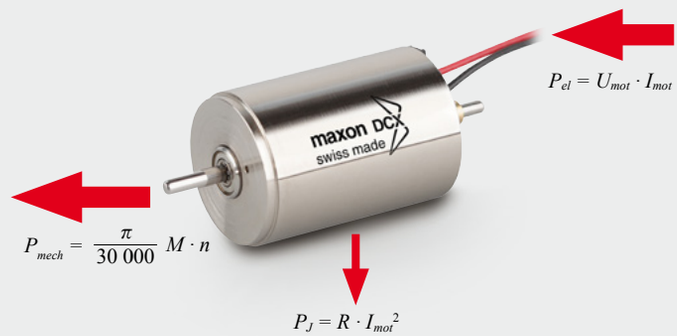

Motor constants
Speed constant k_n and torque constant k_M are not independent of one another. The following applies:

$$k_n \cdot k_M = \frac{30\,000}{\pi}$$

The speed constant is also called specific speed. Specific voltage, generator or voltage constants are mainly the reciprocal value of the speed constant and describe the voltage induced in the motor per speed. The torque constant is also called specific torque. The reciprocal value is called specific current or current constant.

Motor diagrams

A diagram can be drawn for every maxon DC and EC motor, from which key motor data can be taken. Although tolerances and temperature influences are not taken into consideration, the values are sufficient for a first estimation in most applications. In the diagram, speed n, current I_{mot}, power output P_2 and efficiency η are applied as a function of torque M at constant voltage U_{mot}.

Speed-torque line
This curve describes the mechanical behavior of the motor at a constant voltage U_{mot}:
– Speed decreases linearly with increasing torque.
– The faster the motor turns, the less torque it can provide.
The curve can be described with the help of the two end points, no load speed n_0 and stall torque M_H (cf. lines 2 and 7 in the motor data).
DC motors can be operated at any voltage. No load speed and stall torque change proportionally to the applied voltage. This is equivalent to a parallel shift of the speed-torque line in the diagram. Between the no load speed and voltage, the following proportionality applies in good approximation

$$n_0 \approx k_n \cdot U_{mot}$$

where k_n is the speed constant (line 13 of the motor data).

Independent of the voltage, the speed-torque line is described most practically by the slope or gradient of the curve (line 14 of the motor data).

$$\frac{\Delta n}{\Delta M} = \frac{n_0}{M_H}$$

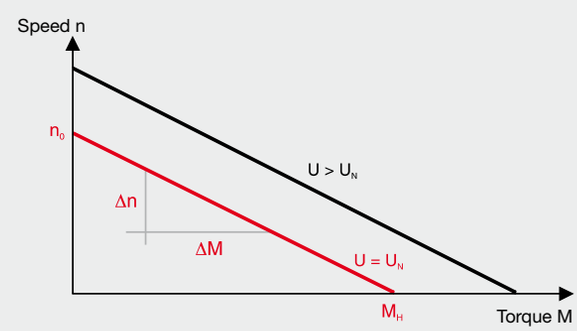

Derivation of the speed-torque line
The following occurs if one replaces current I_{mot} with torque M using the torque constant in the detailed power balance:

$$U_{mot} \cdot \frac{M}{k_M} = \frac{\pi}{30\,000}\, n \cdot M + R \cdot \left(\frac{M}{k_M}\right)^2$$

Transformed and taking account of the close relationship of k_M and k_n, an equation is produced of a straight line between speed n and torque M.

$$n = k_n \cdot U_{mot} - \frac{30\,000}{\pi} \cdot \frac{R}{k_M^{\,2}} \cdot M$$

or with the gradient and the no load speed n_0

$$n = n_0 - \frac{\Delta n}{\Delta M} \cdot M$$

The speed-torque gradient is one of the most informative pieces of data and allows direct comparison between different motors. The smaller the speed-torque gradient, the less sensitive the speed reacts to torque (load) changes and the stronger the motor. With the maxon motor, the speed-torque gradient within the winding series of a motor type (i.e. on one catalog page) remains practically constant.

Current gradient
The equivalence of current to torque is shown by an axis parallel to the torque: more current flowing through the motor produces more torque. The current scale is determined by the two points no load current I_0 and starting current I_A (lines 3 and 8 of motor data).
The no load current is equivalent to the friction torque M_R, that describes the internal friction in the bearings and commutation system.

$$M_R = k_M \cdot I_0$$

In the maxon EC motor, there are strong, speed dependent iron losses in the stator iron stack instead of friction losses in the commutation system.

The motors develop the highest torque when starting. It is many times greater than the normal operating torque, so the current uptake is the greatest as well.
The following applies for the stall torque M_H and starting current I_A

$$M_H = k_M \cdot I_A$$

Efficiency curve
The efficiency η describes the relationship of mechanical power delivered to electrical power consumed.

$$\eta = \frac{\pi}{30\,000} \cdot \frac{n \cdot (M - M_R)}{U_{mot} \cdot I_{mot}}$$

One can see that at constant applied voltage U and due to the proportionality of torque and current, the efficiency increases with increasing speed (decreasing torque). At low torques, friction losses become increasingly significant and efficiency rapidly approaches zero. Maximum efficiency (line 9 of motor data) is calculated using the starting current and no load current and is dependent on voltage.

$$\eta_{max} = \left(1 - \sqrt{\frac{I_0}{I_A}}\right)^2$$

Maximum efficiency and maximum output power do not occur at the same torque.

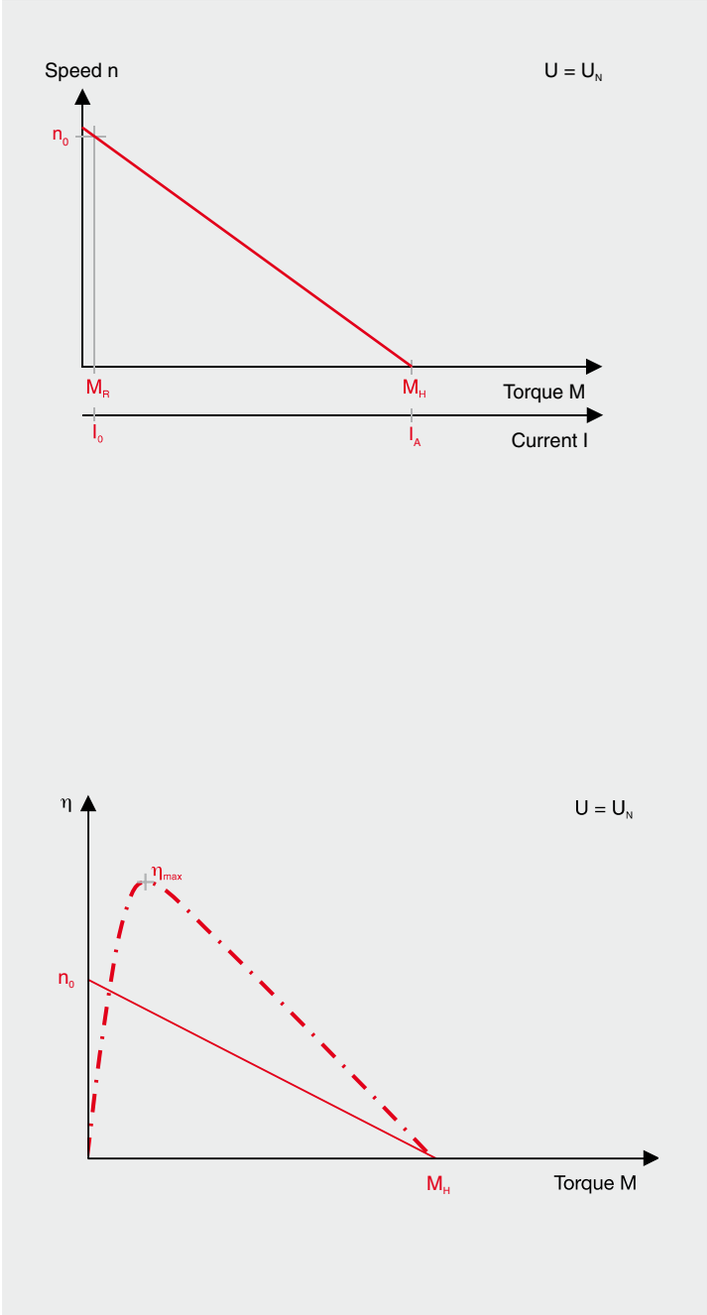

Rated operating point

The rated operating point is an ideal operating point for the motor and derives from operation at nominal voltage U_N (line 1 of motor data) and nominal current I_N (line 6). The nominal torque M_N produced (line 5) in this operating point follows from the equivalence of torque and current.

$$M_N \approx k_M \cdot (I_N - I_0)$$

Nominal speed n_N (line 4) is reached in line with the speed gradient.
The choice of nominal voltage follows from considerations of where the maximum no load speed should be. The nominal current derives from the motor's thermally maximum permissible continuous current.

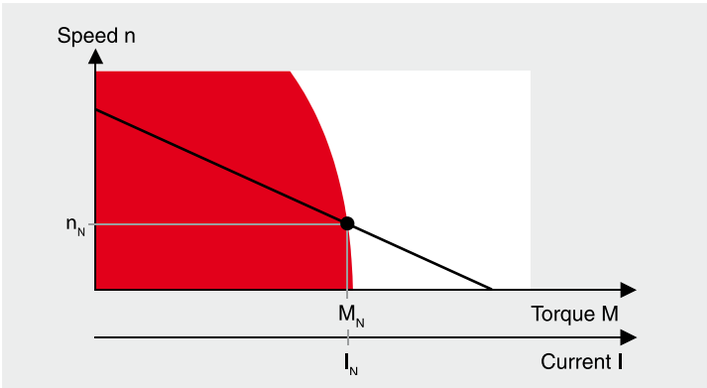

Motor diagrams, operating ranges

The catalogue contains a diagram of every maxon DC and EC motor type that shows the operating ranges of the different winding types using a typical motor.

Permanent operating range
The two criteria “maximum continuous torque” and “maximum permis- sible speed” limit the continuous operating range. Operating points within this range are not critical thermally and do not generally cause increased wear of the commutation system.

Short-term operating range
The motor may only be loaded with the maximum continuous current for thermal reasons. However, temporary higher currents (torques) are allowed. As long as the winding temperature is below the critical value, the winding will not be damaged. Phases with increased currents are time limited. A measure of how long the temporary overload can last is provided by the thermal time constant of the winding (line 19 of the motor data). The magnitude of the times with overload ranges from several seconds for the smallest motors (6 mm to 13 mm diameter) up to roughly one minute for the largest (60 mm to 90 mm diameter). The calculation of the exact overload time is heavily dependent on the motor current and the rotor’s starting temperature.

Maximum continuous current, maximum continuous torque
The Jule power losses heat up the winding. The heat produced must be able to dissipate and the maximum rotor temperature (line 22 of the motor data) should not be exceeded. This results in a maximum continuous current, at which the maximum winding temperature is attained under standard conditions (25°C ambient temperature, no heat dissipation via the flange, free air circulation). Higher motor currents cause excessive winding temperatures.
The nominal current is selected so that it corresponds to this maximum permissible constant current. It depends heavily on the winding. These thin wire windings have lower nominal current levels than thick ones. With very low resistive windings, the brush system’s capacity can further limit the permissible constant current. With graphite brush motors, friction losses increase sharply at higher speeds. With EC motors, eddy current losses increase in the return as speed increases and produce additional heat. The maximum permissible continuous current decreases at faster speeds accordingly.
The nominal torque allocated to the nominal current is almost constant within a motor type’s winding range and represents a characteristic size of the motor type.

The maximum permissible speed
for DC motors is primarily limited by the commutation system. The commutator and brushes wear more rapidly at very high speeds.
The reasons are:
– Increased mechanical wear because of the large traveled path of the commutator
– Increased electro-erosion because of brush vibration and spark formation.

A further reason for limiting the speed is the rotor’s residual mechanical imbalance which shortens the service life of the bearings. Higher speeds than the limit speed n_{max} (line 23) are possible, however, they are “paid for” by a reduced service life expectancy. The maximum permissible speed for the EC motor is calculated based on service life considerations of the ball bearings (at least 20 000 hours) at the maximum residual imbalance and bearing load.

Maximum winding temperature
The motor current causes the winding to heat up due to the winding’s resistance. To prevent the motor from overheating, this heat must dissipate to the environment via the stator. The coreless winding is the thermally critical point. The maximum rotor temperature must not be exceeded, even temporarily. With graphite brush motors and EC motors which tend to have higher current loads, the maximum rotor temperature is 125°C (in individual cases up to 155°C). Motors with precious metal commutators only allow lower current loads, so that the rotor temperatures must not exceed 85°C. Favourable mounting conditions, such as good air circulation or cooling plates, can significantly lower temperatures.

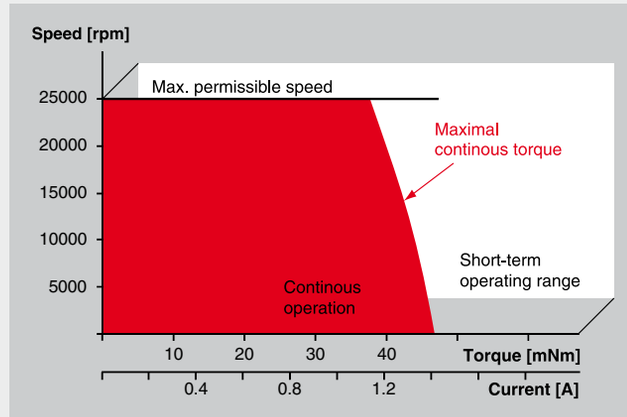

Operating range diagram

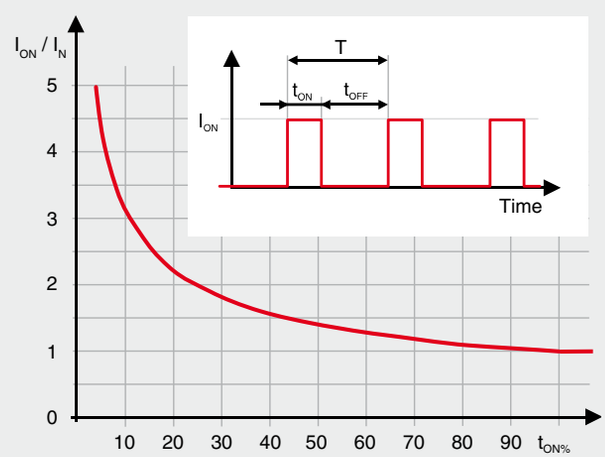

ON	Motor in operation
OFF	Motor stationary
I_{ON}	Max. peak current
I_N	Max. permissible continuous current (line 6)
t_{ON}	ON time *[s]*, should not exeed τ_w (line 19)
T	Cycle time $t_{ON} + t_{OFF}$ *[s]*
$t_{ON\%}$	Duty cycle as percentage of cycle time. The motor may be overloaded by the relationship I_{ON} / I_N at X % of the total cycle time.

$$I_{on} = I_N \sqrt{\frac{T}{t_{ON}}}$$

maxon flat motor

Multipole EC motors, such as maxon flat motors, require a greater number of commutation steps for a motor revolution (6 x number of pole pairs). Due to the wound stator teeth they have a higher terminal inductance than motors with an ironless winding. As a result at higher speed, the current cannot develop fully during the correspondingly short commutation intervals. Therefore, the apparent torque produced is lower. Current is also fed back into the controller's power stage.
As a result, motor behaviour deviates from the ideal linear speed-torque gradient. The apparent speed-torque gradient depends on voltage and speed: The gradient is steeper at higher speeds.
Mostly, flat motors are operated in the continuous operation range where the achievable speed-torque gradient at nominal voltage can be approximated by a straight line between no load speed and nominal operating point. The achievable speed-torque gradient is approximately.

$$\frac{\Delta n}{\Delta M} \approx \frac{n_0 - n_N}{M_N}$$

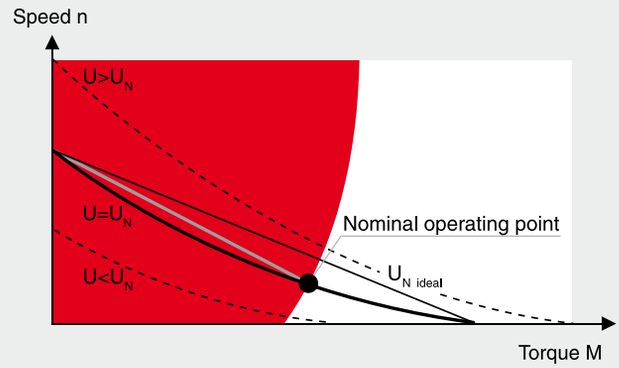

Acceleration

In accordance with the electrical boundary conditions (power supply, control, battery), a distinction is principally made between two different starting processes:
– Start at constant voltage (without current limitation)
– Start at constant current (with current limitation)

Start under constant current
A current limit always means that the motor can only deliver a limited torque. In the speed-torque diagram, the speed increases on a vertical line with a constant torque. Acceleration is also constant, thus simplifying the calculation. Start at constant current is usually found in applications with servo amplifiers, where acceleration torques are limited by the amplifier's peak current.

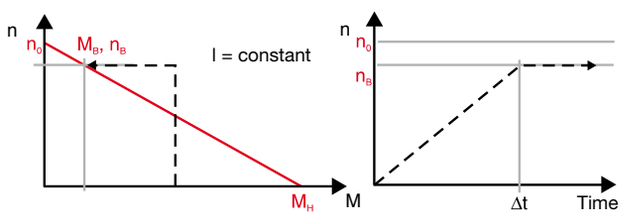

– Angular acceleration α (in rad / s²) at constant current *I* or constant torque *M* with an additional load of inertia J_L:

$$\alpha = 10^4 \cdot \frac{k_M \cdot I_{mot}}{J_R + J_L} = 10^4 \cdot \frac{M}{J_R + J_L}$$

– Run-up time Δt (in ms) at a speed change Δn with an additional load inertia J_L:

$$\Delta t = \frac{\pi}{300} \cdot \Delta n \cdot \frac{J_R + J_L}{k_M \cdot I_{mot}}$$

(all variables in units according to the catalog)

Start with constant terminal voltage
Here, the speed increases from the stall torque along the speed-torque line. The greatest torque and thus the greatest acceleration is effective at the start. The faster the motor turns, the lower the acceleration. The speed increases more slowly. This exponentially flattening increase is described by the mechanical time constant τ_m (line 15 of the motor data). After this time, the rotor at the free shaft end has attained 63% of the no load speed. After roughly three mechanical time constants, the rotor has almost reached the no load speed.

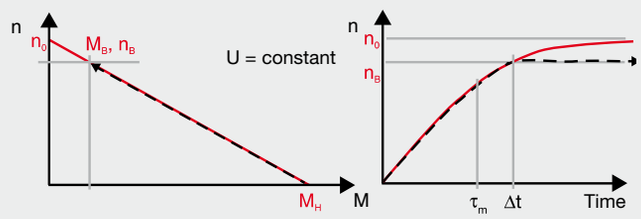

– Mechanical time constant τ_m (in ms) of the unloaded motor:

$$\tau_m = 100 \cdot \frac{J_R \cdot R}{k_M^{\,2}}$$

– Mechanical time constants τ_m' (in ms) with an additional load inertia J_L:

$$\tau_m' = 100 \cdot \frac{J_R \cdot R}{k_M^{\,2}} \left(1 + \frac{J_L}{J_R}\right)$$

– Maximum angular acceleration α_{max} (in rad / s²) of the unloaded motor:

$$\alpha_{max} = 10^4 \cdot \frac{M_H}{J_R}$$

– Maximum angular acceleration α_{max} (in rad / s²) with an additional load inertia J_L:

$$\alpha_{max} = 10^4 \cdot \frac{M_H}{J_R + J_L}$$

– Run-up time (in ms) at constant voltage up to the operating point (M_L, n_L):

$$\Delta t = \tau_m' \cdot In \left(\frac{\left(1 - \frac{M_L + M_R}{M_H}\right) \cdot n_0}{\left(1 - \frac{M_L + M_R}{M_H}\right) \cdot n_0 - n_L} \right)$$

Tolerances

Tolerances must be considered in critical ranges. The possible deviations of the mechanical dimensions can be found in the overview drawings. The motor data are average values: the adjacent diagram shows the effect of tolerances on the curve characteristics. They are mainly caused by differences in the magnetic field strength and in wire resistance, and not so much by mechanical influences. The changes are heavily exaggerated in the diagram and are simplified to improve understanding. It is clear, however, that in the motor's actual operating range, the tolerance range is more limited than at start or at no load. Our computer sheets contain all detailed specifications.

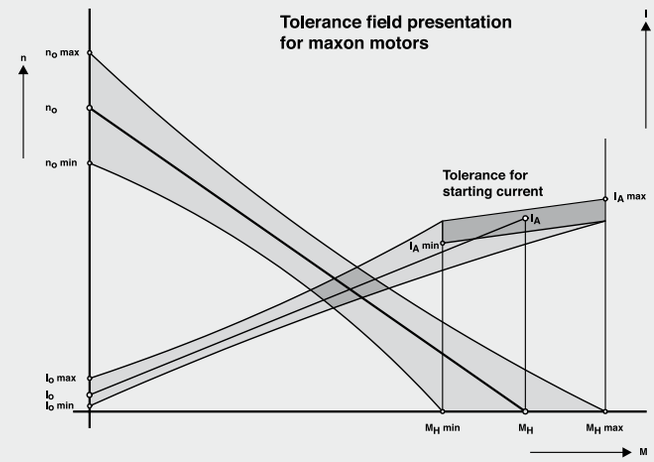

Calibrating
The tolerances can be limited by controlled de-magnetization of the motors. Motor data can be accurately specified down to 1 to 3%. However, the motor characteristic values lie in the lower portion of the standard tolerance range.

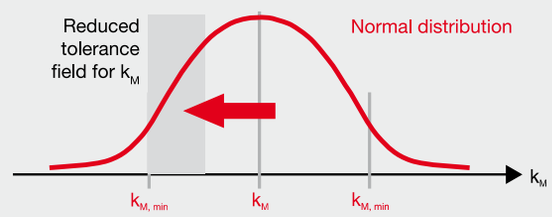

Thermal behavior

The Joule power losses P_J in the winding determine heating of the motor. This heat energy must be dissipated via the surfaces of the winding and motor. The increase ΔT_W of the winding temperature T_W with regard to the ambient temperature arises from heat losses P_J and thermal resistances R_{th1} and R_{th2}.

$$T_W - T_U = \Delta T_W = (R_{th1} + R_{th2}) \cdot P_J$$

Here, thermal resistance R_{th1} relates to the heat transfer between the winding and the stator (magnetic return and magnet), whereas R_{th2} describes the heat transfer from the housing to the environment. Mounting the motor on a heat dissipating chassis noticeably lowers thermal resistance R_{th2}. The values specified in the data sheets for thermal resistances and the maximum continuous current were determined in a series of tests, in which the motor was end-mounted onto a vertical plastic plate. The modified thermal resistance R_{th2} that occurs in a particular application must be determined using original installation and ambient conditions. Thermal resistance R_{th2} on motors with metal flanges decreases by up to 80% if the motor is coupled to a good heat-conducting (e.g. metallic) retainer.

The heating runs at different rates for the winding and stator due to the different masses. After switching on the current, the winding heats up first (with time constants from several seconds to half a minute). The stator reacts much slower, with time constants ranging from 1 to 30 minutes depending on motor size. A thermal balance is gradually established. The temperature difference of the winding compared to the ambient temperature can be determined with the value of the current I (or in intermittent operation with the effective value of the current $I = I_{RMS}$).

$$\Delta T_W = \frac{(R_{th1} + R_{th2}) \cdot R \cdot I_{mot}^2}{1 - \alpha_{Cu} \cdot (R_{th1} + R_{th2}) \cdot R \cdot I_{mot}^2}$$

Here, electrical resistance R must be applied at the actual ambient temperature.

Influence of temperature
An increased motor temperature affects winding resistance and magnetic characteristic values.

Winding resistance increases linearly according to the thermal resistance coefficient for copper ($\alpha_{Cu} = 0.0039$):

$$R_T = R_{25} \cdot (1 + \alpha_{Cu} (T - 25°C))$$

Example: a winding temperature of 75°C causes the winding resist- ance to increase by nearly 20%.

The magnet becomes weaker at higher temperatures. The reduction is 1 to 10% at 75°C depending on the magnet material.

The most important consequence of increased motor temperature is that the speed curve becomes steeper which reduces the stall torque. The changed stall torque can be calculated in first approximation from the voltage and increased winding resistance:

$$M_{HT} = k_M \cdot I_{AT} = k_M \cdot \frac{U_{mot}}{R_T}$$

Motor selection

The drive requirements must be defined before proceeding to motor selection.
– How fast and at which torques does the load move?
– How long do the individual load phases last?
– What accelerations take place?
– How great are the mass inertias?
Often the drive is indirect, this means that there is a mechanical transformation of the motor output power using belts, gears, screws and the like. The drive parameters, therefore, are to be calculated to the motor shaft. Additional steps for gear selection are listed below.

Furthermore, the power supply requirements need to be checked.
– Which maximum voltage is available at the motor terminals?
– Which limitations apply with regard to current?
The current and voltage of motors supplied with batteries or solar cells are very limited. In the case of control of the unit via a servo amplifier, the amplifier's maximum current is often an important limit.

Selection of motor types
The possible motor types are selected using the required torque. On the one hand, the peak torque, M_{max}, is to be taken into consideration and on the other, the effective torque M_{RMS}. Continuous operation is characterized by a single operating or load point (M_L, n_L). The motor types in question must have a nominal torque (= max. continuous torque) M_N that is greater than load torque M_L.

$$M_N > M_L$$

In work cycles, such as start/stop operation, the motor's nominal torque must be greater than the effective load torque (quadratically averaged). This prevents the motor from overheating.

$$M_N > M_{RMS}$$

The stall torque of the selected motor should usually exceed the emerging load peak torque.

$$M_H > M_{max}$$

Selection of the winding: electric requirement
In selecting the winding, it must be ensured that the voltage applied directly to the motor is sufficient for attaining the required speed in all operating points.

Unregulated operation
In applications with only one operating point, this is often achieved with a fixed voltage *U*. A winding is sought with a speed-torque line that passes through the operating point at the specified voltage. The calculation uses the fact that all motors of a type feature practically the same speed-torque gradient. A target no load speed $n_{0,theor}$ is calculated from operating point (n_L, M_L).

$$n_{0,\,theor} = n_L + \frac{\Delta n}{\Delta M} M_L$$

This target no load speed must be achieved with the existing voltage *U*, which defines the target speed constant.

$$k_{n,\,theor} = \frac{n_{0,\,theor}}{U_{mot}}$$

Those windings whose kn is as close to $k_{n,\,theor}$ as possible, will approximate the operating point the best at the specified voltage. A somewhat larger speed constant results in a somewhat higher speed, a smaller speed constant results in a lower one. The variation of the voltage adjusts the speed to the required value, a principle that servo amplifiers also use.

The motor current I_{mot} is calculated using the torque constant k_M of the selected winding and the load torque M_L.

$$I_{mot} = \frac{M_L}{k_M}$$

Advices for evaluating the requirements:
Often the load points (especially the torque) are not known or are difficult to determine. In such cases you can operate your device with a measuring motor roughly estimated according to size and power. Vary the voltage until the desired operating points and motion sequences have been achieved. Measure the voltage and current flow. Using these specifications and the part number of the measuring motor, our engineers can often specify the suitable motor for your application.

Additional optimization criteria are, for example:
– Mass to be accelerated (type, mass inertia)
– Type of operation (continuous, intermittent, reversing)
– Ambient conditions (temperature, humidity, medium)
– Power supply, battery

When selecting the motor type, other constraints also play a major role:
– What maximum length should the drive unit have, including gear and encoder?
– What diameter?
– What service life is expected from the motor and which commutation system should be used?
– Precious metal commutation for continuous operation at low currents (rule of thumb for longest service life: up to approx. 50% of I_N).
– Graphite commutation for high continuous currents (rule of thumb: 50% to approx. 75% of I_N) and frequent current peaks (start/stop operation, reversing operation).
– Electronic commutation for highest speeds and longest service life.
– How great are the forces on the shaft, do ball bearings have to be used or are less expensive sintered bearings sufficient?

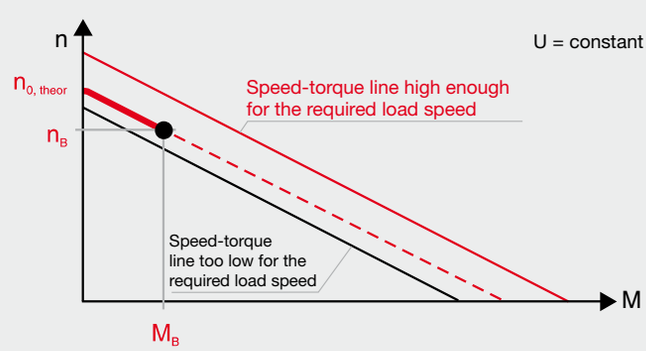

Regulated servo drives
In work cycles, all operating points must lie beneath the curve at a maximum voltage U_{max}. Mathematically, this means that the following must apply for all operating points *(n_L, M_L):*

$$k_n \cdot U_{max} = n_0 > n_L + \frac{\Delta n}{\Delta M} M_L$$

When using servo amplifiers, a voltage drop occurs at the power stage, so that the effective voltage applied to the motor is lower. This must be taken into consideration when determining the maximum supply voltage U_{max}. It is recommended that a regulating reserve of some 20% be included, so that regulation is even ensured with an unfavorable tolerance situation of motor, load, amplifier and supply voltage. Finally, the average current load and peak current are calculated ensuring that the servo amplifier used can deliver these currents. In some cases, a higher resistance winding must be selected, so that the currents are lower. However, the required voltage is then increased.

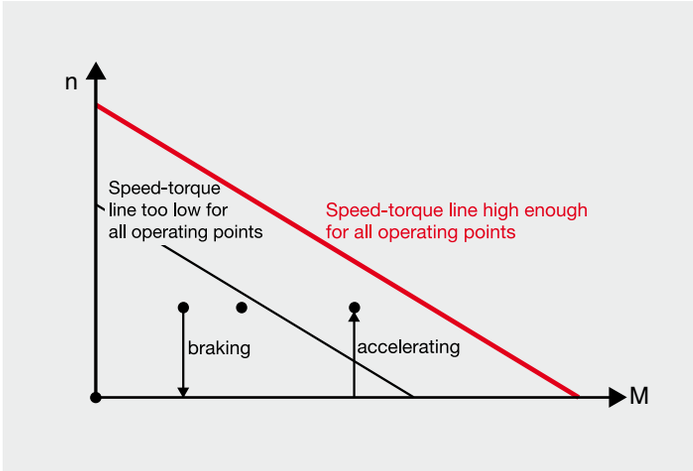

Example for motor/gear selection

A drive should move cyclically according to the following speed diagram.

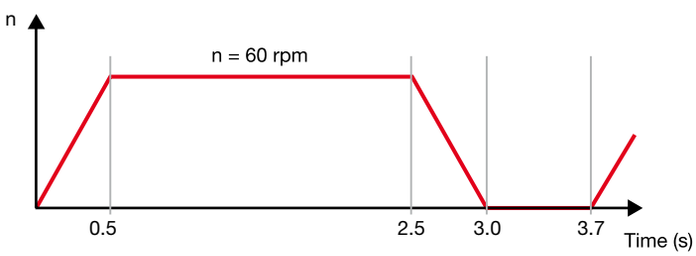

The inertia of the load to be accelerated J_L is 140 000 gcm². The constant coefficient is approximately 300 mNm. The 4-quadrant operation allows controlled and dynamic motor operation and brake operation in two directions of rotation (all 4 quadrants). The power supply unit delivers max. 3 A and 24 V.

Calculation of load data
The torque required for acceleration and braking are calculated as follows (motor and gearhead inertia omitted):

$$M_\alpha = J_L \cdot \frac{\pi}{30} \frac{\Delta n}{\Delta t} = 0.014 \cdot \frac{\pi}{30} \cdot \frac{60}{0.5} = 0.176 \text{ Nm} = 176 \text{ mNm}$$

Together with the friction torque, the following torques result for the different phases of motion.

– Acceleration phase	(duration 0.5 s)	476 mNm
– Constant speed	(duration 2 s)	300 mNm
– Braking (friction brakes with 300 mNm)	(duration 0.5 s)	124 mNm
– Standstill	(duration 0.7 s)	0 mNm

Peak torque occurs during acceleration.
The RMS determined torque of the entire work cycle is

$$M_{RMS} = \sqrt{\frac{t_1 \cdot M^2_1 + t_2 \cdot M^2_2 + t_3 \cdot M^2_3 + t_4 \cdot M^2_4}{t_{tot}}}$$

$$= \sqrt{\frac{0.5 \cdot 476^2 + 2 \cdot 300^2 + 0.5 \cdot 124^2 + 0.7 \cdot 0}{3.7}} \approx 285 \text{ mNm}$$

The maximum speed (60 rpm) occurs at the end of the acceleration phase at maximum torque (463 mNm). Thus, the peak mechanical power is:

$$P_{max} = M_{max} \cdot \frac{\pi}{30} n_{max} = 0.476 \cdot \frac{\pi}{30} \cdot 60 \approx 3 \text{ W}$$

Physical variables		**and their units** SI	Catalog
i	Gear reduction*		
I_{mot}	Motor current	A	A, mA
I_A	Starting current*	A	A, mA
I_0	No load current*	A	mA
I_{RMS}	RMS determined current	A	A, mA
I_N	Nominal current*	A	A, mA
J_R	Moment of inertia of the rotor*	kgm²	gcm²
J_L	Moment of inertia of the load	kgm²	gcm²
k_M	Torque constant*	Nm/A	mNm/A
k_n	Speed constant*		rpm/V
M	(Motor) torque	Nm	mNm
M_L	Load torque	Nm	mNm
M_H	Stall torque*	Nm	mNm
M_{mot}	Motor torque	Nm	mNm
M_R	Moment of friction	Nm	mNm
M_{RMS}	RMS determined torque	Nm	mNm
M_N	Nominal torque	Nm	mNm
$M_{N,G}$	Max. torque of gear*	Nm	Nm
n	Speed		rpm
n_L	Operating speed of the load		rpm
n_{max}	Limit speed of motor*		rpm
$n_{max,G}$	Limit speed of gear*		rpm
n_{mot}	Motor speed		rpm
n_0	No load speed*		rpm
P_{el}	Electrical power	W	W
P_J	Joule power loss	W	W
P_{mech}	Mechanical power	W	W
R	Terminal resistance	Ω	Ω
R_{25}	Resistance at 25°C*	Ω	Ω
R_T	Resistance at temperature T	Ω	Ω
R_{th1}	Heat resistance winding housing*		K/W
R_{th2}	Heat resistance housing/air*		K/W
t	Time	s	s
T	Temperature	K	°C
T_{max}	Max. winding temperature*	K	°C
T_U	Ambient temperature	K	°C
T_W	Winding temperature	K	°C
U_{mot}	Motor voltage	V	V
U_{ind}	Induced voltage (EMF)	V	V
U_{max}	Max. supplied voltage	V	V
U_N	Nominal voltage*	V	V
α_{Cu}	Resistance coefficient of Cu	= 0.0039	
α_{max}	Maximum angle acceleration	rad/s²	
$\Delta n/\Delta M$	Curve gradient*	rpm/mNm	
ΔT_W	Temperature difference winding/ambient	K	K
Δt	Run up time	s	ms
η	(Motor) efficiency		%
η_G	(Gear) efficiency*		%
η_{max}	Maximum efficiency*		%
τ_m	Mechanical time constant*	s	ms
τ_S	Therm. time constant of the motor*	s	s
τ_W	Therm. time constant of the winding*	s	s

(*Specified in the motor or gear data)

Gear selection
A gear is required with a maximum continuous torque of at least 0.28 Nm and an intermittent torque of at least 0.47 Nm. This requirement is fulfilled, for example, by a planetary gear with 22 mm diameter (metal version GB 22 A).
The recommended input speed of 6000 rpm allows a maximum reduction of:

$$i_{max} = \frac{n_{max,\,G}}{n_B} = \frac{6000}{60} = 100:1$$

We select the three-stage gear with the next smallst reduction of 84 : 1 (stock program). Efficiency is max. 59%.

Motor type selection
Speed and torque are calculated to the motor shaft

$$n_{mot} = i \cdot n_L = 84 \cdot 60 = 5040 \text{ rpm}$$

$$M_{mot,\,RMS} = \frac{M_{RMS}}{i \cdot \eta} = \frac{285}{84 \cdot 0.59} \approx 5.8 \text{ mNm}$$

$$M_{mot,\,max} = \frac{M_{max}}{i \cdot \eta} = \frac{476}{84 \cdot 0.59} \approx 9.6 \text{ mNm}$$

The possible motors, which match the selected gears in accordance with the maxon modular system, are summarized *in the table opposite.* The table contains only DC motors with graphite commutation, which are better suited for start-stop operation, as well as brushless EC motors.

Selection falls on an A-max 22, 6 W, which demonstrates a sufficiently high continuous torque. The motor should have a torque reserve so that it can even function with a somewhat unfavorable gear efficiency. The additional torque requirement during acceleration can easily be delivered by the motor. The temporary peak torque is not even twice as high as the continuous torque of the motor.

Selection of the winding
The motor type A-max 22, 6 W has an average speed-torque gradient of some 450 rpm/mNm. However, it should be noted that the two lowest resistance windings have a somewhat steeper gradient. The desired no load speed is calculated as follows:

$$n_{0,\,theor} = n_{mot} + \frac{\Delta n}{\Delta M} \cdot M_{max} = 5040 + 450 \cdot 9.6 = 9360 \text{ rpm}$$

The extreme operating point should of course be used in the calculation (max. speed and max. torque), since the speed-torque line of the winding must run above all operating points in the speed / torque diagram.
This target no load speed must be achieved with the maximum voltage U = 24 V supplied by the control (ESCON 36/2), which defines the minimum target speed constant $k_{n,\,theor}$ of the motor.

$$k_{n,\,theor} = \frac{n_{0,\,theor}}{U_{mot}} = \frac{9360}{24} = 390 \ \frac{\text{rpm}}{V}$$

According to the calculations, the selection of the motor is 110163, which with its speed constant of 558 rpm/V has a speed control reserve of over 20%. This means that unfavorable tolerances are not a problem. The higher speed constant of the winding compared to the calculated value means that the motor runs faster at 24 V than required, which can be compensated with the controller. This motor also has a second shaft end for mounting an encoder.
The torque constant of this winding is 17.1 mNm/A. Therefore the maximum torque corresponds to a peak current of:

$$I_{max} = \frac{M_{max}}{k_M} + I_0 = \frac{9.6}{17.1} + 0.029 = 0.6\,A$$

This current is smaller than the maximum current (4 A) of the controller and the power supply unit (3 A).

Thus, a gear motor has been found that fulfils the requirements (torque and speed) and can be operated by the controller provided.

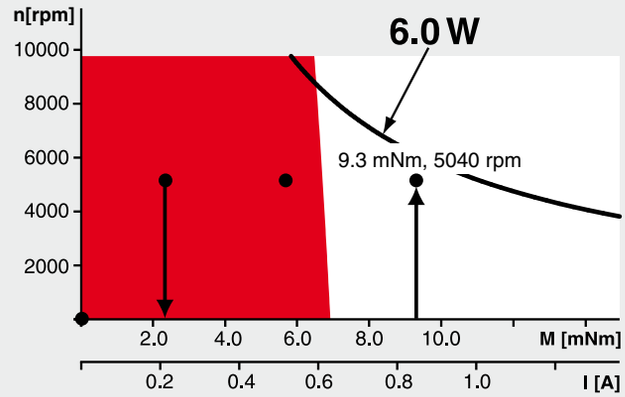

Motor	M_N	Suitability
A-max 22, 6 W	≈ 6.9 mNm	good
A-max 19, 2.5 W	≈ 3.8 mNm	too weak
RE-max 21, 6 W	≈ 6.8 mNm	good
EC 16, 30 W	≈ 8.5 mNm	good
EC 16, 60 W	≈ 17 mNm	too strong
EC 20 flat, 3 W	≈ 3-4 mNm	too weak
EC 20 flat, 5 W	≈ 7.5 mNm	good
EC 20 flat, 5 W, iE.	≈ 7.5 mNm	good, possible alternative with integrated speed controller, no ESCON control necessary

maxon Conversion Tables

General Information

Quantities and their basic units in the International System of Measurements (SI)

Quantity	Basic-unit	Sign
Length	Meter	m
Mass	Kilogram	kg
Time	Second	s
Electrical current	Ampere	A
Thermodynamic Temperature	Kelvin	K

Conversion Example
A known unit
B unit sought

known:	multiply by	sought:
oz-in	7.06	mNm

Factors used for ...

... conversions:
1 oz = $2.834952313 \cdot 10^{-2}$ kg
1 in = $2.54 \cdot 10^{-2}$ m

... gravitational acceleration:
g = 9.80665 m s^{-2}
= 386.08858 in s^{-2}

... derived units:
1 yd = 3 ft = 36 in
1 lb = 16 oz = 7000 gr (grains)
1 kp = 1 kg · 9.80665 ms^{-2}
1 N = 1 $kgms^{-2}$
1 W = 1 Nms^{-1} = 1 kgm^2s^{-3}
1 J = 1 Nm = 1 Ws

Decimal multiples and fractions of units

Prefix	Abbre-viation	Multiply	Prefix	Abbre-viation	Multiply
Deka . .	da	10^1	Dezi . .	d	10^{-1}
Hekto . .	h	10^2	Zenti . .	c	10^{-2}
Kilo . .	k	10^3	Milli . .	m	10^{-3}
Mega . .	M	10^6	Mikro . .	µ	10^{-6}
Giga . .	G	10^9	Nano . .	n	10^{-9}
Tera . .	T	10^{12}	Piko . .	p	10^{-12}

Arc definition

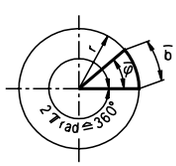

$\varphi = \frac{b}{r}$

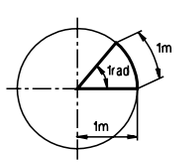

$1\text{rad} = \frac{1\text{m}}{1\text{m}} \triangleq 57.2958°$

Units used in this brochure

Power

P [W]

B \ A	oz-in-s^{-1}	oz-in-min^{-1}	in-lbf-s^{-1}	ft-lbf-s^{-1}	W = N · ms^{-1}	mW	kpm s^{-1}	mNm min^{-1}
W = N · ms^{-1}	$7.06 \cdot 10^{-3}$	$1.17 \cdot 10^{-4}$	0.113	1.356	1	$1 \cdot 10^{-3}$	9.807	$^{2\pi}/_{60000}$
mW	7.06	0.117	112.9	$1.356 \cdot 10^3$	$1 \cdot 10^3$	1	$9.807 \cdot 10^3$	$^{2\pi}/_{60}$
oz-in-s^{-1}	1	1/60	16	192	141.6	0.142	$1.39 \cdot 10^3$	$2.36 \cdot 10^{-3}$
ft-lbf-s^{-1}	$^1/_{192}$	$^1/_{11520}$	$^1/_{12}$	1	0.737	$0.737 \cdot 10^{-3}$	7.233	$1.23 \cdot 10^{-5}$
kpm s^{-1}	$7.20 \cdot 10^{-4}$	$1.2 \cdot 10^{-5}$	$1.15 \cdot 10^{-2}$	0.138	0.102	$0.102 \cdot 10^{-3}$	1	$1.70 \cdot 10^{-6}$

Torque

M [Nm]

B \ A	oz-in	ft-lbf	Nm = Ws	Ncm	mNm	kpm	pcm
Nm	$7.06 \cdot 10^{-3}$	1.356	1	$1 \cdot 10^{-2}$	$1 \cdot 10^{-3}$	9.807	$9.807 \cdot 10^{-5}$
mNm	7.06	$1.356 \cdot 10^3$	$1 \cdot 10^3$	10	1	$9.807 \cdot 10^3$	$9.807 \cdot 10^{-2}$
kpm	$7.20 \cdot 10^{-4}$	0.138	0.102	$0.102 \cdot 10^{-2}$	$0.102 \cdot 10^{-3}$	1	$1 \cdot 10^{-5}$
oz-in	1	192	141.6	1.416	0.142	$1.39 \cdot 10^3$	$1.39 \cdot 10^{-2}$
ft-lbf	$^1/_{192}$	1	0.737	$0.737 \cdot 10^{-2}$	$0.737 \cdot 10^{-3}$	7.233	$7.233 \cdot 10^{-5}$

Moment of Inertia

J [kg m^2]

B \ A	oz-in^2	oz-in-s^2	lb-in^2	lb-in-s^2	Nms^2=kgm^2	mNm s^2	gcm^2	kpm s^2
g cm^2	182.9	$7.06 \cdot 10^4$	$2.93 \cdot 10^3$	$1.13 \cdot 10^6$	$1 \cdot 10^7$	$1 \cdot 10^4$	1	$9.807 \cdot 10^7$
kgm^2=Nms^2	$1.83 \cdot 10^{-5}$	$7.06 \cdot 10^{-3}$	$2.93 \cdot 10^{-4}$	0.113	1	$1 \cdot 10^{-3}$	$1 \cdot 10^{-7}$	9.807
oz-in^2	1	386.08	16	$6.18 \cdot 10^3$	$5.46 \cdot 10^4$	54.6	$5.46 \cdot 10^{-3}$	$5.35 \cdot 10^5$
lb-in^2	$^1/_{16}$	24.130	1	386.08	$3.41 \cdot 10^3$	3.41	$3.41 \cdot 10^{-4}$	$3.35 \cdot 10^4$

Mass

m [kg]

B \ A	oz	lb	gr (grain)	kg	g
kg	$28.35 \cdot 10^{-3}$	0.454	$64.79 \cdot 10^{-6}$	1	$1 \cdot 10^{-3}$
g	28.35	$0.454 \cdot 10^3$	$64.79 \cdot 10^{-3}$	$1 \cdot 10^3$	1
oz	1	16	$2.28 \cdot 10^{-3}$	35.27	$35.27 \cdot 10^3$
lb	$^1/_{16}$	1	$^1/_{7000}$	2.205	$2.205 \cdot 10^3$
gr (grain)	437.5	7000	1	$15.43 \cdot 10^3$	$15.43 \cdot 10^6$

Force

F [N]

B \ A	oz	lbf	N	kp	p
N	0.278	4.448	1	9.807	$9.807 \cdot 10^{-3}$
kp	0.028	0.454	0.102	1	$1 \cdot 10^{-3}$
oz	1	16	3.600	35.27	$35.27 \cdot 10^{-3}$
lbf	$^1/_{16}$	1	0.225	2.205	$2.205 \cdot 10^{-3}$
pdl	2.011	32.17	7.233	70.93	$70.93 \cdot 10^{-3}$

Length

l [m]

B \ A	in	ft	yd	Mil	m	cm	mm	µ
m	$25.4 \cdot 10^{-3}$	0.305	0.914	$25.4 \cdot 10^{-6}$	1	0.01	$1 \cdot 10^{-3}$	$1 \cdot 10^{-6}$
cm	2.54	30.5	91.4	$25.4 \cdot 10^{-4}$	$1 \cdot 10^2$	1	0.1	$1 \cdot 10^{-4}$
mm	25.4	305	914	$25.4 \cdot 10^{-3}$	$1 \cdot 10^3$	10	1	$1 \cdot 10^{-3}$
in	1	12	36	$1 \cdot 10^{-3}$	39.37	0.394	$3.94 \cdot 10^{-2}$	$3.94 \cdot 10^{-5}$
ft	$^1/_{12}$	1	3	$^1/_{12} \cdot 10^{-3}$	3.281	$3.281 \cdot 10^{-2}$	$3.281 \cdot 10^{-3}$	$3.281 \cdot 10^{-6}$

Angular Velocity

ω [s^{-1}]

B \ A	s^{-1} = Hz	rpm	rad s^{-1}
rad s^{-1}	2π	$^\pi/_{30}$	1
rpm	$^1/_{60}$	1	$^{30}/_\pi$

Angular Acceleration

α [s^{-2}]

B \ A	min^{-2}	s^{-2}	rad s^{-2}	min^{-1} s^{-1}
s^{-2}	$^1/_{3600}$	1	$^1/_{2\pi}$	$^1/_{60}$
rad s^{-2}	$^\pi/_{1800}$	2π	1	$^\pi/_{30}$

Linear Velocity

v [m s^{-1}]

B \ A	in-s^{-1}	in-min^{-1}	ft-s^{-1}	ft-min^{-1}	m s^{-1}	cm s^{-1}	mm s^{-1}	m min^{-1}
m s^{-1}	$2.54 \cdot 10^{-2}$	$4.23 \cdot 10^{-4}$	0.305	$5.08 \cdot 10^{-3}$	1	$1 \cdot 10^{-2}$	$1 \cdot 10^{-3}$	$^1/_{60}$
in-s^{-1}	1	60	12	720	39.37	$39.37 \cdot 10^{-2}$	$39.37 \cdot 10^{-3}$	0.656
ft-s^{-1}	$^1/_{12}$	5	1	60	3.281	$3.281 \cdot 10^{-2}$	$3.281 \cdot 10^{-3}$	$5.46 \cdot 10^{-2}$

Temperature

T [K]

B \ A	° Fahrenheit	° Celsius = Centigrade	Kelvin
Kelvin	(°F -305.15) / 1.8	+ 273.15	1
° Celsius	(°F -32) / 1.8	1	-273.15
° Fahrenheit	1	1.8°C + 32	1.8 K + 305.15

maxon X drives

Configure online.

- DYNAMIC
- HIGH PERFORMANCE
- LOW NOISE
- FAST PROCESSING

dcx.maxonmotor.com

maxon X drives

Configure, combine and order DC motors (maxon DCX), gearheads (maxon GPX) and encoders (maxon ENX) that match your individual needs. Fast, easy and online: dcx.maxonmotor.com

Technology and Processing	52–56
maxon DCX motor	57–64
maxon GPX gear	65–71
maxon ENX encoder	73–75
Explanation	76

WHAT CAN BE CONFIGURED ONLINE?

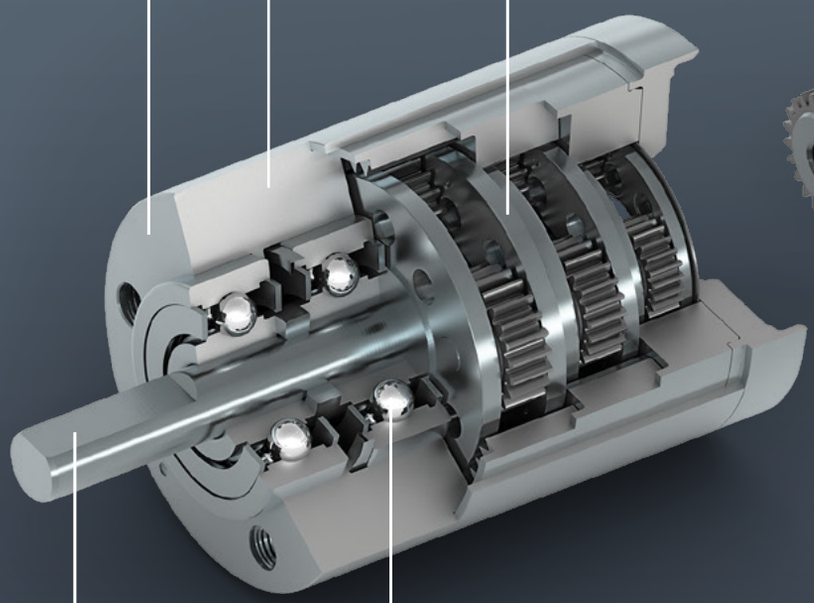

WINDING

Low nominal voltage
Low resistance
High current
High speed constant:
speed per volt

High nominal voltage
High resistance
Low current
High torque constant:
torque per ampere

COMMUTATION

Graphite brushes
High current and current peaks
Start/stop and reverse operation
Large motors (from approx. 5 W)
EMI filter

Precious metal brushes
Low current and voltage
Continuous operation
Cost-effective
EMI filter, CLL spark suppression

ENCODER

Counts per turn
Cable outlet angle with
strain relief
Cable length

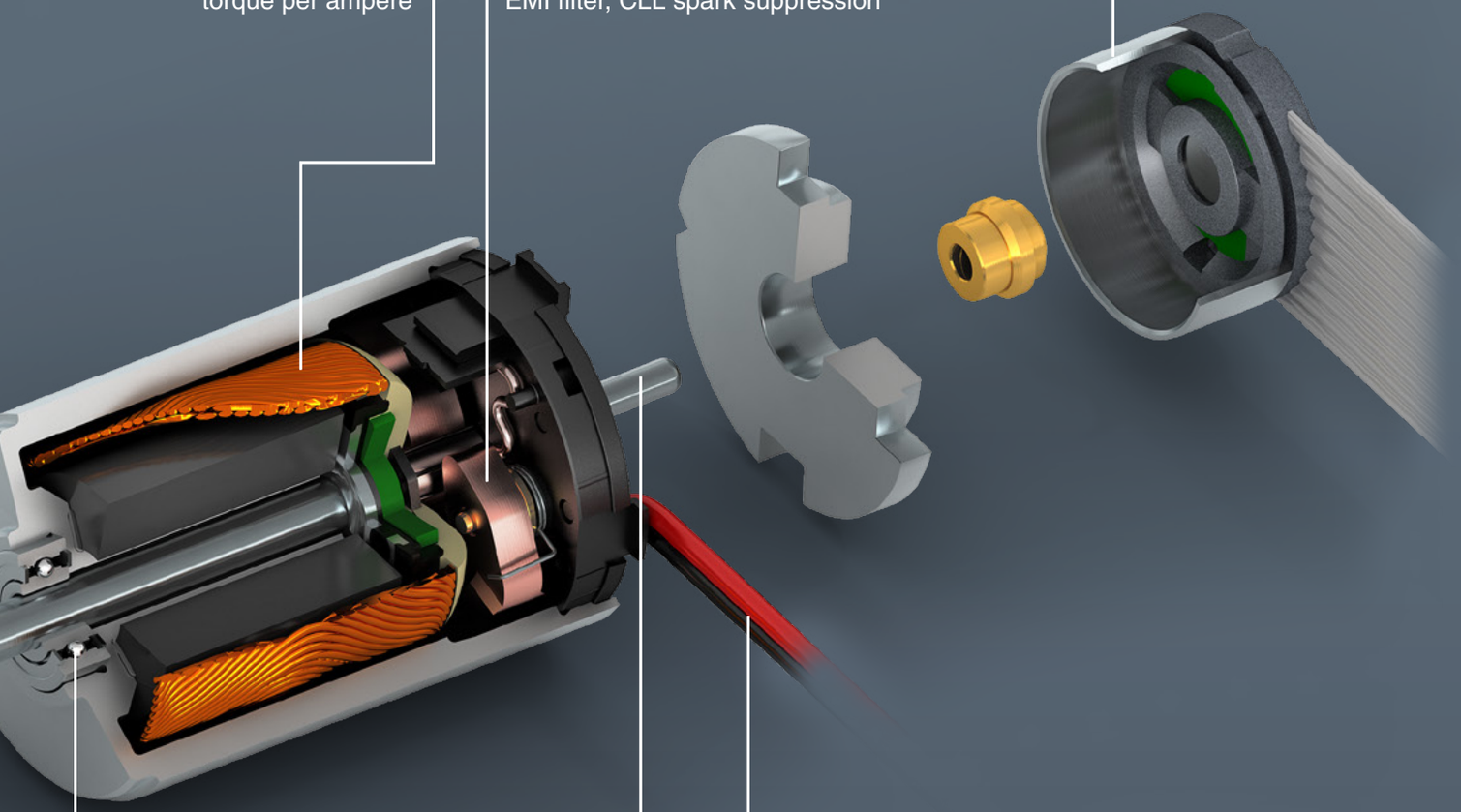

SHAFT

Length

CONNECTIONS

Terminals
Cable
Connector

BEARING

Ball bearing
All operating modes
Higher radial and axial load

Sleeve bearing
For continuous operation at high speeds
Cost-effective

dcx.maxonmotor.com

COMBINE ONLINE

The DCX motor can be combined with a predefined selection of additional X-drive components such as gearheads and encoders.

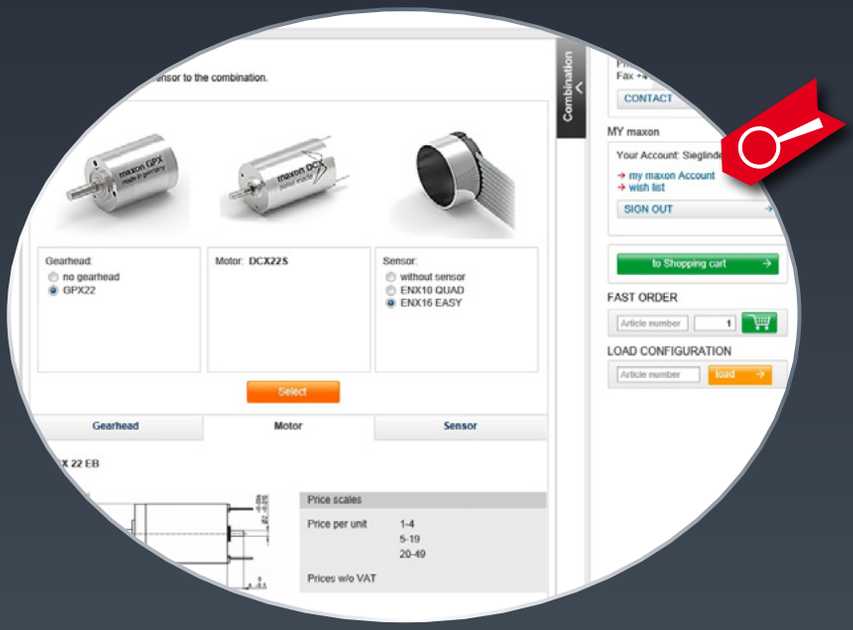

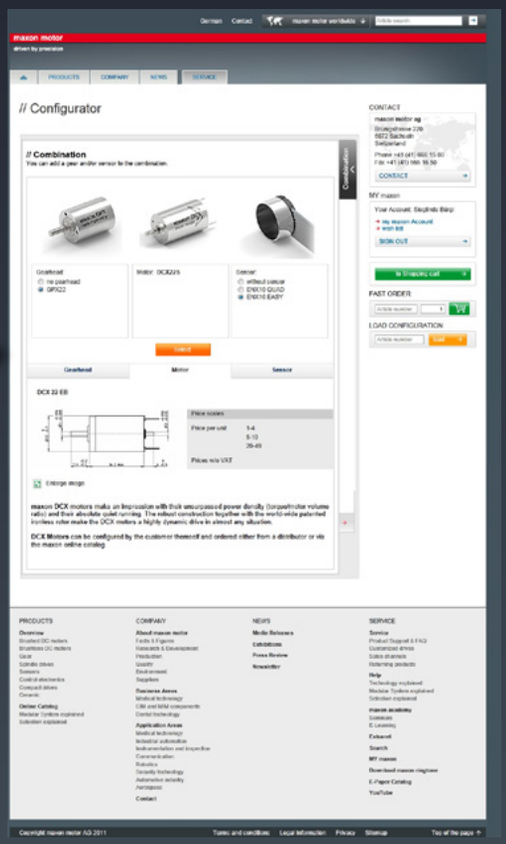

CONFIGURE ONLINE

The selected basic product can be configured using the available options. The result is your own unique version with corresponding article number.

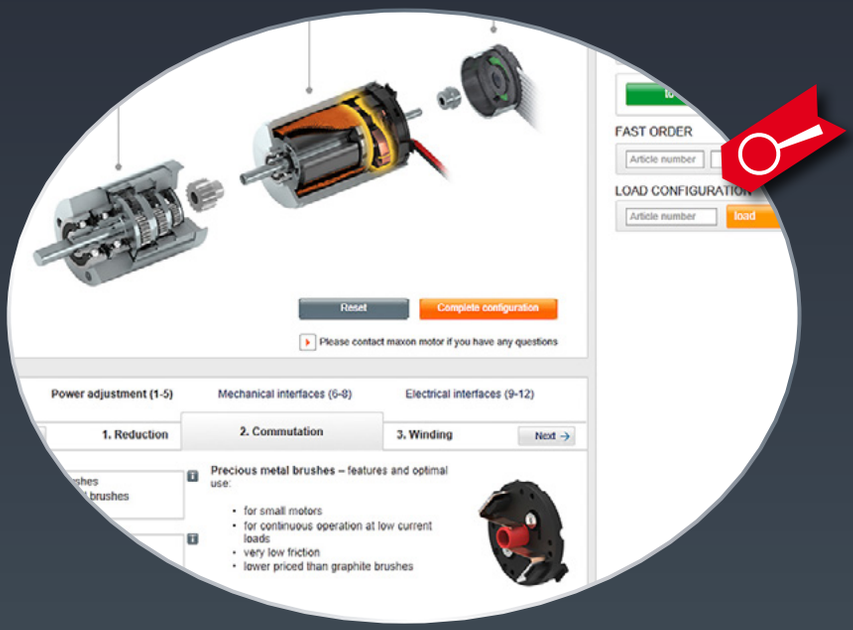

ORDER ONLINE

After all configurations have been completed, full specifications and documentation for the configured products are generated. 2D and 3D dimensional drawings can be downloaded. A complete, ready-to-print specification document describes your drive. Up to 49 units can be ordered directly online.

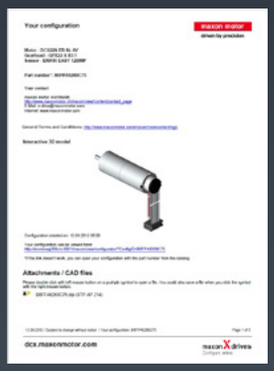

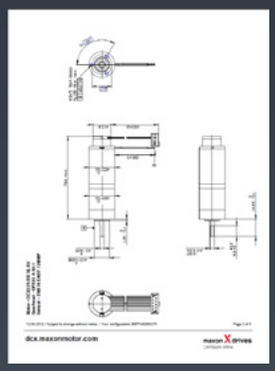

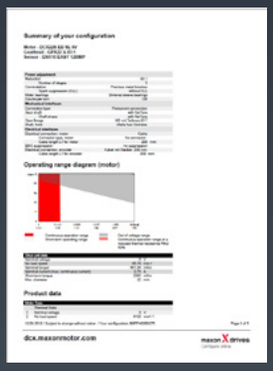

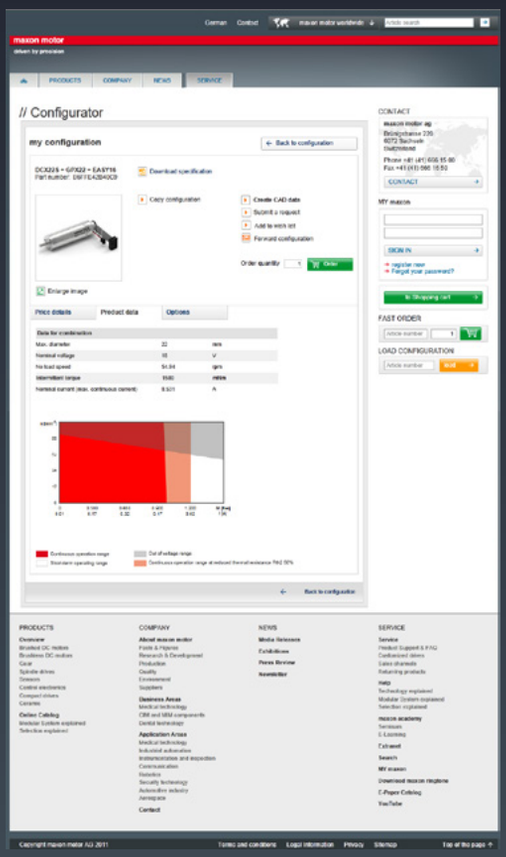

FAST PROCESSING – WORLDWIDE NETWORK

Configure and order your drive online. dcx.maxonmotor.com

HEADQUARTERS

maxon motor ag
Brünigstrasse 220
P.O. Box 263
6072 Sachseln
Switzerland

+41 (41) 666 15 00
contact.maxonmotor.com

maxon motor

driven by precision

maxon DCX SELECTION

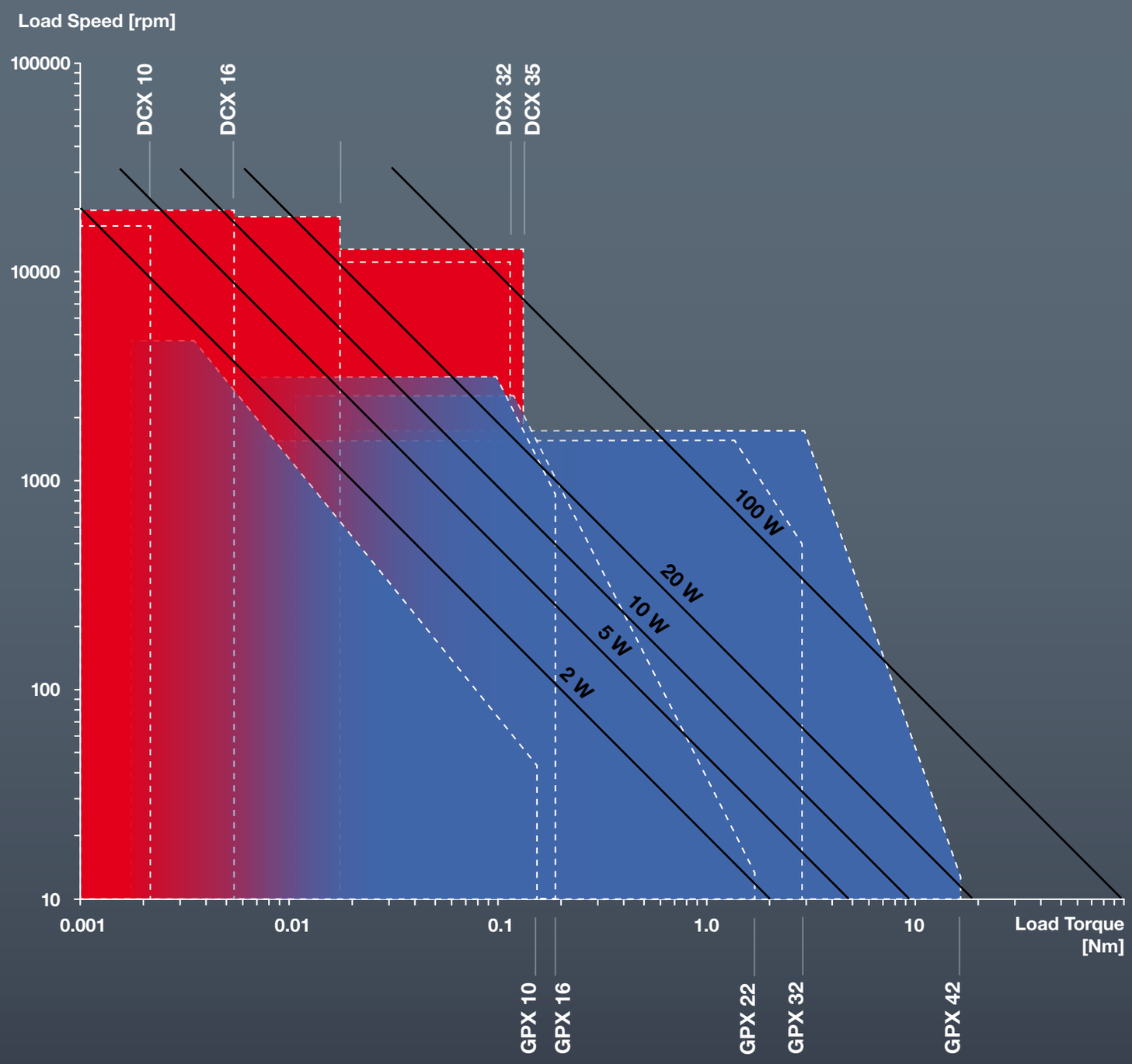

maxon DCX

maxon DCX MOTOR

maxon DCX motors make an impression with their unsurpassed power density (torque / motor volume ratio) and their absolute quiet running. The robust construction together with the worldwide patented ironless rotor make the DCX motors a highly dynamic drive in almost any situation.

DCX maxon motors can be configured and ordered online. dcx.maxonmotor.com

maxon motor

driven by precision

Configure and order your drive online.
dcx.maxonmotor.com

NEW

DCX 10 S brushed DC motor Ø10 mm

Configurable

Key Data		Precious Metal Brushes
Typical Speed/torque gradient	rpm/mNm	9617
Max. nominal torque	mNm	0.94
Max. permissible speed	rpm	14300
Max. continuous output power/assigned power rating	W	1.4/1
Max. efficiency	%	57
Ambient temperature	°C	-30 … 85
Mech. time constant	ms	7.45
Therm. time constant winding	s	4.7
Rotor inertia	gcm^2	0.07
Max. axial loading (dynamic)	N	Ball bearings: 0.5 / Sleeve bearings: 0.1
Max. radial loading, 5 mm from flange	N	Ball bearings: 1.5 / Sleeve bearings: 0.8
Typical noise level	dBA	35
Weight	g	6.3

Operating Range — **Precious Metal Brushes**

- Continuous operation
- Continuous operation with reduced thermal resistance Rth_2 50%
- Intermittent operation

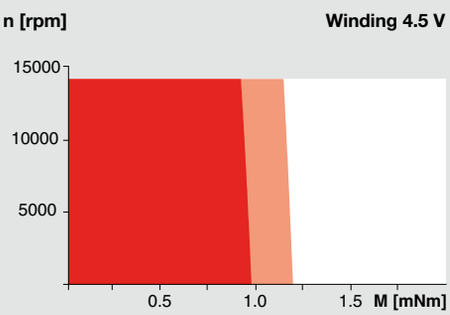

Specifications		Precious Metal Brushes					
Nominal voltage	V	1.5	3	4.5	6	9	12
No load speed	rpm	12700	13100	12700	12700	12600	12600
No load current	mA	90.6	47.3	30.2	22.6	15.1	11.3
Nominal current	A	0.924	0.489	0.316	0.233	0.152	0.114
Torque constant	mNm/A	1.05	2.05	3.16	4.22	6.33	8.44
Speed constant	rpm/V	9050	4660	3020	2260	1510	1130
Terminal resistance	Ω	1.11	4.07	9.75	17.9	41.8	75.0
Terminal inductance	mH	0.019	0.073	0.173	0.307	0.692	1.23

Configuration	dcx.maxonmotor.com
Bearing	Sleeve bearings/ball bearings preloaded
Commutation	Precious metal brushes with or without CLL
Flange front/back	Standard flange/Flange with thread holes/no flange
Shaft front/back	Length
Electric connection	Terminals or cable/cable length/connector type

maxon Modular System	Page
maxon gear	
GPX 10	66
maxon sensor	
ENX 10 EASY	74
ENX 10 QUAD	74
maxon motor control	
ESCON 36/2 DC	342
EPOS2 24/2 (DC/EC)	350
EPOS2 Module 36/2	350
EPOS2 P 24/5	354

Dimensions Standard Configuration — **M 1.5:1**

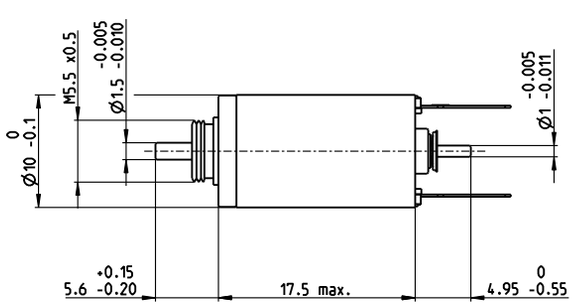

Shortest configuration possible: 16.9 mm

Configure and order your drive online.
dcx.maxonmotor.com

DCX 10 L brushed DC motor Ø10 mm

Configurable

Key Data		Precious Metal Brushes
Typical Speed/torque gradient	rpm/mNm	2555
Max. nominal torque	mNm	2.21
Max. permissible speed	rpm	14300
Max. continuous output power/assigned power rating	W	3/1.5
Max. efficiency	%	76
Ambient temperature	°C	-30 … +85
Mech. time constant	ms	3.63
Therm. time constant winding	s	3.9
Rotor inertia	gcm²	0.14
Max. axial loading (dynamic)	N	Ball bearings: 0.5/Sleeve bearings: 0.1
Max. radial loading, 5 mm from flange	N	Ball bearings: 1.5/Sleeve bearings: 0.8
Typical noise level	dBA	37
Weight	g	11

Operating Range — **Precious Metal Brushes**

- Continuous operation
- Continuous operation with reduced thermal resistance Rth_2 50%
- Intermittent operation

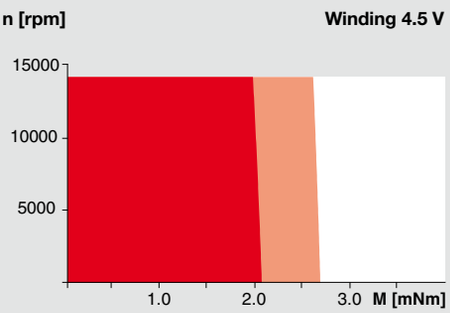

Specifications		Precious Metal Brushes					
Nominal voltage	V	1.5	3	4.5	6	9	12
No load speed	rpm	11500	12100	11900	12100	11900	11200
No load current	mA	75.0	40.4	26.3	20.2	13.1	9.04
Nominal current	A	0.924	0.916	0.646	0.436	0.304	0.211
Torque constant	mNm/A	1.22	2.32	3.54	4.63	7.07	10.0
Speed constant	rpm/V	7830	4120	2700	2060	1350	955
Terminal resistance	Ω	0.385	1.47	2.93	6.43	13.2	27.4
Terminal inductance	mH	0.006	0.021	0.050	0.086	0.199	0.399

Configuration	dcx.maxonmotor.com
Bearing	Sleeve bearings/ball bearings preloaded
Commutation	Precious metal brushes with or without CLL
Flange front/back	Standard flange/Flange with thread holes/no flange
Shaft front/back	Length
Electric connection	Terminals or cable/cable length/connector type

maxon Modular System	Page
maxon gear	
GPX 10	66
maxon sensor	
ENX 10 EASY	74
ENX 10 QUAD	74
maxon motor control	
ESCON 36/2 DC	342
EPOS2 24/2 (DC/EC)	350
EPOS2 Module 36/2	350
EPOS2 P 24/5	354

Dimensions Standard Configuration — **M 1.5:1**

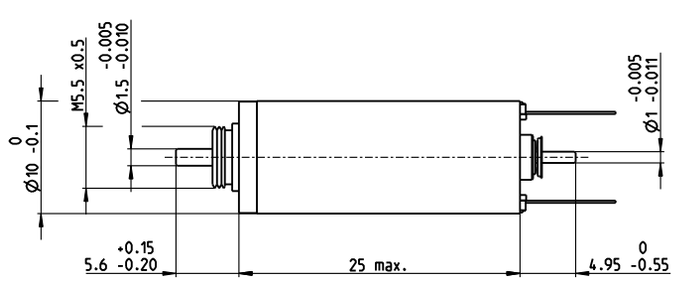

Shortest configuration possible: 24.4 mm

Configure and order your drive online.
dcx.maxonmotor.com

NEW

DCX 16 S brushed DC motor Ø16 mm

Configurable

Key Data		Precious Metal Brushes	Graphite Brushes
Typical Speed/torque gradient	rpm/mNm	584	587
Max. nominal torque	mNm	5.3	5.72
Max. permissible speed	rpm	8680	17000
Max. continuous output power/assigned power rating	W	4.5/2.5	9.5/4.5
Max. efficiency	%	77	80
Ambient temperature	°C	-30 … 85	-40 … 100
Mech. time constant	ms	6.11	6.13
Therm. time constant winding	s	9.6	9.6
Rotor inertia	gcm^2	1.00	1.00
Max. axial loading (dynamic)	N	Ball bearings: 0.8/Sinterlager: 0.1	Ball bearings: 0.8/Sleeve bearings: 0.1
Max. radial loading, 5 mm from flange	N	Ball bearings: 10/Sinterlager: 2.5	Ball bearings: 10/Sleeve bearings: 2.5
Typical noise level	dBA	40	38
Weight	g	23	23

Operating Range

- Continuous operation
- Continuous operation with reduced thermal resistance Rth_2 50%
- Intermittent operation

Precious Metal Brushes

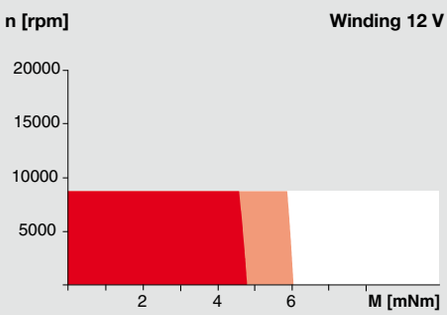

Graphite Brushes

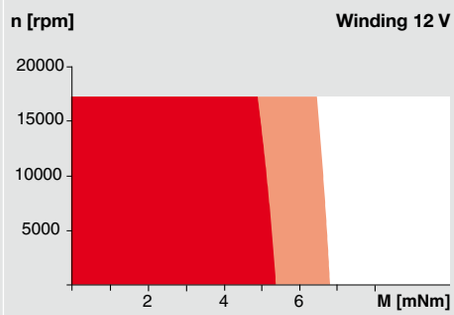

Specifications		Precious Metal Brushes						Graphite Brushes					
Nominal voltage	V	3	4.5	6	9	12	24	6	9	12	18	24	48
No load speed	rpm	6320	6320	6610	6320	6260	6250	12700	12700	13300	12700	12700	12600
No load current	mA	44.6	29.7	23.4	14.9	11.00	5.51	64	42.6	33.9	21.3	16.0	7.9
Nominal current	A	1.20	0.784	0.65	0.389	0.299	0.144	1.30	0.851	0.705	0.423	0.327	0.157
Torque constant	mNm/A	4.45	6.67	8.53	13.3	18	36	4.45	6.67	8.53	13.3	17.8	36.0
Speed constant	rpm/V	2150	1430	1120	715	531	265	2150	1430	1120	715	536	265
Terminal resistance	Ω	1.20	2.80	4.06	11.4	19.2	83.1	1.22	2.82	4.08	11.4	19.1	83.2
Terminal inductance	mH	0.036	0.080	0.131	0.320	0.581	2.32	0.036	0.080	0.131	0.320	0.569	2.32

Configuration	dcx.maxonmotor.com
Bearing	Ball bearings preloaded/sleeve bearings
Commutation	Precious metal brushes with CLL/graphite brushes
Flange front/back	Standard flange/configurable flange/no flange
Shaft front/back	Length/diameter/flat face
Electric connection	Terminals or cable/alignment of connection/cable length/connector type

maxon Modular System	Page
maxon gear	
GPX 16	67
maxon sensor	
ENX 10 QUAD	74
ENX 10 EASY	74
ENX 16 EASY	75
maxon motor control	
ESCON 36/2 DC	342
EPOS2 24/2 (DC/EC)	350
EPOS2 Module 36/2	350
EPOS2 P 24/5	354
EPOS3 70/10 EtherCAT	357
MAXPOS 50/5	360

Dimensions Standard Configuration M 1:1

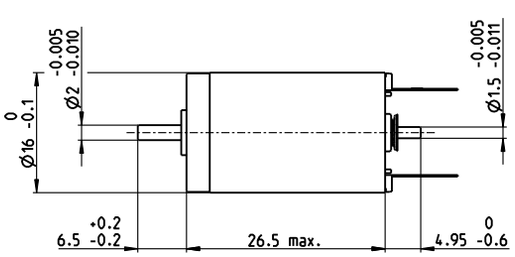

Shortest configuration possible: 24.9 mm

Configure and order your drive online.
dcx.maxonmotor.com

DCX 22 S brushed DC motor Ø22 mm

Configurable

Key Data		Precious Metal Brushes	Graphite Brushes
Typical Speed/torque gradient	rpm/mNm	115	112
Max. nominal torque	mNm	14.7	15.4
Max. permissible speed	rpm	7160	18000
Max. continuous output power/assigned power rating	W	10/5.5	24/14
Max. efficiency	%	85	86
Ambient temperature	°C	-30 … +85	-40 … +100
Mech. time constant	ms	6.13	6.09
Therm. time constant winding	s	20.0	20.0
Rotor inertia	gcm²	5.1	5.2
Max. axial loading (dynamic)	N	Ball bearings: 2.5/Sleeve bearings: 0.1	Ball bearings: 2.5/Sleeve bearings: 0.1
Max. radial loading, 5 mm from flange	N	Ball bearings: 16/Sleeve bearings: 3	Ball bearings: 16/Sleeve bearings: 3
Typical noise level	dBA	48	41
Weight	g	66	66

Operating Range

- Continuous operation
- Continuous operation with reduced thermal resistance Rth_2 50%
- Intermittent operation

Precious Metal Brushes

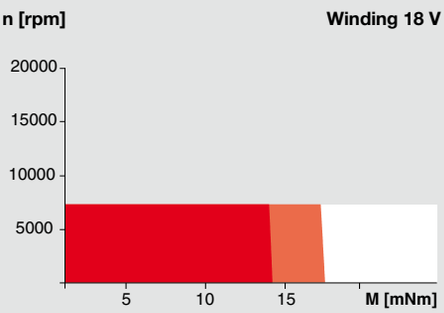

Graphite Brushes

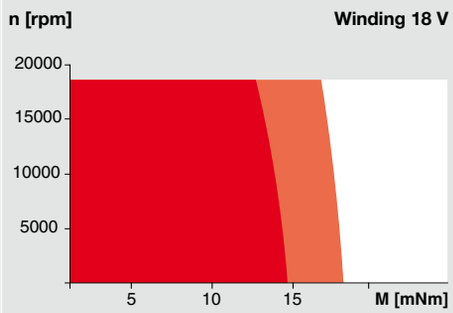

Specifications		Precious Metal Brushes						Graphite Brushes					
Nominal voltage	V	6	12	18	24	36	48	6	12	18	24	36	48
No load speed	rpm	6200	6200	6110	6340	6550	5890	11400	12400	12400	12400	12200	12700
No load current	mA	39.2	19.6	12.8	10.1	7.09	4.55	126	71.8	47.8	35.9	23.4	18.5
Nominal current	A	1.20	0.817	0.531	0.381	0.272	0.180	3.00	1.67	1.13	0.871	0.552	0.398
Torque constant	mNm/A	9.18	18.4	28.0	35.9	52.2	77.2	5.01	9.18	13.8	18.4	28.0	35.9
Speed constant	rpm/V	1040	520	342	266	183	124	1910	1040	693	520	342	266
Terminal resistance	Ω	1.02	3.69	8.75	17.0	33.3	76.2	0.285	1.01	2.19	3.67	8.94	17.2
Terminal inductance	mH	0.058	0.231	0.535	0.881	1.86	4.08	0.017	0.058	0.130	0.231	0.535	0.881

Configuration	dcx.maxonmotor.com
Bearing	Ball bearings preloaded/sleeve bearings
Commutation	Precious metal brushes with or without CLL/graphite brushes/EMI filter
Flange front/back	Standard flange/configurable flange/no flange
Shaft front/back	Length/diameter/flat face
Electric connection	Terminals or cable/alignment of connection/cable length/connector type

maxon Modular System	Page
maxon gear	
GPX 22	68–69
maxon sensor	
ENX 10 QUAD	74
ENX 16 EASY	75
ENC SCH16F	322
ENC 30 HEDL 5540	330
maxon motor control	
ESCON 36/2 DC	342
ESCON 50/5, Module 50/5	343
EPOS2 24/2 (DC/EC)	350
EPOS2 Module 36/2	350
EPOS2 24/5	351
EPOS2 50/5	351
EPOS2 P 24/5	354
EPOS3 70/10 EtherCAT	357
MAXPOS 50/5	360

Dimensions Standard Configuration **M 1:1**

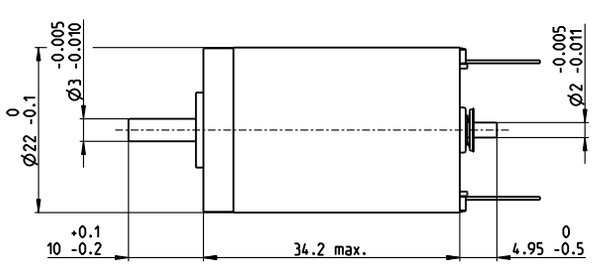

Shortest configuration possible: 31.7 mm

Configure and order your drive online.
dcx.maxonmotor.com

NEW

DCX 22 L brushed DC motor Ø22 mm

Configurable

Key Data		Precious Metal Brushes
Typical Speed/torque gradient	rpm/mNm	34
Max. nominal torque	mNm	29.8
Max. permissible speed	rpm	7160
Max. continuous output power/assigned power rating	W	20/11
Max. efficiency	%	90
Ambient temperature	°C	-30 … 85
Mech. time constant	ms	3.17
Therm. time constant winding	s	22.0
Rotor inertia	gcm^2	9.01
Max. axial loading (dynamic)	N	Ball bearings: 2.5/Sinterlager: 0.1
Max. radial loading, 5 mm from flange	N	Ball bearings: 16/Sinterlager: 3
Typical noise level	dBA	52
Weight	g	90

Operating Range — **Precious Metal Brushes**

- Continuous operation
- Continuous operation with reduced thermal resistance Rth_2 50%
- Intermittent operation

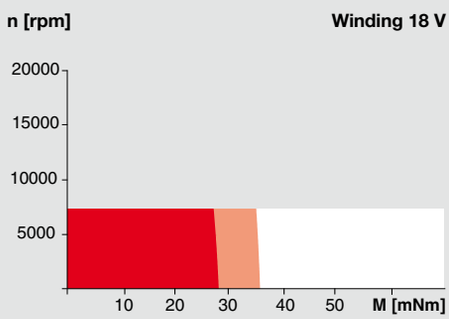

Specifications		Precious Metal Brushes					
Nominal voltage	V	6	12	18	24	36	48
No load speed	rpm	5870	4980	5740	5060	6020	5220
No load current	mA	51.0	20.0	16.4	10.2	8.82	5.36
Nominal current	A	1.50	1.30	1.01	0.66	0.52	0.32
Torque constant	mNm/A	9.73	22.9	29.9	45.2	57.0	87.6
Speed constant	rpm/V	981	416	320	211	168	109
Terminal resistance	Ω	0.343	1.84	3.01	7.25	11.4	29.9
Terminal inductance	mH	0.035	0.192	0.326	0.746	1.19	2.80

Configuration	dcx.maxonmotor.com
Bearing	Ball bearings preloaded/sleeve bearings
Commutation	Precious metal brushes with or without CLL/graphite brushes/EMI filter
Flange front/back	Standard flange/configurable flange/no flange
Shaft front/back	Length/diameter/flat face
Electric connection	Terminals or cable/alignment of connection/cable length/connector type

maxon Modular System	Page
maxon gear	
GPX 22	68–69
maxon sensor	
ENX 10 QUAD	74
ENX 16 EASY	75
ENC SCH16F	322
ENC 30 HEDL 5540	330
maxon motor control	
ESCON 36/2 DC	342
ESCON 50/5, Module 50/5	343
EPOS2 24/2	350
EPOS2 Module 36/2	350
EPOS2 24/5	351
EPOS2 50/5	351
EPOS2 P 24/5	354
EPOS3 70/10 EtherCAT	357
MAXPOS 50/5	360

Dimensions Standard Configuration — **M 1:1**

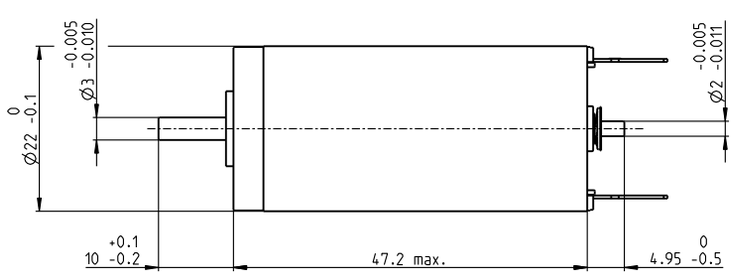

Shortest configuration possible: 44.7 mm

Configure and order your drive online.
dcx.maxonmotor.com

NEW

DCX 32 L brushed DC motor Ø32 mm

Configurable

Key Data		Graphite Brushes
Typical Speed/torque gradient	rpm/mNm	4.6
Max. nominal torque	mNm	129
Max. permissible speed	rpm	11300
Max. continuous output power/assigned power rating	W	110/70
Max. efficiency	%	90
Ambient temperature	°C	-40 … 100
Mech. time constant	ms	4.17
Therm. time constant winding	s	42.2
Rotor inertia	gcm²	75.4
Max. axial loading (dynamic)	N	7
Max. radial loading, 5 mm from flange	N	65.3
Typical noise level	dBA	47
Weight	g	300

Operating Range — **Graphite Brushes**

- Continuous operation
- Continuous operation with reduced thermal resistance Rth_2 50%
- Intermittent operation

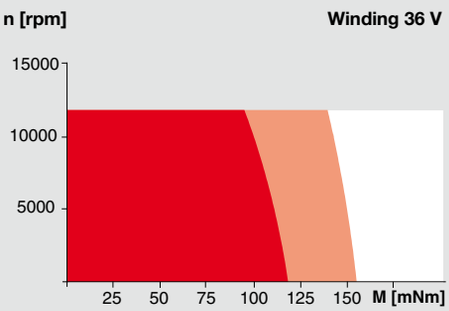

Specifications		Graphite Brushes					
Nominal voltage	V	12	18	24	36	48	60
No load speed	rpm	6690	8300	8050	7940	7780	5840
No load current	mA	269	230	163	103	75	42
Nominal current	A	4.92	4.22	3.46	2.93	2.20	1.36
Torque constant	mNm/A	15.6	19.5	27.3	42.9	58.5	97.5
Speed constant	rpm/V	612	490	350	223	163	97.9
Terminal resistance	Ω	0.150	0.203	0.379	0.764	1.400	4.120
Terminal inductance	mH	0.034	0.053	0.103	0.254	0.473	1.310

Configuration	dcx.maxonmotor.com
Bearing	Ball bearings preloaded
Commutation	Graphite brushes
Flange front/back	Standard flange/configurable flange/no flange
Shaft front/back	Length/diameter/flat face
Electric connection	Terminals or cable/alignment of connection/cable length/connector type

maxon Modular System	Page
maxon gear	
GPX 32	70
maxon sensor	
ENX 10 QUAD	74
ENX 16 EASY	75
ENC 2RMHF	323
ENC 30 HEDL 5540	330
maxon motor control	
ESCON 50/5	343
ESCON Module 50/5	343
ESCON 70/10	343
EPOS2 24/5	351
EPOS2 50/5	351
EPOS2 70/10	351
EPOS2 P 24/5	354
EPOS3 70/10 EtherCAT	357
MAXPOS 50/5	360

Dimensions Standard Configuration — **M 1:2**

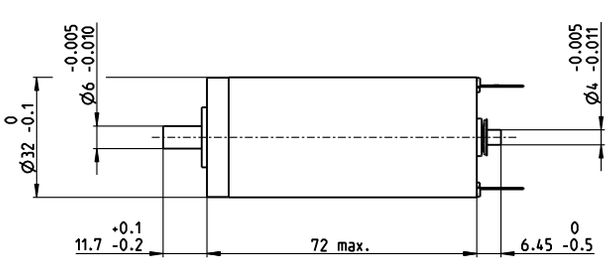

Shortest configuration possible: 68.4 mm

Configure and order your drive online.
dcx.maxonmotor.com

DCX 35 L brushed DC motor Ø35 mm

Configurable

Key Data		Graphite Brushes
Typical Speed/torque gradient	rpm/mNm	3.8
Max. nominal torque	mNm	138
Max. permissible speed	rpm	12300
Max. continuous output power/assigned power rating	W	120/80
Max. efficiency	%	90
Ambient temperature	°C	-40 ... +100
Mech. time constant	ms	3.91
Therm. time constant winding	s	43.9
Rotor inertia	gcm^2	98.6
Max. axial loading (dynamic)	N	Ball bearings: 7
Max. radial loading , 5 mm from flange	N	Ball bearings: 65.3
Typical noise level	dBA	48
Weight	g	385

Operating Range — **Graphite Brushes**

- Continuous operation
- Continuous operation with reduced thermal resistance Rth_2 50%
- Intermittent operation

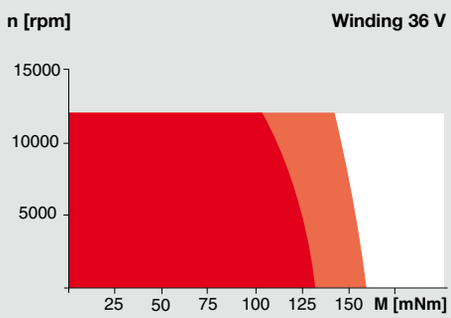

Specifications		Graphite Brushes					
Nominal voltage	V	12	18	24	36	48	60
No load speed	rpm	8130	7200	7720	7940	6670	7690
No load current	mA	320	177	146	101	58.6	57.5
Nominal current	A	6.00	5.32	4.26	3.07	2.08	1.84
Torque constant	mNm/A	13.7	23.4	29.3	42.9	68.3	74.1
Speed constant	rpm/V	699	408	326	223	140	129
Terminal resistance	Ω	0.079	0.212	0.346	0.716	1.76	2.16
Terminal inductance	mH	0.026	0.077	0.121	0.260	0.658	0.776

Configuration	dcx.maxonmotor.com
Bearing	Ball bearings preloaded
Commutation	Graphite brushes
Flange front/back	Standard flange/configurable flange/no flange
Shaft front/back	Length/diameter/flat face
Electric connection	Terminals or cable/alignment of connection/cable length/connector type

maxon Modular System	Page
maxon gear	
GPX 42	71
maxon sensor	
ENX 10 QUAD	74
ENX 16 EASY	75
ENC 2RMHF	323
ENC 30 HEDL 5540	330
maxon motor control	
ESCON 50/5	343
ESCON Module 50/5	343
ESCON 70/10	343
EPOS2 24/5	351
EPOS2 50/5	351
EPOS2 70/10	351
EPOS2 P 24/5	354
EPOS3 70/10 EtherCAT	357
MAXPOS 50/5	360

Dimensions Standard Configuration — **M 1:2**

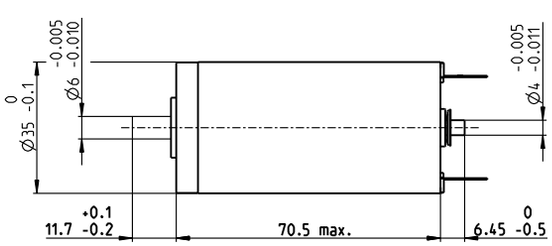

Shortest configuration possible: 66.9 mm

maxon GPX

MAXON GPX GEAR

maxon GPX gearheads make an impression with the highest power transmission in a very short compact design. The modular construction and the scaled stages form the basis for a custom made drive solution. High torque, high speed, low noise, low backlash; maxon GPX gearheads fulfill practically all requirements.

maxon GPX gearheads can be configured and ordered online. dcx.maxonmotor.com

maxon motor

driven by precision

Configure and order your drive online.
dcx.maxonmotor.com

GPX 10 Planetary Gearhead Ø10 mm

Configurable

Key Data		Standard Configuration
Max. transmittable power	W	1.6
Max. continuous torque	Nm	0.15
Max. continuous input speed	rpm	12000
Ambient temperature	°C	-15 ... +85
Bearing at output		Ball bearing

Operating Range (output shaft) — **Standard Configuration**

Continuous operation

Intermittent operation

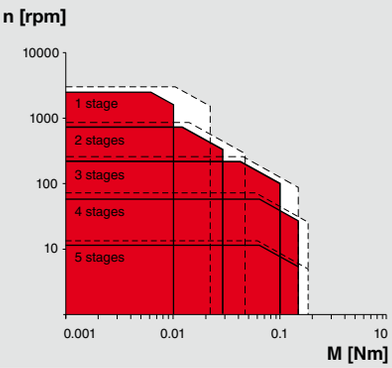

Specifications		Standard Configuration				
Number of stages		1	2	3	4	5
Max. transmittable continuous power	W	1.6	1.2	1.0	0.4	0.10
Max. transmittable intermittent power	W	2.0	1.5	1.3	0.5	0.13
Max. continuous torque	Nm	0.010	0.030	0.10	0.15	0.15
Max. intermittent torque	Nm	0.020	0.050	0.15	0.20	0.20
Max. continuous input speed	rpm	12000	12000	12000	12000	12000
Max. intermittent input speed	rpm	15000	15000	15000	15000	15000
Max. efficiency	%	90	81	73	65	59
Average backlash no load	°	1.5	1.8	2	2.2	2.5
Max. axial loading (dynamic)	N	5	5	5	5	5
Max. radial loading, 5 mm from flange	N	5	10	15	20	25
Gearhead length L1	mm	10.4	14.1	17.2	20.4	23.5
Weight	g	6.7	7.2	7.7	8.2	8.7

Configuration		Standard Configuration				
Number of stages		1	2	3	4	5
Reduction	X:1	4	16	64	256	1024
Version		Standard				
Flange		Standard flange				
Shaft		Length/flat face				

maxon Modular System	Page
maxon DC motor	
DCX 10 S	58
DCX 10 L	59

Dimensions Standard Configuration — **M 2:1**

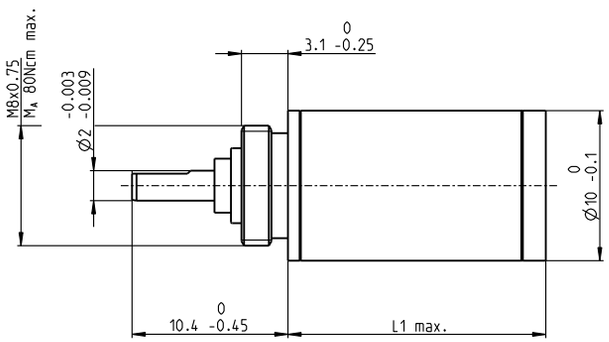

Configure and order your drive online.
dcx.maxonmotor.com

NEW

GPX 16 Planetary Gearhead Ø16 mm

Configurable

maxon X drives

Key Data		Standard Configuration
Max. transmittable power	W	6.2
Max. continuous torque	Nm	0.18
Max. continuous input speed	rpm	14000
Ambient temperature	°C	-40 ... +100
Bearing at output		Ball bearing

Operating Range (output shaft) | **Standard Configuration**

Continuous operation

Intermittent operation

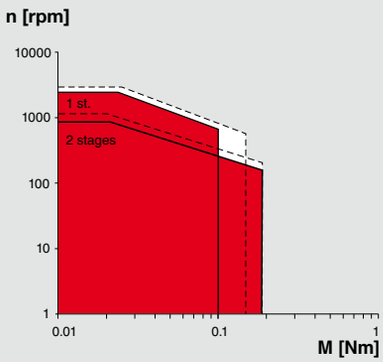

Specifications		Standard Configuration	
Number of stages		1	2
Max. transmittable continuous power	W	6.2	3.1
Max. transmittable intermittent power	W	7.8	3.9
Max. continuous torque	Nm	0.10	0.18
Max. intermittent torque	Nm	0.15	0.23
Max. continuous input speed	rpm	12000	14000
Max. intermittent input speed	rpm	15000	17500
Max. efficiency	%	90	80
Average backlash no load	°	1.4	1.6
Max. axial loading (dynamic)	N	12	12
Max. radial loading, 5 mm from flange	N	20	60
Gearhead length L1	mm	15.8	20.7
Weight	g	20	25

Configuration		Standard Configuration	
Number of stages		1	2
Reduction	X:1	3.9, 5.3, 6.6	16, 21, 26, 28, 35, 44
Version		Standard	
Flange		Standard flange/configurable flange	
Shaft		Length/flat face	

maxon Modular System	Page
maxon DC motor	
DCX 16 S	60

Dimensions Standard Configuration **M 1:1**

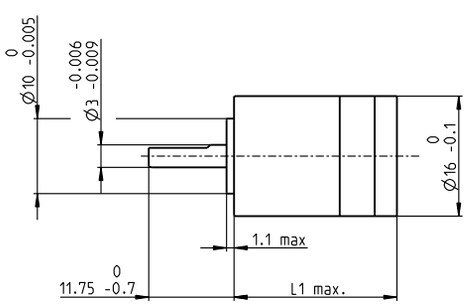

Configure and order your drive online.
dcx.maxonmotor.com

NEW

GPX 22 Planetary Gearhead Ø22 mm

Configurable

Key Data		Standard Configuration	Ceramic Version
Max. transmittable power	W	24	30
Max. continuous torque	Nm	1.5	2.3
Max. continuous input speed	rpm	12000	12000
Ambient temperature	°C	-40 ... +100	-40 ... +100
Bearing at output		Ball bearing	Ball bearing

Operating Range (output shaft)

Continuous operation

Intermittent operation

Standard Configuration

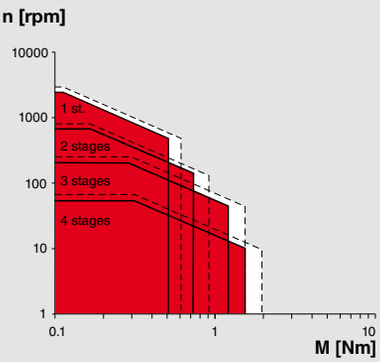

Ceramic Version

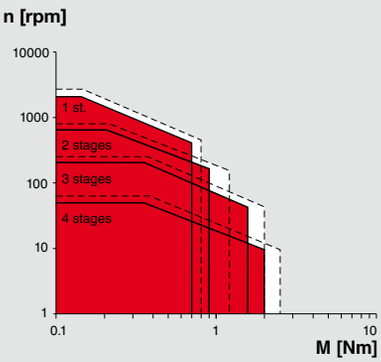

Specifications		Standard Configuration				Ceramic Version			
Number of stages		1	2	3	4	1	2	3	4
Max. transmittable continuous power	W	24.0	12.0	6.0	1.6	30.0	15.0	7.0	2.0
Max. transmittable intermittent power	W	30.0	15.0	7.5	2.0	38.0	19.0	9.0	2.5
Max. continuous torque	Nm	0.50	0.70	1.20	1.50	0.70	0.90	1.60	2.00
Max. intermittent torque	Nm	0.60	0.90	1.50	1.90	0.80	1.20	2.00	2.50
Max. continuous input speed	rpm	8000	10000	12000	12000	8000	10000	12000	12000
Max. intermittent input speed	rpm	10000	12500	15000	15000	10000	12500	15000	15000
Max. efficiency	%	90	81	74	66	90	81	74	66
Average backlash no load	°	1.4	1.6	1.75	1.9	1.4	1.6	1.75	1.9
Max. axial loading (dynamic)	N	100	100	100	100	100	100	100	100
Max. radial loading, 10 mm from flange	N	35	55	70	70	35	55	70	70
Gearhead length L1	mm	18.5	25.0	29.6	33.9	18.5	25.0	29.6	33.9
Weight	g	42	52	57	63	42	52	57	63

Configuration		Standard Configuration				Ceramic Version			
Number of stages		1	2	3	4	1	2	3	4
Reduction	X:1	3.9, 5.3, 6.6	16, 21, 26, 28, 35, 44	62, 83, 103, 111, 138, 150, 172, 186, 231	243, 326, 406, 439, 546, 590, 679, 734, 794, 913, 987, 1135, 1227, 1526	3.9, 5.3, 6.6	16, 21, 26, 28, 35, 44	62, 83, 103, 111, 138, 150, 172, 186, 231	243, 326, 406, 439, 546, 590, 679, 734, 794, 913, 987, 1135, 1227, 1526
Version		Standard/ceramic version/noise reduced/reduced backlash							
Flange		Standard flange/configurable flange							
Shaft		Length/flat face/cross hole							

maxon Modular System	Page
maxon DC motor	
DCX 22 S	61
DCX 22 L	62

Dimensions M 1:1

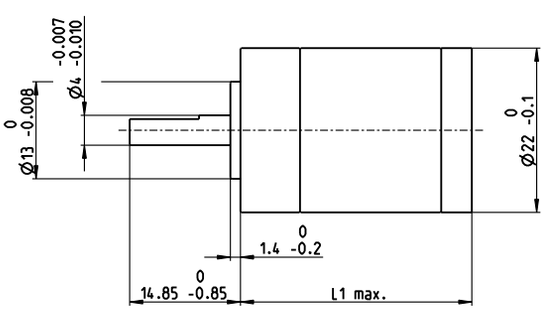

Configure and order your drive online.
dcx.maxonmotor.com

NEW

GPX 22 Planetary Gearhead Ø22 mm

Configurable

maxon X drives

Key Data		Noise Reduced	Backlash Reduced
Max. transmittable power	W	20	12
Max. continuous torque	Nm	1.2	1.5
Max. continuous input speed	rpm	12000	12000
Ambient temperature	°C	-40 ... +85	-40 ... +100
Bearing at output		Ball bearing	Ball bearing
Typical noise level	dBA	-5 dBA compared to standard configuration	

Operating Range (output shaft)

Continuous operation

Intermittent operation

Noise Reduced

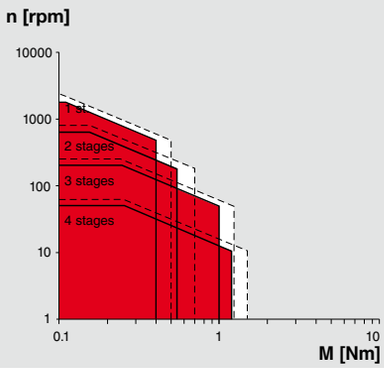

Backlash Reduced

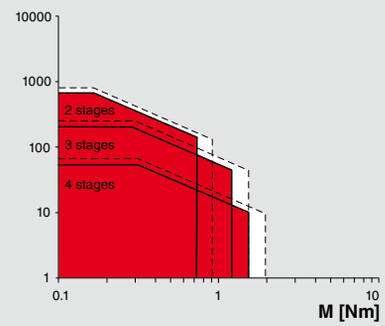

Specifications		Noise Reduced				Backlash Reduced		
Number of stages		1	2	3	4	2	3	4
Max. transmittable continuous power	W	20.0	10.0	5.0	1.3	12.0	6.0	1.6
Max. transmittable intermittent power	W	25.0	13.0	6.3	1.6	15.0	7.5	2.0
Max. continuous torque	Nm	0.40	0.55	1.00	1.20	0.70	1.20	1.50
Max. intermittent torque	Nm	0.50	0.70	1.25	1.50	0.90	1.50	1.90
Max. continuous input speed	rpm	8000	10000	12000	12000	10000	12000	12000
Max. intermittent input speed	rpm	10000	12500	15000	15000	12500	15000	15000
Max. efficiency	%	90	81	74	66	81	74	66
Average backlash no load	°	1.4	1.6	1.75	1.9	1.1	1.25	1.4
Max. axial loading (dynamic)	N	100	100	100	100	100	100	100
Max. radial loading, 10 mm from flange	N	35	55	70	70	55	70	70
Gearhead length L1	mm	18.5	25.0	29.6	33.9	25.0	29.6	33.9
Weight	g	42	52	57	63	52	57	63

Configuration		Noise Reduced				Backlash Reduced		
Number of stages		1	2	3	4	2	3	4
Reduction	X:1	3.9, 5.3, 6.6	16, 21, 26, 28, 35, 44	62, 83, 103, 111, 138, 150, 172, 186, 231	243, 326, 406, 439, 546, 590, 679, 734, 794, 913, 987, 1135, 1227, 1526	16, 21, 26, 28, 35, 44	62, 83, 103, 111, 138, 150, 172, 186, 231	243, 326, 406, 439, 546, 590, 679, 734, 794, 913, 987, 1135, 1227, 1526
Version		Standard/ceramic version/noise reduced/backlash reduced						
Flange		Standard flange/configurable flange						
Shaft		Length/flat face/cross hole						

maxon Modular System	Page
maxon DC motor	
DCX 22 S	61
DCX 22 L	62

Dimensions M 1:1

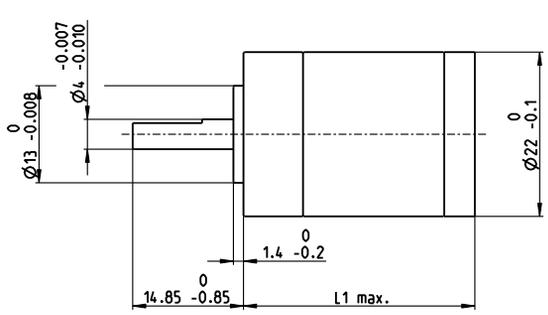

Configure and order your drive online.
dcx.maxonmotor.com

GPX 32 Planetary Gearhead Ø32 mm

Configurable

NEW

Key Data		Standard Configuration
Max. transmittable power	W	100
Max. continuous torque	Nm	2.9
Max. continuous input speed	rpm	7000
Ambient temperature	°C	-40 ... +100
Bearing at output		Ball bearing

Operating Range (output shaft) | **Standard Configuration**

Continuous operation

Intermittent operation

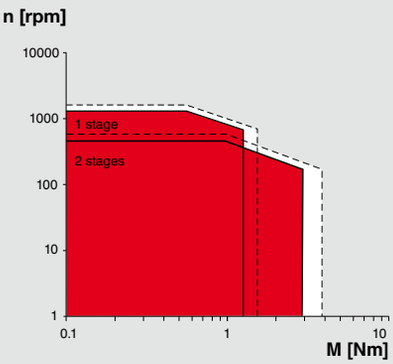

Specifications		Standard Configuration	
Number of stages		1	2
Max. transmittable continuous power	W	100	50
Max. transmittable intermittent power	W	125	62
Max. continuous torque	Nm	1.25	2.90
Max. intermittent torque	Nm	1.60	3.60
Max. continuous input speed	rpm	6000	7000
Max. intermittent input speed	rpm	7500	8750
Max. efficiency	%	90	80
Average backlash no load	°	1.4	1.5
Max. axial loading (dynamic)	N	120	120
Max. radial loading, 10 mm from flange	N	90	140
Gearhead length L1	mm	26.7	36.3
Weight	g	140	185

Configuration		Standard Configuration	
Number of stages		1	2
Reduction	X:1	3.9, 5.3	16, 21, 26, 28, 35
Version		Standard	
Flange		Standard flange/configurable flange	
Shaft		Length/flat face/cross hole	

maxon Modular System	Page
maxon DC motor	
DCX 32 L	63

Dimensions Standard Configuration **M 1:2**

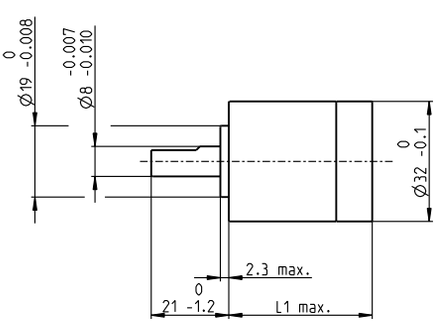

Configure and order your drive online.
dcx.maxonmotor.com

GPX 42 Planetary Gearhead Ø42 mm

Configurable

Key Data		Standard Configuration
Max. transmittable power	W	580
Max. continuous torque	Nm	15.0
Max. continuous input speed	rpm	8000
Ambient temperature	°C	-40 ... +100
Bearing at output		Ball bearing

Operating Range (output shaft) — **Standard Configuration**

Continuous operation

Intermittent operation

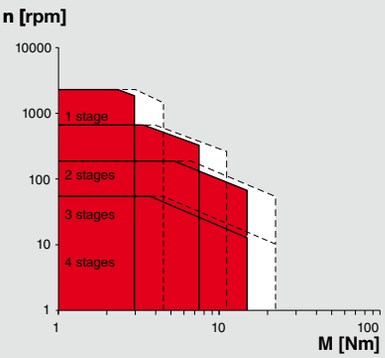

Specifications		Standard Configuration			
Number of stages		1	2	3	4
Max. transmittable continuous power	W	580	240	100	20.0
Max. transmittable intermittent power	W	725	300	125	25
Max. continuous torque	Nm	3.0	7.5	15.0	15.0
Max. intermittent torque	Nm	4.5	11.3	22.5	22.5
Max. continuous input speed	rpm	8000	8000	8000	8000
Max. intermittent input speed	rpm	10000	10000	10000	10000
Max. efficiency	%	90	81	72	64
Average backlash no load	°	0.6	0.8	1.0	1.0
Max. axial loading (dynamic)	N	150	150	150	150
Max. radial loading, 12 mm from flange	N	120	240	360	360
Gearhead length L1	mm	37.4	51.9	66.4	80.9
Weight	g	260	360	460	560

Configuration		Standard Configuration			
Number of stages		1	2	3	4
Reduction	X:1	3.5, 4.3	12, 15, 19, 21, 26	43, 53, 66, 74, 81, 113, 126, 156	150, 186, 230, 257, 285, 319, 353, 394, 441, 488, 546, 676, 756, 936
Version		Standard			
Flange		Standard flange/configurable flange			
Shaft		Length/feather key			

maxon Modular System	Page
maxon DC motor	
DCX 35 L	64

Dimensions Standard Configuration — **M 1:2**

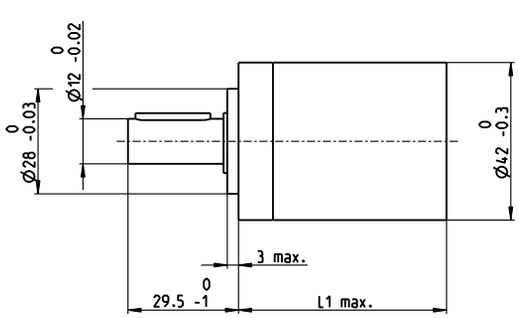

Configure and order your drive online.
dcx.maxonmotor.com

For your personal notes.

maxon ENX

MAXON ENX ENCODER

maxon ENX encoders make an impression with their robust design and high signal quality. The 3-channel encoder with differential signals guarantees interference-free function even under the highest loads. The resolution can be factory-set. EASY is an incremental encoder based on the Hall effect. With the QUAD you get a 1-count encoder for rotation direction and speed recognition.

maxon ENX encoders can be configured and ordered online. dcx.maxonmotor.com

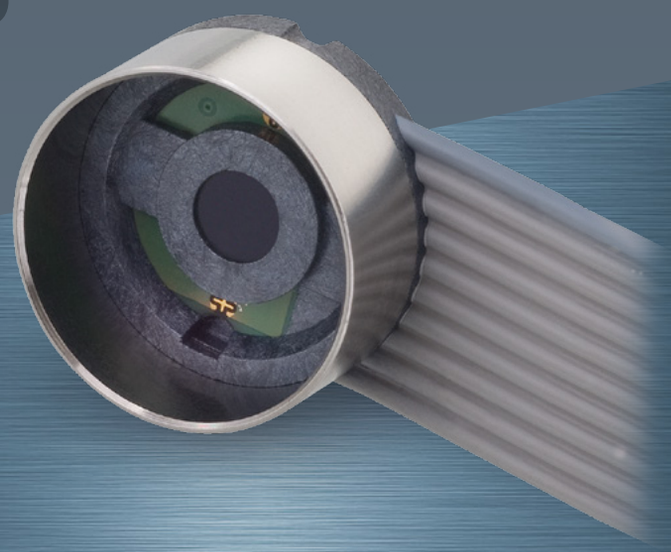

maxon motor

driven by precision

Configure and order your drive online.
dcx.maxonmotor.com

ENX 10 Encoder Ø10 mm

Configurable

Key Data		EASY	QUAD
Number of channels		3	2
Max. counts per turn		1024	1
Encoder length L max.	mm	8.5	9
Ambient temperature	°C	-40 ... +100	-40 ... +100
Weight	g	<5	<5

Selection criteria	EASY	QUAD
Speed and rotation direction detection	■	■
Speed and position control	■	▲
Compact and robust design	■	■
High resolution	■	●
Cost effective	■	■

■ suitable ▲ suitable to a limited extent ● not suitable

Specifications		EASY	QUAD
Supply voltage Vcc	V	5 ±0.5	5 ±0.5
Max. operating frequency	kHz	500	2
Max. Speed	rpm	30000	30000
Connector		10-pin 1.27 mm multipoint connector e.g. Samtec FTSH series Pin 1: Do not connect[1] Pin 2: V_{CC} Pin 3: GND Pin 4: Do not connect[1] Pin 5: Channel $\overline{A}$ Pin 6: Channel A Pin 7: Channel $\overline{B}$ Pin 8: Channel B Pin 9: Channel $\overline{I}$ Pin 10: Channel I	10-pin 2.54 mm multipoint connector (IEC/EN 60603-1-DIN41651) Pin 1: Not connected Pin 2: V_{CC} Pin 3: Channel A Pin 4: Channel B Pin 5: GND Pin 6: Not connected Pin 7: Not connected Pin 8: Not connected Pin 9: Not connected Pin 10: Not connected

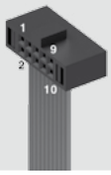

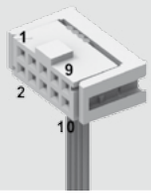

Configuration		EASY	QUAD
Counts per turn[2]		1 ... 128, 256, 512, 1024	1
Cable length	mm	50, 100, 150, 200, 300, 500, 1000	50, 100, 150, 200, 300, 500, 1000
Alignment of cable outlet in relation to motor (pitch)	°	15	15

maxon Modular System	Page
maxon DC motor	
DCX 10 S	58
DCX 10 L	59
DCX 16 S	60
DCX 22 S	61
DCX 22 L	62
DCX 32 L	63
DCX 35 L	64

Dimensions Standard Configuration M 1:1

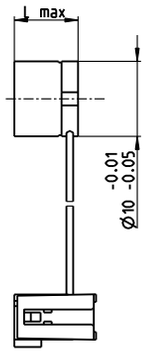

Notes

[1] Applying voltage to these pins can destroy the encoder.
[2] maxon controllers require a resolution of at least 16 pulses.

Configure and order your drive online.
dcx.maxonmotor.com

ENX 16 Encoder Ø16 mm

Configurable

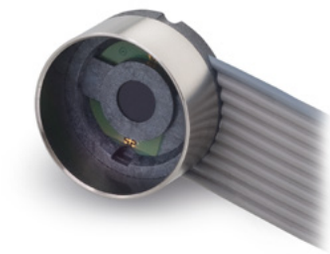

Key Data		EASY
Number of channels		3
Max. counts per turn		1024
Encoder length L max.	mm	8.5
Ambient temperature	°C	-40 ... +100
Weight	g	7

Selection criteria	EASY
Speed and rotation direction detection	■
Speed and position control	■
Compact and robust design	■
High resolution	■
Cost effective	■

■ suitable ▲ suitable to a limited extent ● not suitable

Specifications		EASY
Supply voltage Vcc	V	5 ±0.5
Max. operating frequency	kHz	500
Max. Speed	rpm	30000
Connector		10-pin 2.54 mm multipoint connector (IEC/EN 60603-1-DIN41651) Pin 1: Do not connect[1] Pin 2: V_{CC} Pin 3: GND Pin 4: Do not connect[1] Pin 5: Channel $\overline{A}$ Pin 6: Channel A Pin 7: Channel $\overline{B}$ Pin 8: Channel B Pin 9: Channel $\overline{I}$ Pin 10: Channel I

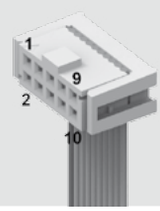

Configuration		EASY
Counts per turn[2]		1 ... 128, 256, 512, 1024
Cable length	mm	50, 100, 150, 200, 300, 500, 1000
Alignment of cable outlet in relation to motor (pitch)	°	15

maxon Modular System	Page
maxon DC motor	
DCX 22 S	61
DCX 22 L	62
DCX 35 L	64

Dimensions Standard Configuration M 3:4

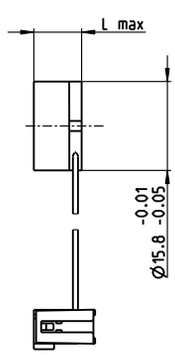

Notes

[1] Applying voltage to these pins can destroy the encoder.
[2] maxon controllers require a resolution of at least 16 pulses.

Explanation for Terminology maxon X drives

Alignment of cable outlet in relation to motor (pitch) [°]
is the pitch in which angle distances of the cable output from the encoder to the cable output of the motor can be aligned (configured).

Ambient temperature [°C]
is the temperature range in which the drive may be operated. It results from the temperature resistance of the materials used and the viscosity of the bearing lubrication. At extremely low temperatures, significantly higher frictional torque is to be expected.

Average backlash no load [°]
is the angle of rotation that the gearhead output shaft rotates with the input shaft blocked when it is rotated from a stop position in the opposite direction. The stop position depends on the torque applied to the output shaft. It should be noted that with the output shaft blocked, due to the inverted reduction ratio, the motor shaft rotates through a much larger angle from stop to stop.

Cable length [mm]
is the configurable cable length including plug measured from the drive housing.

Continuous operation
is the operation area in which the drive may be continuously operated. The indicated area corresponds to maxon testing conditions where the drive is mounted on a plastic plate. If the thermal resistance between drive and air can be reduced (example 50 %) then the drive may also be operated in a wider range.

Counts per turn
is the configurable number of pulses which, per revolution, are output on a channel.

Encoder length L_{max} [mm]
is the maximum length of the encoder up to the axial mounting surface of the motor. The necessary encoder flange between motor and encoder is not contained in the encoder length.

Gearhead length L1 [mm]
is the maximum length of the gearhead up to the axial mounting surface of the motor. The necessary gearhead flange between motor and gearhead is contained in the gearhead length.

Intermittent operation
is the operation area in which the drive may be operated for a short time. The maximum winding temperature must not be exceeded.

Max. axial loading [N]
is the permissible axial loading in operation. If different values apply for traction and thrust, the smaller value is given.

Max. continuous input speed [rpm]
is the maximum recommended input speed which may apply continuously at the output shaft. It is based on life span considerations. If this value is greatly exceeded, the life span can be shortened, the gear heats up more and more noise is generated.

Max. continuous output power [W]
is the maximum mechanical power that the motor can output continuously without overheating.

Max. continuous torque [Nm]
is the maximum torque that can be applied permanently to the output shaft. If it is exceeded, the life span is significantly shortened.

Max. counts per turn
is the maximum possible number of counts per turn. For EASY encoders, the counts per turn can be configured.

Max. efficiency [%]
is the optimal ratio between power input and power output. The specified efficiency for motors applies for loads above approx. half the continuous torque.

Max. intermittent input speed [rpm]
is the maximum input speed that may be applied for a short-time* at the input. It is based on life span considerations. Significantly exceeding this value can shorten the life span, the gearhead will heat up rapidly and the noise level will increase.

Max. intermittent torque [Nm]
is the maximum torque that can be applied for short time to the output shaft. If it is exceeded, the life span is significantly shortened.

Max. nominal torque [mNm]
is the maximum continuous torque that can be generated when operating with nominal voltage and nominal current at a motor temperature of 25 °C. It is at the limit of the continuous operating range of the motor. Higher torques will lead to impermissible heating of the winding.

Max. operating frequency [kHz]
is the maximum, electrical output frequency with which the encoder can be properly operated.

Max. permissible speed [rpm]
is the maximum recommended speed based on the commutation. For higher speeds, a reduction in the life span can be expected.

Max. radial loading [N]
is the permissible radial loading in operation. The value is given for a typical clearance from the flange; this value falls the greater the clearance.

Max. transmittable continuous power [W]
is the maximum continuous output available at the output shaft without shortening the life span. When it is exceeded the life span is greatly reduced.

Max. transmittable intermittent power [W]
is the maximum output available for a short-time* at the output shaft. When it is exceeded the life span is greatly reduced.

Mech. time constant [ms]
is the time required for the rotor to accelerate from standstill to 63 % of its no load speed.

No load speed [rpm] **±10 %**
is the speed at which the motor turns at nominal voltage and without load. It is approximately proportional to the applied voltage.

No load current [mA] **±50 %**
is the typical current that the unloaded motor draws when operating at nominal voltage. It depends on brush friction and friction in the bearings, and also increases with rising speed. No load friction depends heavily on temperature, particularly with precious metal commutation. In extended operation, no load friction decreases and increases at lower temperatures.

Nominal current [A]
is the current which, at an ambient temperature of 25 °C and with continuous operation, heats the winding up to the maximum permissible temperature (= maximum permissible continuous current). As a result of additional frictional losses indecreases slightly when the speed increases.

Nominal voltage [V]
is the DC voltage on the motor connections on which all nominal data are based. Higher and lower voltages are permissible as long as they do not exceed the limit values.

Number of channels
is the number of available output channels (A, B, I).

Number of stages
is the number of gearhead stages connected in series.

Output stage
is designed for high torques. It can be configured to fit the specific application.

Plug pitch [mm]
is the distance between pins of the plug in mm.

Reduction
is the factor by which the speed of the gearhead output shaft is smaller than the motor speed (rounded value).

Rotor inertia [gcm^2]
is the mass moment of inertia of the rotor, based on the axis of rotation.

Speed constant kn [rpm/V]
is the ideal no load speed per 1 volt of applied voltage.

Supply voltage [V]
is the voltage range that may be applied to the encoder as DC voltage.

Terminal resistance R [W]
is the resistance measured at 25 °C at the terminals (without cables) and determines the starting current at a given voltage. For graphite brushes it should be noted that resistance is load-dependent and the value only applies to large currents.

Terminal inductance [mH]
is the winding inductance when stationary and measured at 1 kHz, sinusoidal.

Therm. time constant winding [s]
is the typical reaction time for a temperature change of winding.

Torque constant k_M [mNm/A]
is the quotient from generated torque and applicable current. Also known as “specific torque”.

Typical noise level [dBA]
is that statistical average of the noise level measured according to maxon standard (10 cm distance radially to the drive, no load operation at a speed of 6,000 rpm. The drive lies freely on a plastic foam mat in the noise chamber).

The acoustic noise level depends on a number of factors, such as component tolerances, and it is greatly influenced by the overall system in which the drive is installed. When the drive is installed in an unfavorable constellation, the noise level may be significantly higher than the noise level of the drive alone.

The acoustic noise level is measured and determined during product qualification. In manufacturing, a structure-borne noise test is performed with defined limits. Impermissible deviations can thus be identified.

Typical speed/torque gradient [rpm/mNm]
provides information on the strength of the motor. The smaller this value is, the stronger the motor is and the less the speed changes when the load fluctuates. It is calculated from the quotient of ideal no load speed and ideal stall torque.

Weight [g]
is the weight of the drive component.

*) short-time

duration of max. 1 second

duration of max. 10 % of the operating cycle

maxon Standard Specification
All product-specific information is based on maxon standard specification no. 100 and no. 102. These specifications can be found at www.maxonmotor.com, in the general terms and conditions.

maxon DC motor

maxon DC motor

maxon DC motors are high-quality motors fitted with powerful permanent magnets. At the core of the motor, is the unique ironless maxon winding. For you, this means cutting-edge technology in compact, powerful and low inertia drives.

Standard Specification No. 100	78
Explanation of the DC motors	79
RE-Program	80–116
A-max Program	119–144
RE-max Program	147–166

maxon Standard Specification

With our Standard Specification we offer you a means to judge maxon motors in the most important respects. To our knowledge it covers normal applications. The Standard Specification is part of our "General Conditions of Sale".

Electrical equipment must meet certain minimum requirements, which was introduced into the European market after 1.1.96. Small motors will be identified as components and will therefore represent no seperate electrical equipment within the sense of the guidelines.

For information on standards and directives, refer to page 14 and 15.

The Standard Specification No. 100 for maxon DC motor

1. **Principles**
The **standard specification** describes tests carried out on the **finished motor and during the production process.** In order to guarantee our high quality standard, we check materials, parts and subassemblies through the manufacturing process and the complete motor. The obtained measurements are recorded and can be made available to customers if required. Random sampling plans are according to ISO 2859, MIL STD 105E and DIN/ISO 3951 (inspection by attributes, sequential sampling, variables inspection) as well as internal manufacturing controls. This specification always applies unless a different one has been agreed between the customer and maxon.

2. **Data**

2.1 **Electrical data** apply at 22° to 25°C. Data control within one minute running time.

Measurement voltage	+/- 0.5 % for voltages ≥ 3V and ± 0.015 V for voltages ≤ 3V
No load speed	± 10%
No load current	≤ maximum specified value
Sense of rotation	cw = clockwise
Motor position	horizontal

Notes: Measurement voltage may vary from the nominal voltage listed in the catalog. The no load current specified in the catalog is a typical value and not the maximum one. By connecting the red wires or if voltage is applied to the '+' Terminal, shaft rotation is cw (clockwise) as seen from the mounting end. For ccw running, the specified tolerance data may only be marginally exceeded.
Terminal resistance: Winding resistance is verified in the manufacturing process through spot checks on a representative basis. Terminal resistance is determined at product certification. It should be noted that terminal resistance depends on the rotor's rotational position. As transfer resistance depends on current density in graphite brushes, measuring resistance with an ohmmeter if the current is low does not give reasonable results. Too low a reading is produced with precious metal brush motors if the brushes bridge two commutator segments, thereby short-circuiting one coil segment.
Inductance is determined at product certification. Test frequency is 1 kHz. The motor's terminal inductance depends on frequency.
Commutation: An oscilloscope is used to check the neutral setting and test for electrical faults, such as interrupted winding or short-circuit between turns. Commutation displays for precious metal brushes and graphite brushes are not directly comparable. Precious metal brushes display a clear commutation picture which remains interference free up to the motor's recommended maximum speed, but with graphite brushes, this is only expected up to around one third of that. In addition, it should be noted that the contact resistance of graphite brushes and the torque constant may change during the run-in period due to increased brush seating. As a result, no load current and speed may drift marginally. The same effect may also be observed if motors are being operated under no load condition over a longer period.

2.2 **Mechanical data** per outline drawing: Standardmeasuring instruments (for electrical length measuring DIN 32876, micrometer per DIN 863, dial indicator DIN 878, calliper per DIN 862, bore calliper DIN 2245, thread calliper per DIN 2280 and others) are used.

2.3 **Rotor imbalance:** Rotors are balanced according to standard data or customer requirements during manufacturing.

2.4 **Noise:** Tests are carried out for anomalies within a lot, on a subjective basis. Depending on speed, the motions in the motor cause noise and vibration of varying degrees, frequency and intensity. The noise level experienced with a single sample unit should not be interpreted as indicative of the noise or vibration level to be expected of future deliveries.

2.5 **Service life:** Durability tests are carried out under uniform internal criteria as part of product certification. A motor's service life essentially depends on the operating and ambient conditions. Consequently, the many possible variations do not allow us to make a general statement on service life.

2.6 **Environmental influences**
Protection against corrosion: Our products are tested during product certification on the basis of DIN EN 60068-2-30.
Coating of components: Surface treatment and coating procedures used by maxon are selected on the basis of their merits to resist corrosion. These treatments are evaluated at product certification according to their applicable standard.

3. Parameters that differ from or are additional to the data sheet can be specified and will be then a central part of our systematic testing as the customer's specification. Test/inspection certificates are issued by prior agreement.

January 2010 edition / subject to change

Explanation of the pages 80–166

Dimensional drawings
Presentation of the views according to the projection method E (ISO).
All dimensions in [mm].

Mounting threads in plastic
Screwed connections on motors with plastic flanges require special attention.

M_A Max. tightening torque [Ncm]
A torque screw driver may be adjusted to this value.

L Active depth of screw connection [mm]
The relation of the depth of the screw connection to the thread diameter must be at least 2:1. The depth of the screw connection must be less than the usable length of the thread!

Motor Data
The values stated are based on a motor temperature of 25°C (so-called cold data).

Line 1 Nominal voltage U_N [Volt]
is the DC voltage on the motor connections on which all nominal data are based (lines 2–9). Lower and higher voltages are permissible, provided set limits are not exceeded.

Line 2 No load speed n_0 [rpm] ±10%
This is the speed at which the motor turns at nominal voltage and without load. It is approximately proportional to the applied voltage.

Line 3 No load current I_0 [mA] ±50%
This is the typical current that the unloaded motor draws when operating at nominal voltage. It depends on brush friction and friction in the bearings, and also increases with rising speed. No load friction depends heavily on temperature, particularly with precious metal commutation. In extended operation, no load friction decreases and increases at lower temperatures.

Line 4 Nominal speed n_N [rpm]
is the speed set for operation at nominal voltage and nominal torque at a motor temperature of 25°C.

Line 5 Nominal torque M_N [mNm]
is the torque generated for operation at nominal voltage and nominal current at a motor temperature of 25°C. It is at the limit of the motor's continuous operation range. Higher torques heat up the winding too much.

Line 6 Nominal current I_N [A]
is the current that, at 25°C ambient temperature, heats the winding up to the maximum permissible temperature (= max. permissible continuous current). I_N decreases as speed increases due to additional friction losses.

Line 7 Stall torque M_H [mNm]
is the torque produced by the motor when at standstill. Rising motor temperatures reduce stall torque.

Line 8 Starting current I_A [A]
is the quotient from nominal voltage and the motor's terminal resistance. Starting current is equivalent to stall torque. With larger motors, I_A cannot often be reached due to the amplifier's current limits.

Line 9 Maximum efficiency η_{max} [%]
is the optimal relationship between input and output power at nominal voltage. It also doesn't always denote the optimal operating point.

Line 10 Terminal resistance R [Ω]
is the resistance at the terminals at 25°C and determines the starting current at a given voltage. For graphite brushes, it should be noted that resistance is load-dependent and the value only applies to large currents.

Line 11 Terminal inductance L [mH]
is the winding inductance when stationary and measured at 1 kHz, sinusoidal.

Line 12 Torque constant k_M [mNm/A]
This may also be referred to as "specific torque" and represents the quotient from generated torque and applicable current.

Line 13 Speed constant k_n [rpm/V]
shows the ideal no load speed per 1 volt of applied voltage. Friction losses not taken into account.

Line 14 Speed / torque gradient $\Delta n / \Delta M$ [rpm/mNm]
The speed / torque gradient is an indicator of the motor's performance. The smaller the value, the more powerful the motor and consequently the less motor speed varies with load variations. It is based on the quotient of ideal no load speed and ideal stall torque.

Line 15 Mechanical time constant τ_m [ms]
is the time required for the rotor to accelerate from standstill to 63% of its no load speed.

Line 16 Rotor inertia J_R [gcm²]
is the mass moment of inertia of the rotor, based on the axis of rotation.

Line 17 Thermal resistance housing-ambient R_{th2} [K/W]
and
Line 18 Thermal resistance winding-housing R_{th1} [K/W]
Characteristic values of thermal contact resistance without additional heat sinking. Lines 17 and 18 combined define the maximum heating at a given power loss (load). Thermal resistance R_{th2} on motors with metal flanges can decrease by up to 80% if the motor is coupled directly to a good heat-conducting (e.g. metallic) mounting rather than a plastic panel.

Line 19 Thermal time constant winding τ_w [s]
and
Line 20 Thermal time constant motor τ_s [s]
These are the typical reaction times for a temperature change of winding and motor. It can be seen that the motor reacts much more sluggishly in thermal terms than the winding.The values are calculated from the product of thermal capacity and given heat resistances.

Line 21 Ambient temperature [°C]
Operating temperature range. This derives from the heat reliability of the materials used and viscosity of bearing lubrication.

Line 22 Max. winding temperature [°C]
Maximum permissible winding temperature.

Line 23 Maximum permissible speed n_{max} [rpm]
is the maximum recommended speed based on thermal and mechanical perspectives. A reduced service life can be expected at higher speeds.

Line 24 Axial play [mm]
For non-preloaded motors, this represents the tolerance limits of the factory-set bearing play. The latter is included in shaft length tolerances. Pre-loading cancels out axial play up to the given axial loading.

Line 25 Radial play [mm]
Radial play derives from the bearings' radial air. A spring (bearing preload) cancels out radial play up to the given axial loading.

Line 26 / 27 Max. axial loading [N]
Dynamically: axial loading permissible in operation. If different values apply for traction and thrust, the smaller value is given.
Statically: maximum axial force applying to the shaft at standstill where no residual damage occurs.
Shaft supported: maximum axial force applying to the shaft at standstill if the force is not input at the other shaft end.This is not possible for motors with only one shaft end.

Line 28 Max. radial loading [N]
The value is given for a typical clearance from the flange; this value falls the greater the clearance.

Line 29 Number of pole pairs
Number of north poles of the permanent magnet. The phase streams and commutation signals pass through per revolution p cycles. Servo-controllers require the correct details of the number of pole pairs.

Line 30 Number of commutator segments

Line 31 Weight of motor [g]

RE 6 ∅6 mm, Precious Metal Brushes, 0.3 Watt

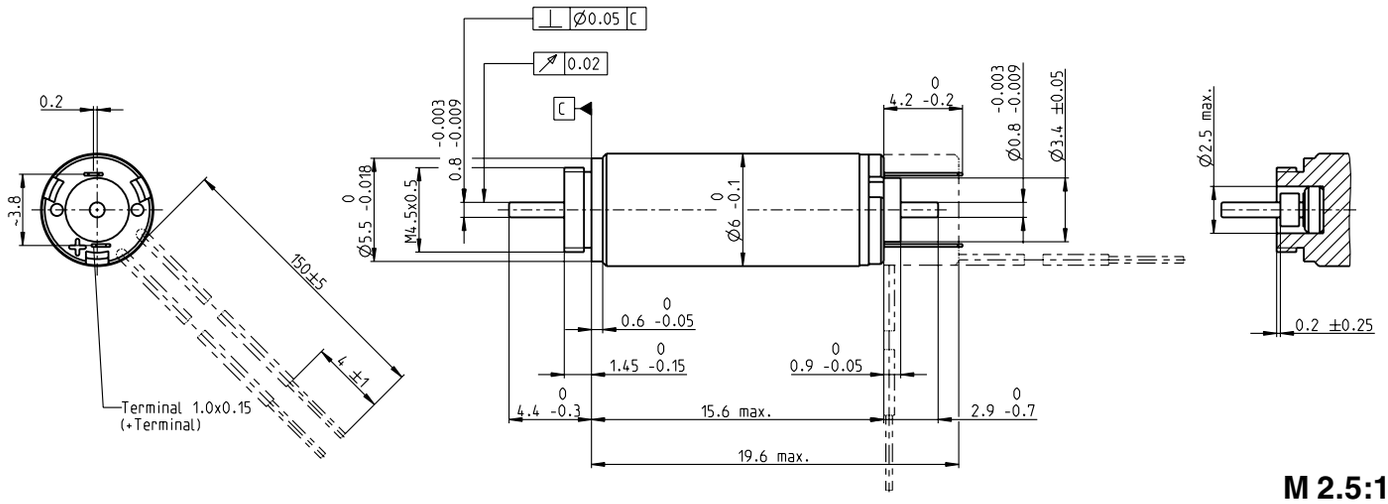

M 2.5:1

Stock program
Standard program
Special program (on request)

Part Numbers

B with cables	386780	386781	**386782**	386783
A with terminals	349189	349190	**349191**	349192

Motor Data

	Values at nominal voltage					
1	Nominal voltage	V	1.5	3	4.5	6
2	No load speed	rpm	18500	18600	18600	18600
3	No load current	mA	42.6	21.3	14.2	10.7
4	Nominal speed	rpm	4680	5670	5400	5340
5	Nominal torque (max. continuous torque)	mNm	0.302	0.324	0.318	0.316
6	Nominal current (max. continuous current)	A	0.453	0.242	0.158	0.118
7	Stall torque	mNm	0.419	0.485	0.469	0.465
8	Starting current	A	0.581	0.336	0.217	0.161
9	Max. efficiency	%	54	57	56	56
	Characteristics					
10	Terminal resistance	Ω	2.58	8.92	20.8	37.2
11	Terminal inductance	mH	0.0227	0.0907	0.204	0.363
12	Torque constant	mNm/A	0.72	1.44	2.16	2.88
13	Speed constant	rpm/V	13300	6630	4420	3310
14	Speed / torque gradient	rpm/mNm	47500	41000	42400	42700
15	Mechanical time constant	ms	7.45	7.18	7.24	7.24
16	Rotor inertia	gcm²	0.015	0.0167	0.0163	0.0162

Specifications

	Thermal data	
17	Thermal resistance housing-ambient	77 K/W
18	Thermal resistance winding-housing	16.2 K/W
19	Thermal time constant winding	1.39 s
20	Thermal time constant motor	16.3 s
21	Ambient temperature	-20…+65°C
22	Max. permissible winding temperature	+85°C
	Mechanical data (sleeve bearings)	
23	Max. permissible speed	23000 rpm
24	Axial play	0.02 - 0.1 mm
25	Radial play	0.012 mm
26	Max. axial load (dynamic)	0.15 N
27	Max. force for press fits (static)	10 N
28	Max. radial loading, 4 mm from flange	0.6 N
	Other specifications	
29	Number of pole pairs	1
30	Number of commutator segments	5
31	Weight of motor	2.3 g

Values listed in the table are nominal.
Explanation of the figures on page 79.

Operating Range

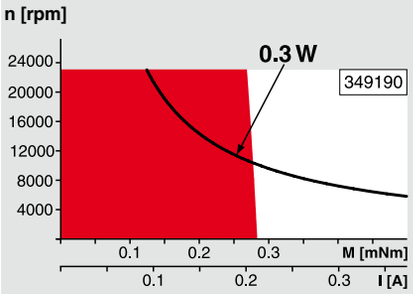

Comments

Continuous operation
In observation of above listed thermal resistance (lines 17 and 18) the maximum permissible winding temperature will be reached during continuous operation at 25°C ambient.
= Thermal limit.

Short term operation
The motor may be briefly overloaded (recurring).

Assigned power rating

maxon Modular System

Overview on page 20–25

Planetary Gearhead
∅6 mm
0.002 - 0.03 Nm
Page 242

Spindle Drive
∅6 mm
Page 293

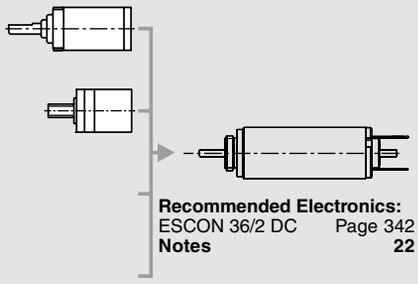

Recommended Electronics:
ESCON 36/2 DC Page 342
Notes **22**

RE 8 ∅8 mm, Precious Metal Brushes, 0.5 Watt

NEW

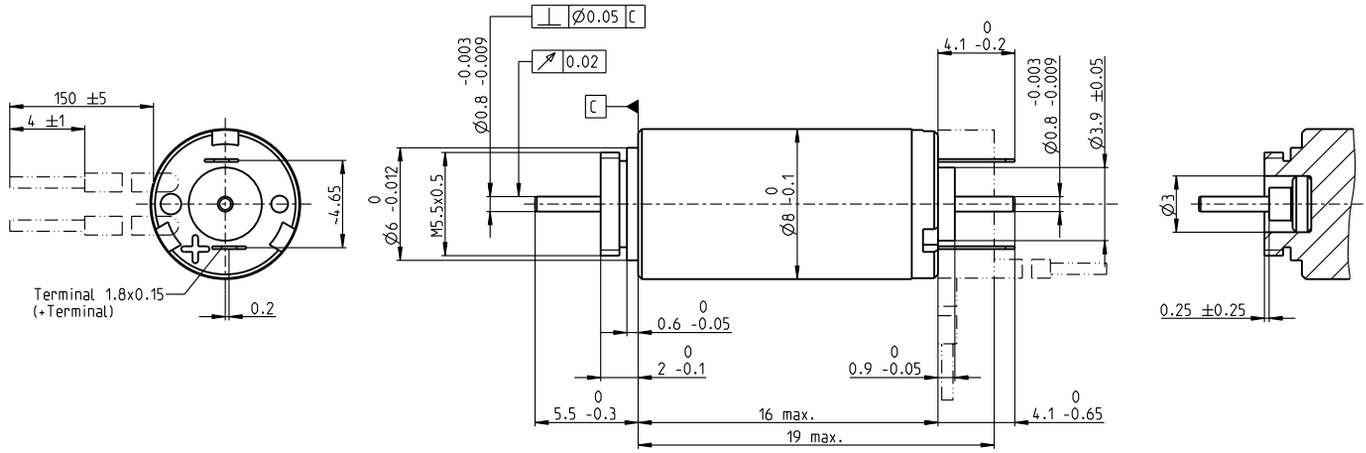

M 2.5:1

Stock program
Standard program
Special program (on request)

Part Numbers

B with cables	462207	463219	**463220**	463221	463222	**463223**	
A with terminals	347723	347724	**347725**	347728	347726	**347727**	
Motor Data							
Values at nominal voltage							
1 Nominal voltage V	2.4	4.2	6	7.2	9	12	
2 No load speed rpm	13900	14200	13300	14300	14400	15600	
3 No load current mA	19.2	11.2	7.3	6.66	5.35	4.44	
4 Nominal speed rpm	4320	4480	3500	4220	4760	5410	
5 Nominal torque (max. continuous torque) mNm	0.63	0.624	0.616	0.596	0.626	0.589	
6 Nominal current (max. continuous current) A	0.412	0.237	0.155	0.134	0.113	0.0865	
7 Stall torque mNm	0.925	0.932	0.857	0.866	0.957	0.925	
8 Starting current A	0.581	0.34	0.207	0.187	0.166	0.13	
9 Max. efficiency %	67	67	66	66	68	67	
Characteristics							
10 Terminal resistance Ω	4.13	12.3	29	38.5	54.3	92.2	
11 Terminal inductance mH	0.0304	0.09	0.206	0.257	0.4	0.606	
12 Torque constant mNm/A	1.59	2.74	4.15	4.63	5.77	7.11	
13 Speed constant rpm/V	6000	3490	2300	2060	1650	1340	
14 Speed / torque gradient rpm/mNm	15600	15700	16100	17200	15500	17400	
15 Mechanical time constant ms	6.31	6.3	6.34	6.44	6.29	6.49	
16 Rotor inertia gcm^2	0.0388	0.0383	0.0375	0.0358	0.0387	0.0355	

Specifications

Thermal data

17	Thermal resistance housing-ambient	48 K/W
18	Thermal resistance winding-housing	22 K/W
19	Thermal time constant winding	2.96 s
20	Thermal time constant motor	21.3 s
21	Ambient temperature	-20…+65°C
22	Max. permissible winding temperature	+85°C

Mechanical data (sleeve bearings)

23	Max. permissible speed	23000 rpm
24	Axial play	0.02 - 0.1 mm
25	Radial play	0.012 mm
26	Max. axial load (dynamic)	0.15 N
27	Max. force for press fits (static)	10 N
28	Max. radial loading, 4 mm from flange	0.6 N

Other specifications

29	Number of pole pairs	1
30	Number of commutator segments	5
31	Weight of motor	4.1 g

Values listed in the table are nominal.
Explanation of the figures on page 79.

Operating Range

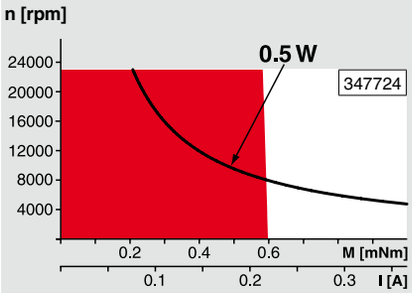

Comments

Continuous operation
In observation of above listed thermal resistance (lines 17 and 18) the maximum permissible winding temperature will be reached during continuous operation at 25°C ambient.
= Thermal limit.

Short term operation
The motor may be briefly overloaded (recurring).

Assigned power rating

maxon Modular System

Overview on page 20–25

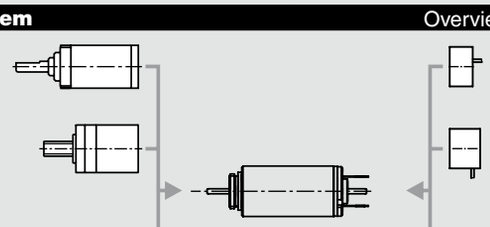

Planetary Gearhead
∅8 mm
0.01 - 0.1 Nm
Page 243

Spindle Drive
∅8 mm
Page 294–295

for type A:
Encoder MR
100 CPT, 2 channels
Page 313

for type A:
Encoder 8 OPT
50 CPT, 2 channels
Page 321

Recommended Electronics:

ESCON 36/2 DC	Page 342
EPOS2 24/2	350
EPOS2 Module 36/2	350
Notes	**22**

RE 10 ∅10 mm, Precious Metal Brushes, 0.75 Watt

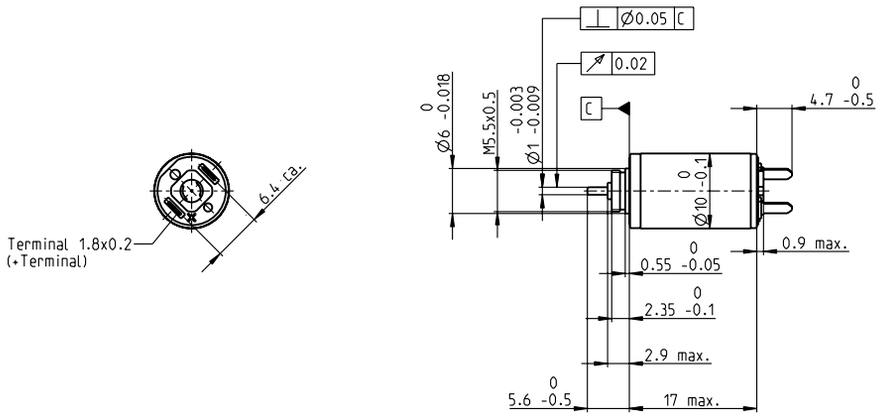

M 1:1

Stock program
Standard program
Special program (on request)

Part Numbers

			118382	118383	118384	118385	118386	118387	118388	118389	118390	118391
Motor Data												
	Values at nominal voltage											
1	Nominal voltage	V	2.4	3	3.6	4.5	6	6	7.2	7.2	9	12
2	No load speed	rpm	10300	10400	9930	11300	13000	11400	11700	10600	10700	11600
3	No load current	mA	16	12.8	10.1	9.52	8.51	7.18	6.22	5.47	4.45	3.68
4	Nominal speed	rpm	1670	2010	1520	2970	4680	3160	3350	1860	2000	2790
5	Nominal torque (max. continuous torque)	mNm	0.76	0.792	0.786	0.788	0.785	0.801	0.784	0.758	0.757	0.746
6	Nominal current (max. continuous current)	A	0.368	0.307	0.243	0.222	0.191	0.17	0.143	0.125	0.101	0.0811
7	Stall torque	mNm	0.924	1	0.949	1.09	1.25	1.13	1.12	0.944	0.957	1.01
8	Starting current	A	0.432	0.375	0.284	0.297	0.292	0.232	0.198	0.15	0.123	0.106
9	Max. efficiency	%	66	67	66	68	69	68	68	66	66	67
	Characteristics											
10	Terminal resistance	Ω	5.55	8	12.7	15.2	20.6	25.8	36.4	47.9	72.9	114
11	Terminal inductance	mH	0.0461	0.072	0.112	0.136	0.184	0.24	0.325	0.398	0.605	0.92
12	Torque constant	mNm/A	2.14	2.67	3.34	3.67	4.27	4.87	5.68	6.28	7.75	9.55
13	Speed constant	rpm/V	4470	3570	2860	2600	2230	1960	1680	1520	1230	1000
14	Speed / torque gradient	rpm/mNm	11600	10700	10800	10700	10700	10400	10800	11600	11600	11900
15	Mechanical time constant	ms	8.02	7.96	7.99	7.95	7.95	7.9	7.98	8.09	8.09	8.16
16	Rotor inertia	gcm²	0.066	0.0711	0.0704	0.0706	0.0706	0.0726	0.0706	0.0666	0.0666	0.0654

Specifications

	Thermal data	
17	Thermal resistance housing-ambient	45.5 K/W
18	Thermal resistance winding-housing	19.5 K/W
19	Thermal time constant winding	3.16 s
20	Thermal time constant motor	108 s
21	Ambient temperature	-20…+65°C
22	Max. permissible winding temperature	+85°C
	Mechanical data (sleeve bearings)	
23	Max. permissible speed	19000 rpm
24	Axial play	0.05 - 0.15 mm
25	Radial play	0.012 mm
26	Max. axial load (dynamic)	0.15 N
27	Max. force for press fits (static)	15 N
28	Max. radial loading, 4 mm from flange	0.4 N
	Other specifications	
29	Number of pole pairs	1
30	Number of commutator segments	7
31	Weight of motor	7 g

Values listed in the table are nominal.
Explanation of the figures on page 79.

Operating Range

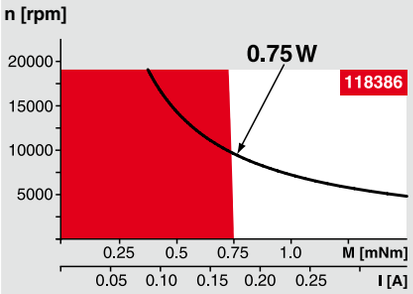

Comments

Continuous operation
In observation of above listed thermal resistance (lines 17 and 18) the maximum permissible winding temperature will be reached during continuous operation at 25°C ambient.
= Thermal limit.

Short term operation
The motor may be briefly overloaded (recurring).

Assigned power rating

maxon Modular System

Overview on page 20–25

Planetary Gearhead
∅10 mm
0.005 - 0.1 Nm
Page 244

Planetary Gearhead
∅10 mm
0.01 - 0.15 Nm
Page 245

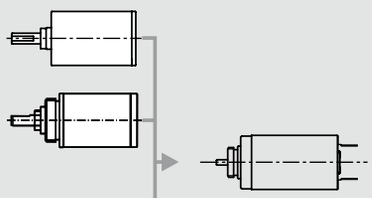

Recommended Electronics:
ESCON 36/2 DC Page 342
Notes **22**

RE 10 ∅10 mm, Precious Metal Brushes, 0.75 Watt

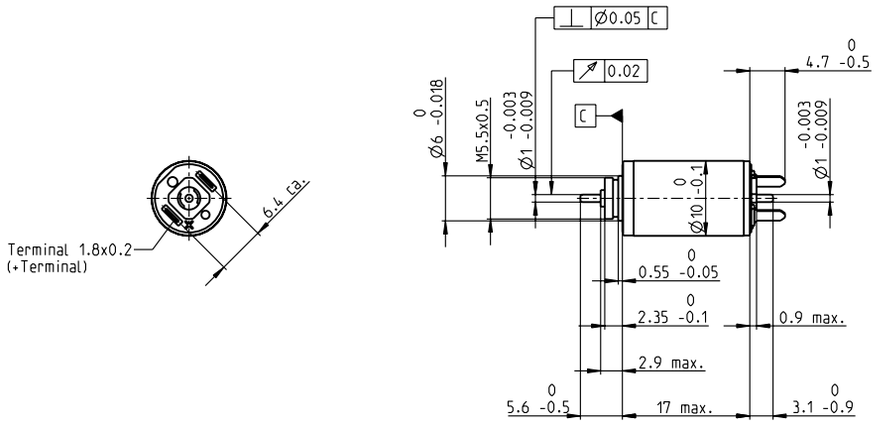

M 1:1

Stock program
Standard program
Special program (on request)

Part Numbers

Motor Data		256085	256086	256087	256088	256089	256090	256091	256092	256093	256094
Values at nominal voltage											
1 Nominal voltage	V	2.4	3	3.6	4.5	6	6	7.2	7.2	9	12
2 No load speed	rpm	10100	10200	9760	11200	12800	11200	11600	10400	10500	11400
3 No load current	mA	23.4	18.8	14.9	13.9	12.3	10.5	9.07	8.01	6.51	5.37
4 Nominal speed	rpm	1670	2010	1520	2970	4690	3170	3350	1860	2000	2790
5 Nominal torque (max. continuous torque)	mNm	0.746	0.777	0.771	0.773	0.769	0.786	0.769	0.743	0.743	0.731
6 Nominal current (max. continuous current)	A	0.368	0.307	0.243	0.222	0.19	0.17	0.143	0.125	0.101	0.081
7 Stall torque	mNm	0.924	1	0.949	1.09	1.25	1.13	1.12	0.944	0.957	1.01
8 Starting current	A	0.432	0.375	0.284	0.297	0.292	0.232	0.198	0.15	0.123	0.106
9 Max. efficiency	%	59	61	60	62	64	62	62	60	60	60
Characteristics											
10 Terminal resistance	Ω	5.55	8	12.7	15.2	20.6	25.8	36.4	47.9	72.9	114
11 Terminal inductance	mH	0.0461	0.072	0.112	0.136	0.184	0.24	0.325	0.398	0.605	0.92
12 Torque constant	mNm/A	2.14	2.67	3.34	3.67	4.27	4.87	5.68	6.28	7.75	9.55
13 Speed constant	rpm/V	4470	3570	2860	2600	2230	1960	1680	1520	1230	1000
14 Speed / torque gradient	rpm/mNm	11600	10700	10800	10700	10700	10400	10800	11600	11600	11900
15 Mechanical time constant	ms	8.02	7.96	7.99	7.95	7.95	7.9	7.98	8.09	8.09	8.16
16 Rotor inertia	gcm²	0.066	0.0711	0.0704	0.0706	0.0706	0.0726	0.0706	0.0666	0.0666	0.0654

Specifications

	Thermal data	
17	Thermal resistance housing-ambient	45.5 K/W
18	Thermal resistance winding-housing	19.5 K/W
19	Thermal time constant winding	3.16 s
20	Thermal time constant motor	108 s
21	Ambient temperature	-20…+65°C
22	Max. permissible winding temperature	+85°C
	Mechanical data (sleeve bearings)	
23	Max. permissible speed	14000 rpm
24	Axial play	0.05 - 0.15 mm
25	Radial play	0.012 mm
26	Max. axial load (dynamic)	0.15 N
27	Max. force for press fits (static)	15 N
28	Max. radial loading, 4 mm from flange	0.4 N
	Other specifications	
29	Number of pole pairs	1
30	Number of commutator segments	7
31	Weight of motor	7 g

Values listed in the table are nominal.
Explanation of the figures on page 79.

Operating Range

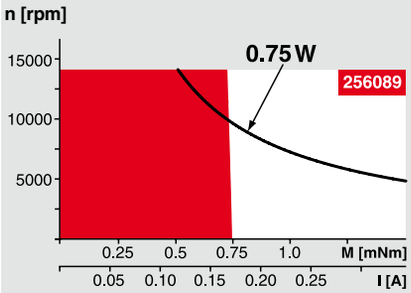

Comments

Continuous operation
In observation of above listed thermal resistance (lines 17 and 18) the maximum permissible winding temperature will be reached during continuous operation at 25°C ambient.
= Thermal limit.

Short term operation
The motor may be briefly overloaded (recurring).

Assigned power rating

maxon Modular System

Overview on page 20–25

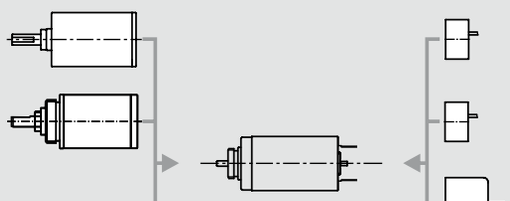

Planetary Gearhead
∅10 mm
0.005 - 0.1 Nm
Page 244

Planetary Gearhead
∅10 mm
0.01 - 0.15 Nm
Page 245

Encoder MR
16 CPT,
2 channels
Page 312

Encoder MR
64 - 256 CPT,
2 channels
Page 313

Encoder MEnc
∅10 mm
12 CPT, 2 channels
Page 333

Recommended Electronics:

ESCON 36/2 DC	Page 342
EPOS2 24/2	350
EPOS2 Module 36/2	350
Notes	**22**

RE 10 ∅10 mm, Precious Metal Brushes, 1.5 Watt

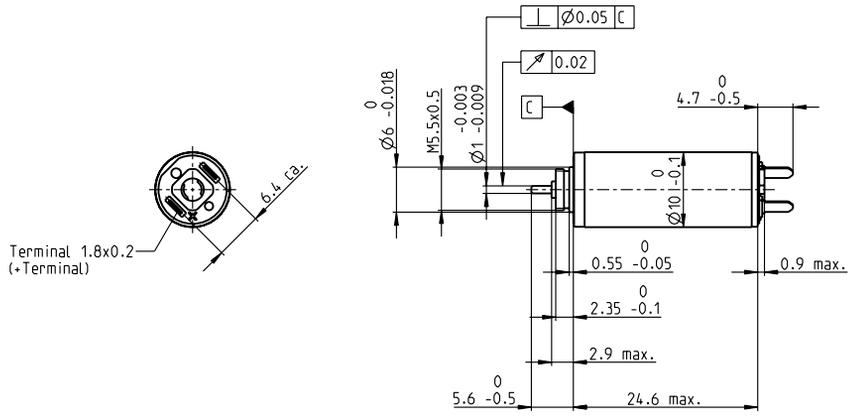

M 1:1

Stock program
Standard program
Special program (on request)

Part Numbers

			118392	118393	118394	118395	118396	118397	118398	118399	118400
Motor Data											
	Values at nominal voltage										
1	Nominal voltage	V	3	3	4.5	4.5	6	6	9	9	12
2	No load speed	rpm	13000	10700	12800	10600	12400	9880	12200	11100	12500
3	No load current	mA	23.9	18.5	15.5	12.1	11.1	8.33	7.27	6.42	5.67
4	Nominal speed	rpm	6840	4430	6530	4210	6160	3880	6080	4990	6510
5	Nominal torque (max. continuous torque)	mNm	1.5	1.49	1.48	1.47	1.5	1.57	1.53	1.54	1.54
6	Nominal current (max. continuous current)	A	0.713	0.582	0.462	0.379	0.338	0.282	0.226	0.207	0.176
7	Stall torque	mNm	3.12	2.52	3.04	2.47	3.01	2.61	3.08	2.83	3.24
8	Starting current	A	1.44	0.963	0.919	0.619	0.66	0.458	0.444	0.371	0.36
9	Max. efficiency	%	76	75	76	74	76	75	76	76	77
	Characteristics										
10	Terminal resistance	Ω	2.08	3.11	4.9	7.27	9.09	13.1	20.3	24.3	33.3
11	Terminal inductance	mH	0.0173	0.0253	0.0402	0.0586	0.0766	0.12	0.178	0.215	0.299
12	Torque constant	mNm/A	2.16	2.62	3.3	3.99	4.56	5.7	6.95	7.63	9
13	Speed constant	rpm/V	4410	3640	2890	2400	2100	1680	1370	1250	1060
14	Speed / torque gradient	rpm/mNm	4240	4330	4280	4370	4180	3860	4010	3980	3930
15	Mechanical time constant	ms	4.62	4.61	4.6	4.59	4.58	4.56	4.59	4.56	4.56
16	Rotor inertia	gcm²	0.104	0.102	0.102	0.1	0.105	0.113	0.109	0.11	0.111

Specifications

	Thermal data	
17	Thermal resistance housing-ambient	37.5 K/W
18	Thermal resistance winding-housing	9.0 K/W
19	Thermal time constant winding	2.22 s
20	Thermal time constant motor	135 s
21	Ambient temperature	-20…+65°C
22	Max. permissible winding temperature	+85°C
	Mechanical data (sleeve bearings)	
23	Max. permissible speed	19000 rpm
24	Axial play	0.05 - 0.15 mm
25	Radial play	0.012 mm
26	Max. axial load (dynamic)	0.15 N
27	Max. force for press fits (static)	15 N
28	Max. radial loading, 4 mm from flange	0.4 N
	Other specifications	
29	Number of pole pairs	1
30	Number of commutator segments	7
31	Weight of motor	10 g

Values listed in the table are nominal.
Explanation of the figures on page 79.

Operating Range

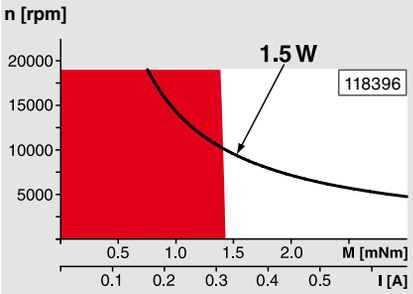

Comments

Continuous operation
In observation of above listed thermal resistance (lines 17 and 18) the maximum permissible winding temperature will be reached during continuous operation at 25°C ambient.
= Thermal limit.

Short term operation
The motor may be briefly overloaded (recurring).

Assigned power rating

maxon Modular System

Overview on page 20–25

Planetary Gearhead
∅10 mm
0.005 - 0.1 Nm
Page 244

Planetary Gearhead
∅10 mm
0.01 - 0.15 Nm
Page 245

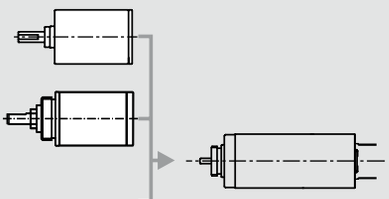

Recommended Electronics:
ESCON 36/2 DC Page 342
Notes **22**

RE 10 ∅10 mm, Precious Metal Brushes, 1.5 Watt

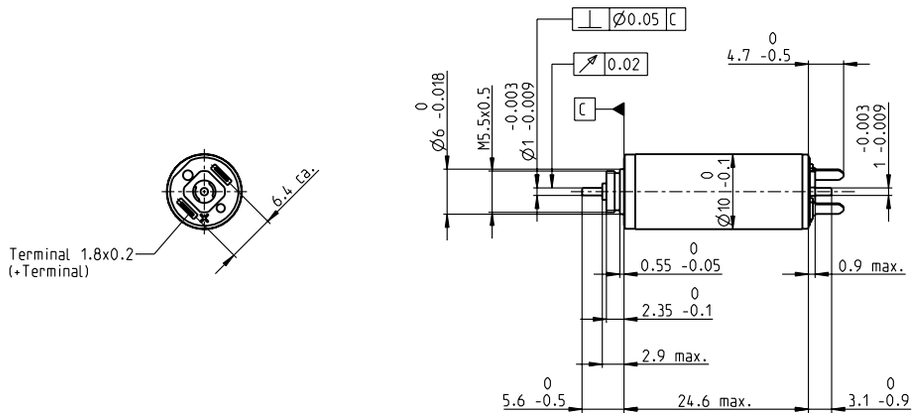

M 1:1

Stock program
Standard program
Special program (on request)

Part Numbers

Motor Data		256096	256097	256099	256100	256101	256102	256103	256104	256105
Values at nominal voltage										
1 Nominal voltage	V	2.4	2.4	4.5	4.5	6	7.2	9	10	12
2 No load speed	rpm	10400	8560	12800	10600	12400	11900	12200	12300	12500
3 No load current	mA	21.7	17	15.1	11.8	10.8	8.55	7.06	6.45	5.5
4 Nominal speed	rpm	4170	2230	6530	4210	6160	5900	6080	6250	6510
5 Nominal torque (max. continuous torque)	mNm	1.51	1.49	1.48	1.47	1.5	1.56	1.53	1.54	1.55
6 Nominal current (max. continuous current)	A	0.715	0.584	0.462	0.379	0.339	0.282	0.226	0.207	0.176
7 Stall torque	mNm	2.49	2.02	3.04	2.47	3.01	3.13	3.08	3.14	3.24
8 Starting current	A	1.15	0.771	0.919	0.619	0.66	0.549	0.444	0.412	0.36
9 Max. efficiency	%	75	73	76	75	76	77	77	77	77
Characteristics										
10 Terminal resistance	Ω	2.08	3.11	4.9	7.27	9.09	13.1	20.3	24.3	33.3
11 Terminal inductance	mH	0.0173	0.0253	0.0402	0.0586	0.0766	0.12	0.178	0.215	0.299
12 Torque constant	mNm/A	2.16	2.62	3.3	3.99	4.56	5.7	6.95	7.63	9
13 Speed constant	rpm/V	4410	3640	2890	2400	2100	1680	1370	1250	1060
14 Speed / torque gradient	rpm/mNm	4240	4330	4280	4370	4180	3860	4010	3980	3930
15 Mechanical time constant	ms	4.62	4.61	4.6	4.59	4.58	4.56	4.59	4.56	4.56
16 Rotor inertia	gcm²	0.104	0.102	0.102	0.1	0.105	0.113	0.109	0.11	0.111

Specifications

	Thermal data	
17	Thermal resistance housing-ambient	37.5 K/W
18	Thermal resistance winding-housing	9.0 K/W
19	Thermal time constant winding	2.22 s
20	Thermal time constant motor	135 s
21	Ambient temperature	-20…+65°C
22	Max. permissible winding temperature	+85°C
	Mechanical data (sleeve bearings)	
23	Max. permissible speed	14000 rpm
24	Axial play	0.05 - 0.15 mm
25	Radial play	0.012 mm
26	Max. axial load (dynamic)	0.15 N
27	Max. force for press fits (static)	15 N
28	Max. radial loading, 4 mm from flange	0.4 N
	Other specifications	
29	Number of pole pairs	1
30	Number of commutator segments	7
31	Weight of motor	10 g

Values listed in the table are nominal.
Explanation of the figures on page 79.

Operating Range

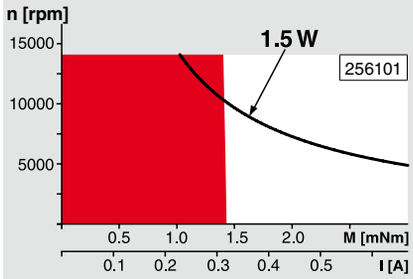

Comments

Continuous operation
In observation of above listed thermal resistance (lines 17 and 18) the maximum permissible winding temperature will be reached during continuous operation at 25°C ambient.
= Thermal limit.

Short term operation
The motor may be briefly overloaded (recurring).

Assigned power rating

maxon Modular System

Overview on page 20–25

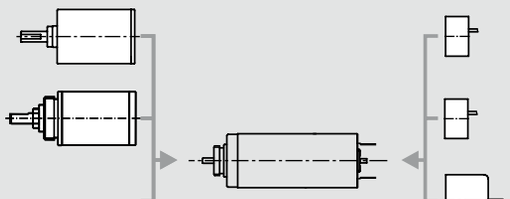

Planetary Gearhead
∅10 mm
0.005 - 0.1 Nm
Page 244

Planetary Gearhead
∅10 mm
0.01 - 0.15 Nm
Page 245

Encoder MR
16 CPT,
2 channels
Page 312

Encoder MR
64 - 256 CPT,
2 channels
Page 313

Encoder MEnc
∅10 mm
12 CPT, 2 channels
Page 333

Recommended Electronics:

ESCON 36/2 DC	Page 342
EPOS2 24/2	350
EPOS2 Module 36/2	350
Notes	**22**

RE 13 ∅13 mm, Precious Metal Brushes, 1.2 Watt

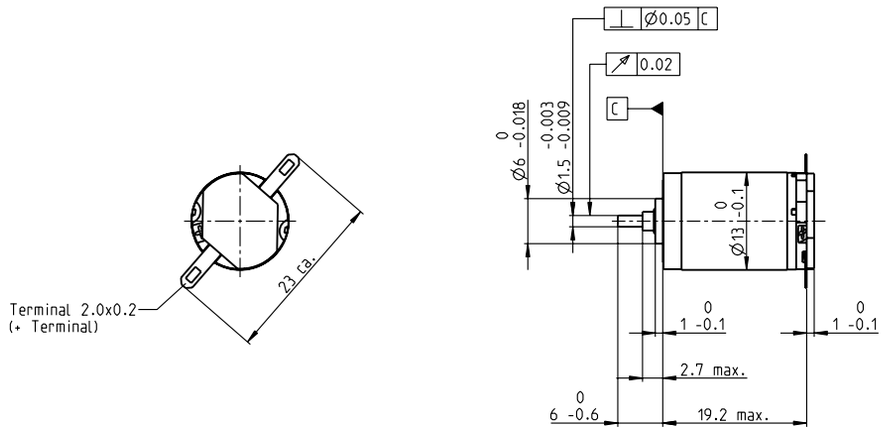

M 1:1

Stock program
Standard program
Special program (on request)

Part Numbers

			118401	118402	118403	118404	118405	118406	118407	118408	118409	118410	118411	118412	118413	118414	118415
Motor Data																	
	Values at nominal voltage																
1	Nominal voltage	V	1	1.2	1.5	1.8	2.4	3	3.6	4.2	5	6	8	9	10	12	15
2	No load speed	rpm	11600	11300	11100	11000	11300	11600	12100	11500	11300	10900	11700	10600	11000	11200	10700
3	No load current	mA	104	84.1	65.7	53.8	42	34.5	30.6	24.5	20.1	16	13.2	10.3	9.75	8.31	6.2
4	Nominal speed	rpm	9930	8600	7670	6520	5860	6250	6960	6310	6010	5650	6400	5210	5590	5820	5190
5	Nominal torque (max. continuous torque)	mNm	0.499	0.63	0.825	1.02	1.24	1.27	1.31	1.3	1.28	1.28	1.27	1.26	1.24	1.25	1.24
6	Nominal current (max. continuous current)	A	0.72	0.72	0.72	0.72	0.666	0.557	0.499	0.405	0.329	0.266	0.211	0.169	0.156	0.133	0.101
7	Stall torque	mNm	2.86	2.4	2.52	2.45	2.54	2.76	3.08	2.9	2.76	2.69	2.84	2.52	2.57	2.65	2.48
8	Starting current	A	3.56	2.45	2.02	1.62	1.3	1.15	1.11	0.857	0.674	0.53	0.449	0.321	0.307	0.268	0.19
9	Max. efficiency	%	69	67	68	67	68	69	70	70	69	69	69	68	68	68	68
	Characteristics																
10	Terminal resistance	Ω	0.281	0.491	0.742	1.11	1.85	2.61	3.23	4.9	7.42	11.3	17.8	28	32.6	44.9	78.8
11	Terminal inductance	mH	0.0061	0.0091	0.0147	0.0216	0.0362	0.0545	0.0719	0.108	0.158	0.243	0.377	0.579	0.661	0.921	1.59
12	Torque constant	mNm/A	0.802	0.98	1.25	1.51	1.96	2.41	2.76	3.39	4.1	5.08	6.32	7.84	8.37	9.89	13
13	Speed constant	rpm/V	11900	9740	7660	6310	4870	3970	3460	2820	2330	1880	1510	1220	1140	966	734
14	Speed / torque gradient	rpm/mNm	4170	4880	4560	4640	4600	4310	4040	4090	4220	4190	4250	4350	4440	4380	4450
15	Mechanical time constant	ms	15.6	14.9	14.3	14.1	13.9	13.7	13.5	13.5	13.5	13.5	13.6	13.7	13.6	13.6	13.7
16	Rotor inertia	gcm^2	0.358	0.291	0.299	0.29	0.288	0.303	0.318	0.315	0.306	0.308	0.304	0.3	0.293	0.297	0.294

Specifications

	Thermal data	
17	Thermal resistance housing-ambient	46 K/W
18	Thermal resistance winding-housing	14 K/W
19	Thermal time constant winding	5.18 s
20	Thermal time constant motor	76.1 s
21	Ambient temperature	-20…+65°C
22	Max. permissible winding temperature	+85°C
	Mechanical data (sleeve bearings)	
23	Max. permissible speed	19000 rpm
24	Axial play	0.05 - 0.15 mm
25	Radial play	0.014 mm
26	Max. axial load (dynamic)	0.8 N
27	Max. force for press fits (static)	15 N
28	Max. radial loading, 5 mm from flange	1.4 N
	Other specifications	
29	Number of pole pairs	1
30	Number of commutator segments	7
31	Weight of motor	12 g

Values listed in the table are nominal.
Explanation of the figures on page 79.

Operating Range

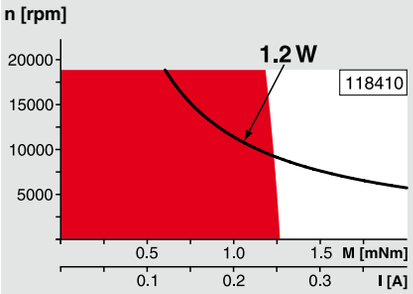

Comments

Continuous operation
In observation of above listed thermal resistance (lines 17 and 18) the maximum permissible winding temperature will be reached during continuous operation at 25°C ambient.
= Thermal limit.

Short term operation
The motor may be briefly overloaded (recurring).

Assigned power rating

maxon Modular System

Overview on page 20–25

Recommended Electronics:

ESCON 36/2 DC	Page 342
ESCON Module 50/5	343
ESCON 50/5	344
Notes	**22**

RE 13 ∅13 mm, Precious Metal Brushes, 1.2 Watt

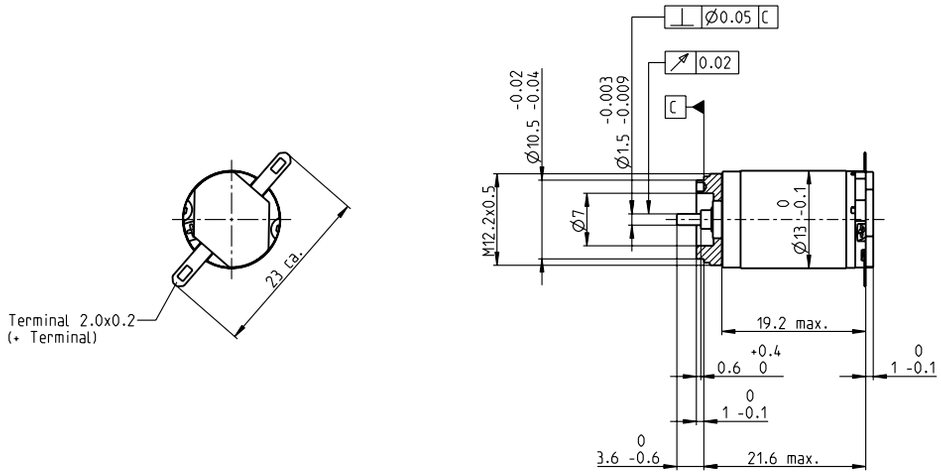

M 1:1

Stock program
Standard program
Special program (on request)

Part Numbers

		118416	118417	118418	118419	118420	118421	118422	118423	118424	118425	118426	118427	118428	118429	118430
Motor Data																
Values at nominal voltage																
1 Nominal voltage	V	1	1.2	1.5	1.8	2.4	3	3.6	4.2	5	6	8	9	10	12	15
2 No load speed	rpm	11600	11300	11100	11000	11300	11600	12100	11500	11300	10900	11700	10600	11000	11200	10700
3 No load current	mA	104	84.1	65.7	53.8	42	34.5	30.6	24.5	20.1	16	13.2	10.3	9.75	8.31	6.2
4 Nominal speed	rpm	9930	8600	7670	6520	5860	6250	6960	6310	6010	5650	6400	5210	5590	5820	5190
5 Nominal torque (max. continuous torque)	mNm	0.499	0.63	0.825	1.02	1.24	1.27	1.31	1.3	1.28	1.28	1.27	1.26	1.24	1.25	1.24
6 Nominal current (max. continuous current)	A	0.72	0.72	0.72	0.72	0.666	0.557	0.499	0.405	0.329	0.266	0.211	0.169	0.156	0.133	0.101
7 Stall torque	mNm	2.86	2.4	2.52	2.45	2.54	2.76	3.08	2.9	2.76	2.69	2.84	2.52	2.57	2.65	2.48
8 Starting current	A	3.56	2.45	2.02	1.62	1.3	1.15	1.11	0.857	0.674	0.53	0.449	0.321	0.307	0.268	0.19
9 Max. efficiency	%	69	67	68	67	68	69	70	70	69	69	69	68	68	68	68
Characteristics																
10 Terminal resistance	Ω	0.281	0.491	0.742	1.11	1.85	2.61	3.23	4.9	7.42	11.3	17.8	28	32.6	44.9	78.8
11 Terminal inductance	mH	0.0061	0.0091	0.0147	0.0216	0.0362	0.0545	0.0719	0.108	0.158	0.243	0.377	0.579	0.661	0.921	1.59
12 Torque constant	mNm/A	0.802	0.98	1.25	1.51	1.96	2.41	2.76	3.39	4.1	5.08	6.32	7.84	8.37	9.89	13
13 Speed constant	rpm/V	11900	9740	7660	6310	4870	3970	3460	2820	2330	1880	1510	1220	1140	966	734
14 Speed / torque gradient	rpm/mNm	4170	4880	4560	4640	4600	4310	4040	4090	4220	4190	4250	4350	4440	4380	4450
15 Mechanical time constant	ms	15.6	14.9	14.3	14.1	13.9	13.7	13.5	13.5	13.5	13.5	13.6	13.7	13.6	13.6	13.7
16 Rotor inertia	gcm^2	0.358	0.291	0.299	0.29	0.288	0.303	0.318	0.315	0.306	0.308	0.304	0.3	0.293	0.297	0.294

Specifications

Thermal data		
17	Thermal resistance housing-ambient	46 K/W
18	Thermal resistance winding-housing	14 K/W
19	Thermal time constant winding	5.18 s
20	Thermal time constant motor	76.1 s
21	Ambient temperature	-20…+65°C
22	Max. permissible winding temperature	+85°C
Mechanical data (sleeve bearings)		
23	Max. permissible speed	19000 rpm
24	Axial play	0.05 - 0.15 mm
25	Radial play	0.014 mm
26	Max. axial load (dynamic)	0.8 N
27	Max. force for press fits (static)	15 N
28	Max. radial loading, 5 mm from flange	1.4 N
Other specifications		
29	Number of pole pairs	1
30	Number of commutator segments	7
31	Weight of motor	15 g

Values listed in the table are nominal.
Explanation of the figures on page 79.

Operating Range

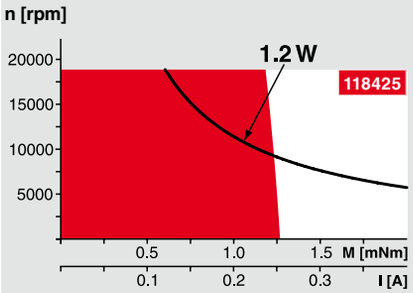

Comments

Continuous operation
In observation of above listed thermal resistance (lines 17 and 18) the maximum permissible winding temperature will be reached during continuous operation at 25°C ambient.
= Thermal limit.

Short term operation
The motor may be briefly overloaded (recurring).

Assigned power rating

maxon Modular System

Overview on page 20–25

Planetary Gearhead
∅13 mm
0.05 - 0.15 Nm
Page 247

Planetary Gearhead
∅13 mm
0.2 - 0.35 Nm
Page 248

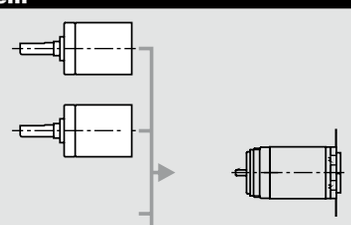

Recommended Electronics:

ESCON 36/2 DC	Page 342
ESCON Module 50/5	343
ESCON 50/5	344
Notes	**22**

RE 13 ∅13 mm, Precious Metal Brushes, 0.75 Watt

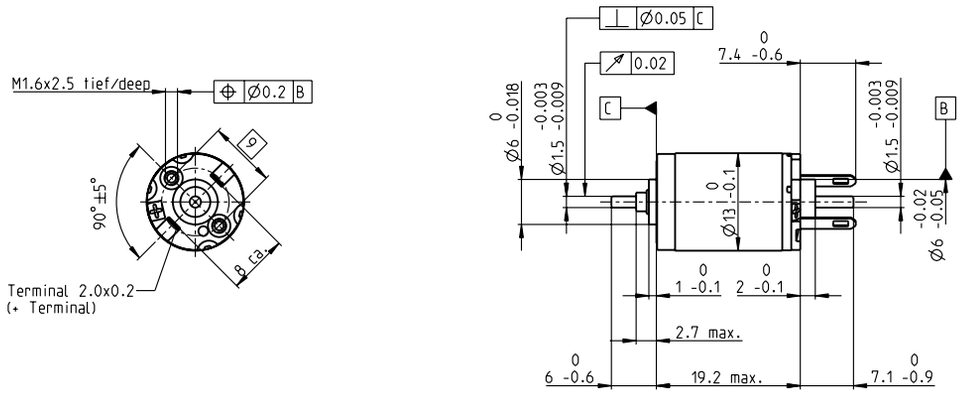

M 1:1

Stock program
Standard program
Special program (on request)

Part Numbers

			118431	118432	118433	118434	118435	118436	118437	118438	118439	118440	118441	118442	118443	118444	118445
Motor Data																	
	Values at nominal voltage																
1	Nominal voltage	V	0.6	0.72	0.9	1.2	1.5	1.8	1.8	2.4	3	3.6	4.8	6	6	7.2	10
2	No load speed	rpm	6900	6710	6590	7250	6990	6850	5950	6490	6700	6480	6950	7000	6530	6650	7030
3	No load current	mA	88.2	71.7	56.1	47.3	36.2	29.4	24.7	20.6	17.1	13.7	11.2	9.06	8.33	7.09	5.46
4	Nominal speed	rpm	5170	3920	3070	2740	1430	1430	682	1180	1300	1090	1520	1510	990	1140	1480
5	Nominal torque (max. continuous torque)	mNm	0.511	0.643	0.837	1.03	1.26	1.3	1.34	1.33	1.3	1.3	1.29	1.28	1.26	1.27	1.26
6	Nominal current (max. continuous current)	A	0.720	0.72	0.72	0.72	0.671	0.562	0.504	0.408	0.331	0.268	0.213	0.17	0.158	0.134	0.101
7	Stall torque	mNm	1.71	1.44	1.51	1.63	1.59	1.66	1.54	1.66	1.66	1.61	1.7	1.68	1.54	1.59	1.65
8	Starting current	A	2.14	1.47	1.21	1.08	0.812	0.69	0.557	0.489	0.404	0.318	0.269	0.214	0.184	0.161	0.127
9	Max. efficiency	%	64	61	62	63	63	63	63	64	64	63	64	64	62	63	63
	Characteristics																
10	Terminal resistance	Ω	0.281	0.491	0.742	1.11	1.85	2.61	3.23	4.9	7.42	11.3	17.8	28	32.6	44.9	78.8
11	Terminal inductance	mH	0.0061	0.0091	0.0147	0.0216	0.0362	0.0545	0.0719	0.108	0.158	0.243	0.377	0.579	0.661	0.921	1.59
12	Torque constant	mNm/A	0.802	0.98	1.25	1.51	1.96	2.41	2.76	3.39	4.1	5.08	6.32	7.84	8.37	9.89	13
13	Speed constant	rpm/V	11900	9740	7660	6310	4870	3970	3460	2820	2330	1880	1510	1220	1140	966	734
14	Speed / torque gradient	rpm/mNm	4170	4880	4560	4640	4600	4310	4040	4090	4220	4190	4250	4350	4440	4380	4450
15	Mechanical time constant	ms	15.6	14.9	14.3	14.1	13.9	13.7	13.5	13.5	13.5	13.5	13.6	13.7	13.6	13.6	13.7
16	Rotor inertia	gcm²	0.358	0.291	0.299	0.29	0.288	0.303	0.318	0.315	0.306	0.308	0.304	0.3	0.293	0.297	0.294

Specifications

	Thermal data	
17	Thermal resistance housing-ambient	46 K/W
18	Thermal resistance winding-housing	14 K/W
19	Thermal time constant winding	5.18 s
20	Thermal time constant motor	76.1 s
21	Ambient temperature	-20…+65°C
22	Max. permissible winding temperature	+85°C
	Mechanical data (sleeve bearings)	
23	Max. permissible speed	11000 rpm
24	Axial play	0.05 - 0.15 mm
25	Radial play	0.014 mm
26	Max. axial load (dynamic)	0.8 N
27	Max. force for press fits (static)	15 N
	(static, shaft supported)	170 N
28	Max. radial loading, 5 mm from flange	1.4 N
	Other specifications	
29	Number of pole pairs	1
30	Number of commutator segments	7
31	Weight of motor	12 g

Values listed in the table are nominal.
Explanation of the figures on page 79.

Operating Range

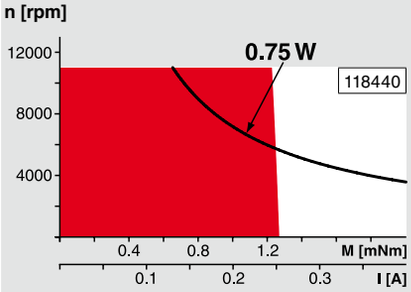

Comments

Continuous operation
In observation of above listed thermal resistance (lines 17 and 18) the maximum permissible winding temperature will be reached during continuous operation at 25°C ambient.
= Thermal limit.

Short term operation
The motor may be briefly overloaded (recurring).

Assigned power rating

maxon Modular System

Overview on page 20–25

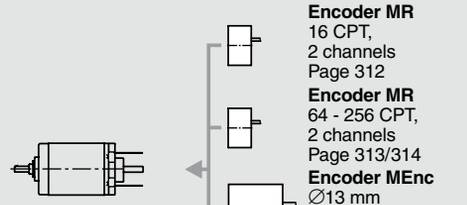

Encoder MR
16 CPT,
2 channels
Page 312

Encoder MR
64 - 256 CPT,
2 channels
Page 313/314

Encoder MEnc
∅13 mm
16 CPT, 2 channels
Page 334

Recommended Electronics:

ESCON 36/2 DC	Page 342
ESCON Module 50/5	343
ESCON 50/5	344
EPOS2 24/2	350
EPOS2 Module 36/2	350
EPOS3 70/10 EtherCAT	357
MAXPOS 50/5	360
Notes	**22**

RE 13 ∅13 mm, Precious Metal Brushes, 0.75 Watt

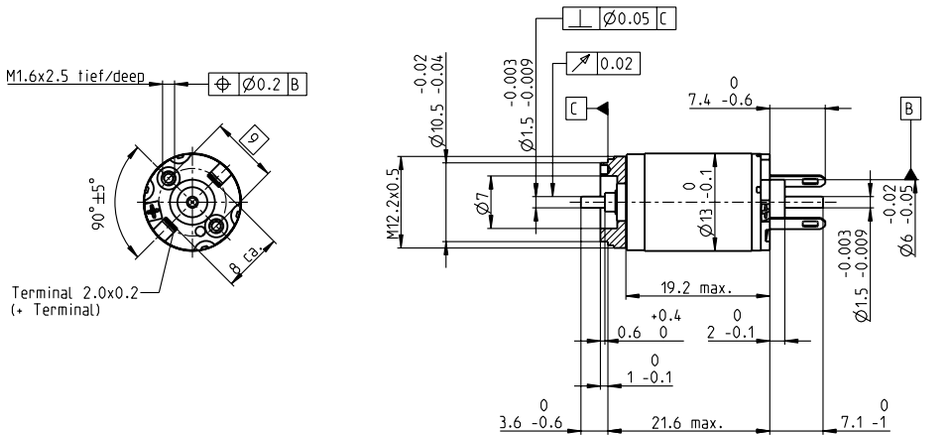

M 1:1

Stock program
Standard program
Special program (on request)

Part Numbers

Motor Data		118446	118447	118448	118449	118450	118451	118452	118453	118454	118455	118456	118457	118458	118459	118460
Values at nominal voltage																
1 Nominal voltage	V	0.6	0.72	0.9	1.2	1.5	1.8	1.8	2.4	3	3.6	4.8	6	6	7.2	10
2 No load speed	rpm	6900	6710	6590	7250	6990	6850	5950	6490	6700	6480	6950	7000	6530	6650	7030
3 No load current	mA	88.2	71.7	56.1	47.3	36.2	29.4	24.7	20.6	17.1	13.7	11.2	9.06	8.33	7.09	5.46
4 Nominal speed	rpm	5170	3920	3070	2740	1430	1430	682	1180	1300	1090	1520	1510	990	1140	1480
5 Nominal torque (max. continuous torque)	mNm	0.511	0.643	0.837	1.03	1.26	1.3	1.34	1.33	1.3	1.3	1.29	1.28	1.26	1.27	1.26
6 Nominal current (max. continuous current)	A	0.720	0.72	0.72	0.72	0.671	0.562	0.504	0.408	0.331	0.268	0.213	0.17	0.158	0.134	0.101
7 Stall torque	mNm	1.71	1.44	1.51	1.63	1.59	1.66	1.54	1.66	1.66	1.61	1.7	1.68	1.54	1.59	1.65
8 Starting current	A	2.14	1.47	1.21	1.08	0.812	0.69	0.557	0.489	0.404	0.318	0.269	0.214	0.184	0.161	0.127
9 Max. efficiency	%	64	61	62	63	63	63	63	64	64	63	64	64	62	63	63
Characteristics																
10 Terminal resistance	Ω	0.281	0.491	0.742	1.11	1.85	2.61	3.23	4.9	7.42	11.3	17.8	28	32.6	44.9	78.8
11 Terminal inductance	mH	0.0061	0.0091	0.0147	0.0216	0.0362	0.0545	0.0719	0.108	0.158	0.243	0.377	0.579	0.661	0.921	1.59
12 Torque constant	mNm/A	0.802	0.98	1.25	1.51	1.96	2.41	2.76	3.39	4.1	5.08	6.32	7.84	8.37	9.89	13
13 Speed constant	rpm/V	11900	9740	7660	6310	4870	3970	3460	2820	2330	1880	1510	1220	1140	966	734
14 Speed / torque gradient	rpm/mNm	4170	4880	4560	4640	4600	4310	4040	4090	4220	4190	4250	4350	4440	4380	4450
15 Mechanical time constant	ms	15.6	14.9	14.3	14.1	13.9	13.7	13.5	13.5	13.5	13.5	13.6	13.7	13.6	13.6	13.7
16 Rotor inertia	gcm^2	0.358	0.291	0.299	0.29	0.288	0.303	0.318	0.315	0.306	0.308	0.304	0.3	0.293	0.297	0.294

Specifications

	Thermal data	
17	Thermal resistance housing-ambient	46 K/W
18	Thermal resistance winding-housing	14 K/W
19	Thermal time constant winding	5.18 s
20	Thermal time constant motor	76.1 s
21	Ambient temperature	-20…+65°C
22	Max. permissible winding temperature	+85°C
	Mechanical data (sleeve bearings)	
23	Max. permissible speed	11 000 rpm
24	Axial play	0.05 - 0.15 mm
25	Radial play	0.014 mm
26	Max. axial load (dynamic)	0.8 N
27	Max. force for press fits (static)	15 N
	(static, shaft supported)	170 N
28	Max. radial loading, 5 mm from flange	1.4 N
	Other specifications	
29	Number of pole pairs	1
30	Number of commutator segments	7
31	Weight of motor	15 g

Values listed in the table are nominal.
Explanation of the figures on page 79.

Operating Range

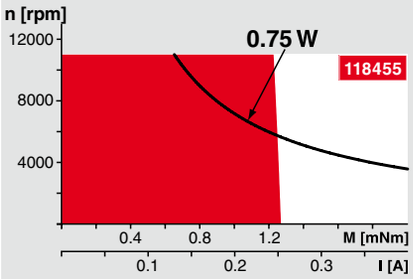

Comments

Continuous operation
In observation of above listed thermal resistance (lines 17 and 18) the maximum permissible winding temperature will be reached during continuous operation at 25°C ambient.
= Thermal limit.

Short term operation
The motor may be briefly overloaded (recurring).

Assigned power rating

maxon Modular System

Overview on page 20–25

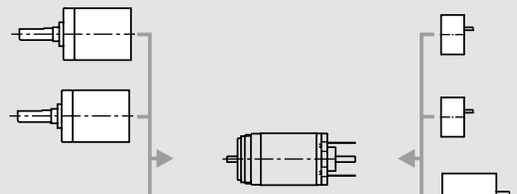

Planetary Gearhead
∅13 mm
0.05 - 0.15 Nm
Page 247

Planetary Gearhead
∅13 mm
0.2 - 0.35 Nm
Page 248

Encoder MR
16 CPT,
2 channels
Page 312

Encoder MR
64 - 256 CPT,
2 channels
Page 313/314

Encoder MEnc
∅13 mm
16 CPT, 2 channels
Page 334

Recommended Electronics:

ESCON 36/2 DC	Page 342
ESCON Module 50/5	343
ESCON 50/5	344
EPOS2 24/2	350
EPOS2 Module 36/2	350
EPOS3 70/10 EtherCAT	357
MAXPOS 50/5	360
Notes	**22**

RE 13 ∅13 mm, Precious Metal Brushes, 2.5 Watt

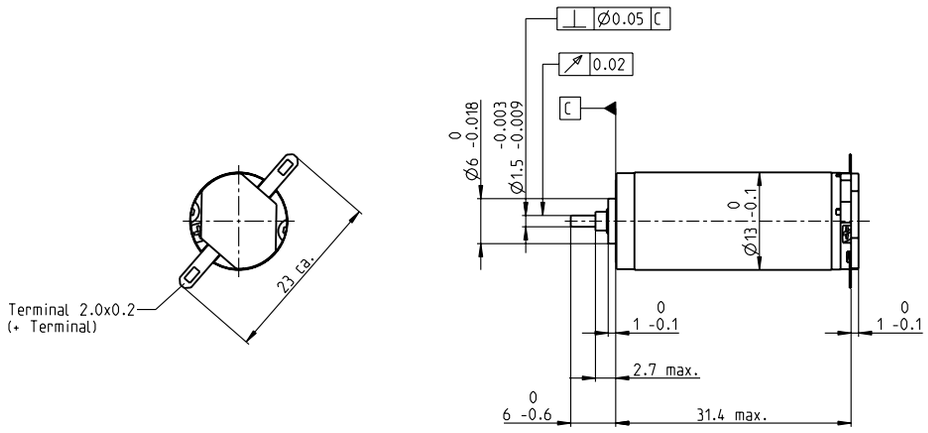

M 1:1

Stock program
Standard program
Special program (on request)

Part Numbers

			118461	118462	118463	118464	118465	118466	118467	118468	118469	118470	118471	118472	118473	118474	118475
Motor Data																	
	Values at nominal voltage																
1	Nominal voltage	V	2.4	3	3	3.6	4.8	4.8	6	7.2	8	10	12	15	15	18	24
2	No load speed	rpm	10600	12200	10700	10800	11400	10100	11400	11400	10900	11400	11000	11100	10300	10600	11500
3	No load current	mA	51.5	50.8	42	35.5	28.8	24.4	23	19.2	16.1	13.8	11	8.87	7.98	6.9	5.82
4	Nominal speed	rpm	9160	10500	8490	8050	7890	6430	7660	7730	7320	7790	7390	7470	6620	6920	7800
5	Nominal torque (max. continuous torque)	mNm	1.44	1.56	1.8	2.16	2.76	2.87	2.81	2.86	2.98	2.9	2.89	2.9	2.88	2.9	2.84
6	Nominal current (max. continuous current)	A	0.72	0.72	0.72	0.72	0.72	0.664	0.586	0.497	0.443	0.363	0.291	0.235	0.217	0.187	0.149
7	Stall torque	mNm	9.95	10.2	8.34	8.25	8.81	7.78	8.51	8.84	9.1	9.15	8.77	8.9	8.13	8.44	8.87
8	Starting current	A	4.63	4.42	3.15	2.63	2.22	1.74	1.72	1.48	1.31	1.11	0.856	0.699	0.592	0.526	0.451
9	Max. efficiency	%	80	80	79	78	79	78	79	79	79	79	79	79	79	79	79
	Characteristics																
10	Terminal resistance	Ω	0.519	0.679	0.951	1.37	2.16	2.75	3.5	4.85	6.11	9.03	14	21.5	25.3	34.2	53.2
11	Terminal inductance	mH	0.0213	0.0247	0.0323	0.0456	0.0727	0.092	0.114	0.164	0.223	0.316	0.485	0.749	0.87	1.19	1.79
12	Torque constant	mNm/A	2.15	2.31	2.65	3.14	3.97	4.46	4.96	5.95	6.94	8.27	10.2	12.7	13.7	16	19.7
13	Speed constant	rpm/V	4440	4130	3610	3040	2410	2140	1930	1600	1380	1160	932	750	696	595	485
14	Speed / torque gradient	rpm/mNm	1070	1210	1300	1330	1310	1320	1360	1310	1210	1260	1270	1260	1280	1270	1310
15	Mechanical time constant	ms	7.65	7.55	7.45	7.37	7.28	7.27	7.28	7.23	7.16	7.2	7.21	7.21	7.21	7.22	7.27
16	Rotor inertia	gcm²	0.681	0.596	0.548	0.53	0.53	0.526	0.512	0.528	0.565	0.545	0.541	0.544	0.536	0.543	0.529

Specifications

	Thermal data	
17	Thermal resistance housing-ambient	33 K/W
18	Thermal resistance winding-housing	7.0 K/W
19	Thermal time constant winding	4.88 s
20	Thermal time constant motor	229 s
21	Ambient temperature	-20…+65°C
22	Max. permissible winding temperature	+85°C
	Mechanical data (sleeve bearings)	
23	Max. permissible speed	19000 rpm
24	Axial play	0.05 - 0.15 mm
25	Radial play	0.014 mm
26	Max. axial load (dynamic)	0.8 N
27	Max. force for press fits (static)	15 N
28	Max. radial loading, 5 mm from flange	1.4 N
	Other specifications	
29	Number of pole pairs	1
30	Number of commutator segments	7
31	Weight of motor	21 g

Values listed in the table are nominal.
Explanation of the figures on page 79.

Operating Range

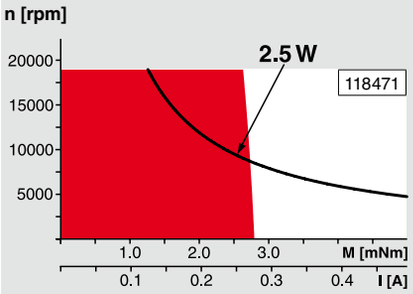

Comments

Continuous operation
In observation of above listed thermal resistance (lines 17 and 18) the maximum permissible winding temperature will be reached during continuous operation at 25°C ambient.
= Thermal limit.

Short term operation
The motor may be briefly overloaded (recurring).

Assigned power rating

maxon Modular System

Overview on page 20–25

Recommended Electronics:

ESCON 36/2 DC	Page 342
ESCON Module 50/5	343
ESCON 50/5	344
Notes	**22**

RE 13 ∅13 mm, Precious Metal Brushes, 2.5 Watt

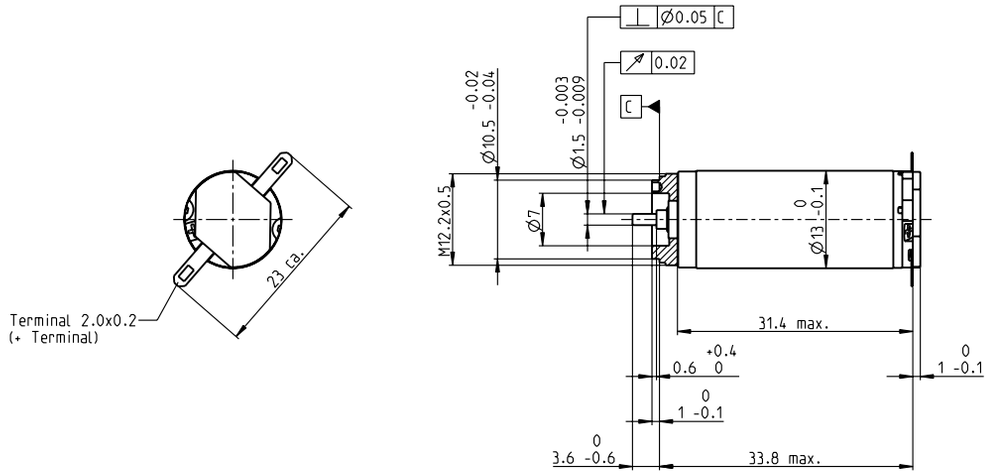

M 1:1

Stock program
Standard program
Special program (on request)

Part Numbers

			118476	118477	118478	118479	118480	118481	118482	118483	118484	118485	118486	118487	118488	118489	118490
Motor Data																	
	Values at nominal voltage																
1	Nominal voltage	V	2.4	3	3	3.6	4.8	4.8	6	7.2	8	10	12	15	15	18	24
2	No load speed	rpm	10600	12200	10700	10800	11400	10100	11400	11400	10900	11400	11000	11100	10300	10600	11500
3	No load current	mA	51.5	50.8	42	35.5	28.8	24.4	23	19.2	16.1	13.8	11	8.87	7.98	6.9	5.82
4	Nominal speed	rpm	9160	10500	8490	8050	7890	6430	7660	7730	7320	7790	7390	7470	6620	6920	7800
5	Nominal torque (max. continuous torque)	mNm	1.44	1.56	1.8	2.16	2.76	2.87	2.81	2.86	2.98	2.9	2.89	2.9	2.88	2.9	2.84
6	Nominal current (max. continuous current)	A	0.72	0.72	0.72	0.72	0.72	0.664	0.586	0.497	0.443	0.363	0.291	0.235	0.217	0.187	0.149
7	Stall torque	mNm	9.95	10.2	8.34	8.25	8.81	7.78	8.51	8.84	9.1	9.15	8.77	8.9	8.13	8.44	8.87
8	Starting current	A	4.63	4.42	3.15	2.63	2.22	1.74	1.72	1.48	1.31	1.11	0.856	0.699	0.592	0.526	0.451
9	Max. efficiency	%	80	80	79	78	79	78	79	79	79	79	79	79	79	79	79
	Characteristics																
10	Terminal resistance	Ω	0.519	0.679	0.951	1.37	2.16	2.75	3.5	4.85	6.11	9.03	14	21.5	25.3	34.2	53.2
11	Terminal inductance	mH	0.0213	0.0247	0.0323	0.0456	0.0727	0.092	0.114	0.164	0.223	0.316	0.485	0.749	0.87	1.19	1.79
12	Torque constant	mNm/A	2.15	2.31	2.65	3.14	3.97	4.46	4.96	5.95	6.94	8.27	10.2	12.7	13.7	16	19.7
13	Speed constant	rpm/V	4440	4130	3610	3040	2410	2140	1930	1600	1380	1160	932	750	696	595	485
14	Speed / torque gradient	rpm/mNm	1070	1210	1300	1330	1310	1320	1360	1310	1210	1260	1270	1260	1280	1270	1310
15	Mechanical time constant	ms	7.65	7.55	7.45	7.37	7.28	7.27	7.28	7.23	7.16	7.2	7.21	7.21	7.21	7.22	7.27
16	Rotor inertia	gcm^2	0.681	0.596	0.548	0.53	0.53	0.526	0.512	0.528	0.565	0.545	0.541	0.544	0.536	0.543	0.529

Specifications

	Thermal data	
17	Thermal resistance housing-ambient	33 K/W
18	Thermal resistance winding-housing	7.0 K/W
19	Thermal time constant winding	4.88 s
20	Thermal time constant motor	229 s
21	Ambient temperature	-20…+65°C
22	Max. permissible winding temperature	+85°C
	Mechanical data (sleeve bearings)	
23	Max. permissible speed	19000 rpm
24	Axial play	0.05 - 0.15 mm
25	Radial play	0.014 mm
26	Max. axial load (dynamic)	0.8 N
27	Max. force for press fits (static)	15 N
28	Max. radial loading, 5 mm from flange	1.4 N
	Other specifications	
29	Number of pole pairs	1
30	Number of commutator segments	7
31	Weight of motor	24 g

Values listed in the table are nominal.
Explanation of the figures on page 79.

Operating Range

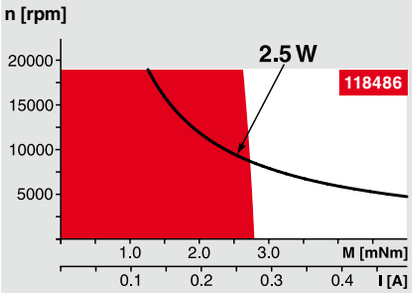

Comments

Continuous operation
In observation of above listed thermal resistance (lines 17 and 18) the maximum permissible winding temperature will be reached during continuous operation at 25°C ambient.
= Thermal limit.

Short term operation
The motor may be briefly overloaded (recurring).

Assigned power rating

maxon Modular System

Overview on page 20–25

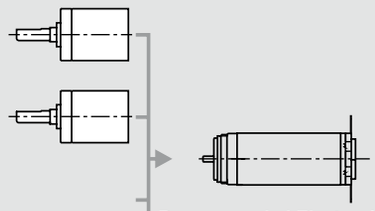

Planetary Gearhead
∅13 mm
0.05 - 0.15 Nm
Page 247

Planetary Gearhead
∅13 mm
0.2 - 0.35 Nm
Page 248

Recommended Electronics:

ESCON 36/2 DC	Page 342
ESCON Module 50/5	343
ESCON 50/5	344
Notes	**22**

RE 13 ∅13 mm, Precious Metal Brushes, 2 Watt

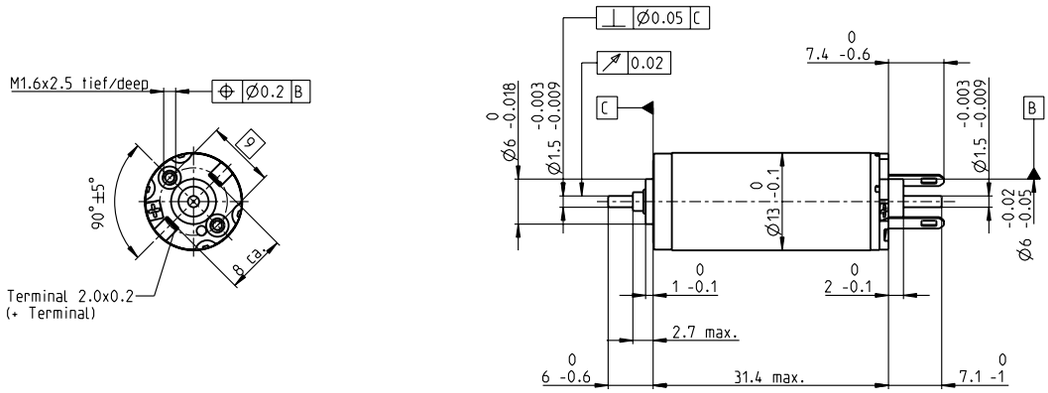

M 1:1

Stock program
Standard program
Special program (on request)

Part Numbers

			118491	118492	118493	118494	118495	118496	118497	118498	118499	118500	118501	118502	118503	118504	118505
Motor Data																	
	Values at nominal voltage																
1	Nominal voltage	V	1.5	1.5	1.8	2.4	3	3	3.6	4.2	4.8	6	7.2	9	10	12	15
2	No load speed	rpm	6570	6090	6380	7170	7100	6300	6800	6620	6490	6810	6590	6630	6840	7020	7150
3	No load current	mA	43.8	39.8	35.3	30.8	24.3	20.8	19.2	15.8	13.5	11.5	9.19	7.41	6.94	5.99	4.91
4	Nominal speed	rpm	5170	4320	4160	4400	3560	2550	3000	2880	2880	3130	2880	2940	3120	3330	3400
5	Nominal torque (max. continuous torque)	mNm	1.46	1.58	1.82	2.18	2.78	2.91	2.85	2.91	3.02	2.95	2.93	2.94	2.92	2.93	2.88
6	Nominal current (max. continuous current)	A	0.72	0.72	0.72	0.72	0.72	0.669	0.592	0.502	0.446	0.367	0.294	0.237	0.218	0.188	0.151
7	Stall torque	mNm	6.22	5.12	5.01	5.5	5.51	4.86	5.1	5.16	5.46	5.49	5.26	5.34	5.42	5.63	5.54
8	Starting current	A	2.89	2.21	1.89	1.75	1.39	1.09	1.03	0.866	0.786	0.665	0.514	0.419	0.395	0.351	0.282
9	Max. efficiency	%	77	75	75	76	76	75	75	75	76	76	75	76	76	76	76
	Characteristics																
10	Terminal resistance	Ω	0.519	0.679	0.951	1.37	2.16	2.75	3.5	4.85	6.11	9.03	14	21.5	25.3	34.2	53.2
11	Terminal inductance	mH	0.0213	0.0247	0.0323	0.0456	0.0727	0.092	0.114	0.164	0.223	0.316	0.485	0.749	0.87	1.19	1.79
12	Torque constant	mNm/A	2.15	2.31	2.65	3.14	3.97	4.46	4.96	5.95	6.94	8.27	10.2	12.7	13.7	16	19.7
13	Speed constant	rpm/V	4440	4130	3610	3040	2410	2140	1930	1600	1380	1160	932	750	696	595	485
14	Speed / torque gradient	rpm/mNm	1070	1210	1300	1330	1310	1320	1360	1310	1210	1260	1270	1260	1280	1270	1310
15	Mechanical time constant	ms	7.65	7.55	7.45	7.37	7.28	7.27	7.28	7.23	7.16	7.2	7.21	7.21	7.21	7.22	7.27
16	Rotor inertia	gcm²	0.681	0.596	0.548	0.53	0.53	0.526	0.512	0.528	0.565	0.545	0.541	0.544	0.536	0.543	0.529

Specifications

	Thermal data	
17	Thermal resistance housing-ambient	33 K/W
18	Thermal resistance winding-housing	7.0 K/W
19	Thermal time constant winding	4.88 s
20	Thermal time constant motor	229 s
21	Ambient temperature	-20…+65°C
22	Max. permissible winding temperature	+85°C
	Mechanical data (sleeve bearings)	
23	Max. permissible speed	11000 rpm
24	Axial play	0.05 - 0.15 mm
25	Radial play	0.014 mm
26	Max. axial load (dynamic)	0.8 N
27	Max. force for press fits (static)	15 N
	(static, shaft supported)	95 N
28	Max. radial loading, 5 mm from flange	1.4 N
	Other specifications	
29	Number of pole pairs	1
30	Number of commutator segments	7
31	Weight of motor	21 g

Values listed in the table are nominal.
Explanation of the figures on page 79.

Operating Range

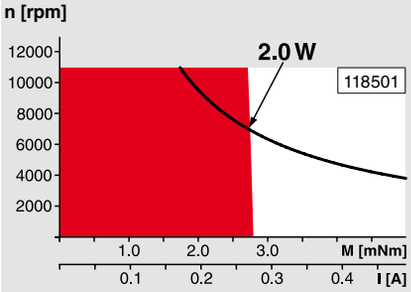

Comments

Continuous operation
In observation of above listed thermal resistance (lines 17 and 18) the maximum permissible winding temperature will be reached during continuous operation at 25°C ambient.
= Thermal limit.

Short term operation
The motor may be briefly overloaded (recurring).

Assigned power rating

maxon Modular System

Overview on page 20–25

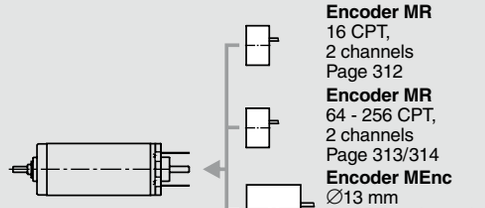

Encoder MR
16 CPT,
2 channels
Page 312

Encoder MR
64 - 256 CPT,
2 channels
Page 313/314

Encoder MEnc
∅13 mm
16 CPT, 2 channels
Page 334

Recommended Electronics:

ESCON 36/2 DC	Page 342
ESCON Module 50/5	343
ESCON 50/5	344
EPOS2 24/2	350
EPOS2 Module 36/2	350
EPOS3 70/10 EtherCAT	357
MAXPOS 50/5	360
Notes	**22**

RE 13 ∅13 mm, Precious Metal Brushes, 2 Watt

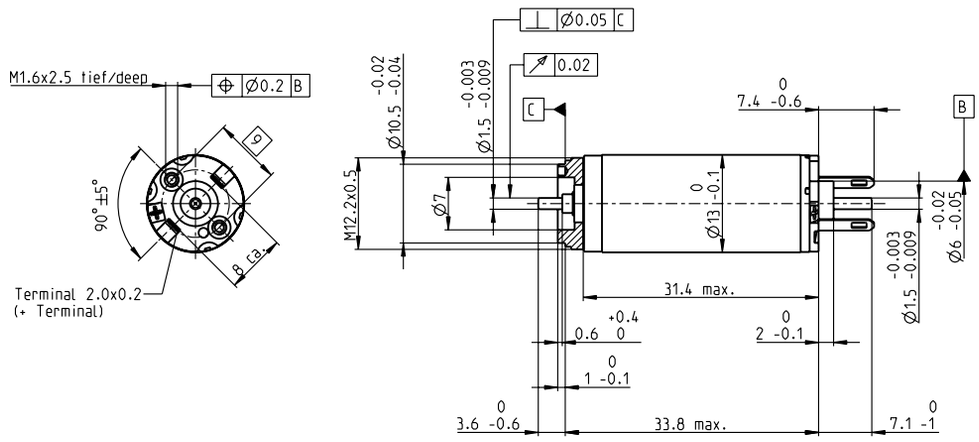

M 1:1

Stock program
Standard program
Special program (on request)

Part Numbers

			118506	118507	118508	118509	118510	118511	118512	118513	118514	118515	118516	118517	118518	118519	118520
Motor Data																	
	Values at nominal voltage																
1	Nominal voltage	V	1.5	1.5	1.8	2.4	3	3	3.6	4.2	4.8	6	7.2	9	10	12	15
2	No load speed	rpm	6570	6090	6380	7170	7100	6300	6800	6620	6490	6810	6590	6630	6840	7020	7150
3	No load current	mA	43.8	39.8	35.3	30.8	24.3	20.8	19.2	15.8	13.5	11.5	9.19	7.41	6.94	5.99	4.91
4	Nominal speed	rpm	5170	4320	4160	4400	3560	2550	3000	2880	2880	3130	2880	2940	3120	3330	3400
5	Nominal torque (max. continuous torque)	mNm	1.46	1.58	1.82	2.18	2.78	2.91	2.85	2.91	3.02	2.95	2.93	2.94	2.92	2.93	2.88
6	Nominal current (max. continuous current)	A	0.72	0.72	0.72	0.72	0.72	0.669	0.592	0.502	0.446	0.367	0.294	0.237	0.218	0.188	0.151
7	Stall torque	mNm	6.22	5.12	5.01	5.5	5.51	4.86	5.1	5.16	5.46	5.49	5.26	5.34	5.42	5.63	5.54
8	Starting current	A	2.89	2.21	1.89	1.75	1.39	1.09	1.03	0.866	0.786	0.665	0.514	0.419	0.395	0.351	0.282
9	Max. efficiency	%	77	75	75	76	76	75	75	75	76	76	75	76	76	76	76
	Characteristics																
10	Terminal resistance	Ω	0.519	0.679	0.951	1.37	2.16	2.75	3.5	4.85	6.11	9.03	14	21.5	25.3	34.2	53.2
11	Terminal inductance	mH	0.0213	0.0247	0.0323	0.0456	0.0727	0.092	0.114	0.164	0.223	0.316	0.485	0.749	0.87	1.19	1.79
12	Torque constant	mNm/A	2.15	2.31	2.65	3.14	3.97	4.46	4.96	5.95	6.94	8.27	10.2	12.7	13.7	16	19.7
13	Speed constant	rpm/V	4440	4130	3610	3040	2410	2140	1930	1600	1380	1160	932	750	696	595	485
14	Speed / torque gradient	rpm/mNm	1070	1210	1300	1330	1310	1320	1360	1310	1210	1260	1270	1260	1280	1270	1310
15	Mechanical time constant	ms	7.65	7.55	7.45	7.37	7.28	7.27	7.28	7.23	7.16	7.2	7.21	7.21	7.21	7.22	7.27
16	Rotor inertia	gcm^2	0.681	0.596	0.548	0.53	0.53	0.526	0.512	0.528	0.565	0.545	0.541	0.544	0.536	0.543	0.529

Specifications

	Thermal data	
17	Thermal resistance housing-ambient	33 K/W
18	Thermal resistance winding-housing	7.0 K/W
19	Thermal time constant winding	4.88 s
20	Thermal time constant motor	229 s
21	Ambient temperature	-20…+65°C
22	Max. permissible winding temperature	+85°C
	Mechanical data (sleeve bearings)	
23	Max. permissible speed	11 000 rpm
24	Axial play	0.05 - 0.15 mm
25	Radial play	0.014 mm
26	Max. axial load (dynamic)	0.8 N
27	Max. force for press fits (static)	15 N
	(static, shaft supported)	95 N
28	Max. radial loading, 5 mm from flange	1.4 N
	Other specifications	
29	Number of pole pairs	1
30	Number of commutator segments	7
31	Weight of motor	24 g

Values listed in the table are nominal.
Explanation of the figures on page 79.

Operating Range

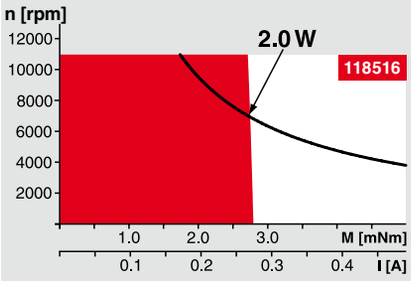

Comments

Continuous operation
In observation of above listed thermal resistance (lines 17 and 18) the maximum permissible winding temperature will be reached during continuous operation at 25°C ambient.
= Thermal limit.

Short term operation
The motor may be briefly overloaded (recurring).

Assigned power rating

maxon Modular System

Overview on page 20–25

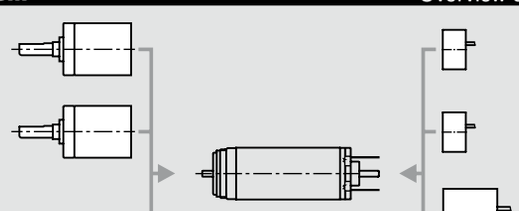

Planetary Gearhead
∅13 mm
0.05 - 0.15 Nm
Page 247

Planetary Gearhead
∅13 mm
0.2 - 0.35 Nm
Page 248

Encoder MR
16 CPT,
2 channels
Page 312

Encoder MR
64 - 256 CPT,
2 channels
Page 313/314

Encoder MEnc
∅13 mm
16 CPT, 2 channels
Page 334

Recommended Electronics:

ESCON 36/2 DC	Page 342
ESCON Module 50/5	343
ESCON 50/5	344
EPOS2 24/2	350
EPOS2 Module 36/2	350
EPOS3 70/10 EtherCAT	357
MAXPOS 50/5	360
Notes	**22**

RE 13 ∅13 mm, Graphite Brushes, 1.5 Watt

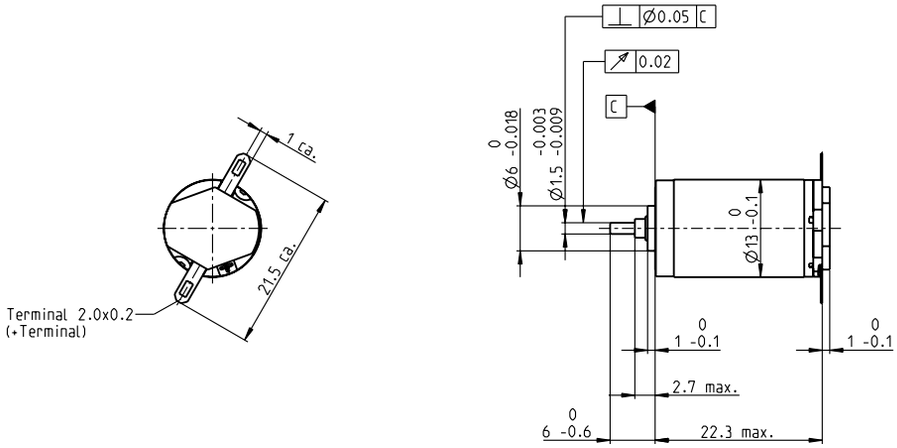

M 1:1

Stock program
Standard program
Special program (on request)

Part Numbers

Motor Data		118521	118522	118523	118524	118525	118526	118527	118528	118529	118530	118531	118532	118533	118534	118535
Values at nominal voltage																
1 Nominal voltage	V	1.2	1.5	2.4	3	3.6	4.2	4.8	6	7.2	9	12	12	15	18	20
2 No load speed	rpm	9360	10400	12300	12300	12300	12800	11900	12400	12100	12200	13200	12200	13100	13900	13300
3 No load current	mA	423	359	247	191	156	138	109	91.7	73.2	58.9	49.1	44.6	38.8	35.1	29.7
4 Nominal speed	rpm	6840	7080	7500	6290	6590	7290	6430	6970	6650	6750	7860	6780	7750	8790	7950
5 Nominal torque (max. continuous torque)	mNm	0.262	0.384	0.755	1.06	1.13	1.17	1.22	1.2	1.23	1.23	1.19	1.21	1.19	1.19	1.18
6 Nominal current (max. continuous current)	A	0.72	0.72	0.72	0.707	0.608	0.549	0.458	0.376	0.308	0.248	0.197	0.184	0.156	0.138	0.118
7 Stall torque	mNm	1.3	1.53	2.26	2.45	2.71	3.02	2.9	2.99	2.98	3	3.19	2.93	3.17	3.46	3.18
8 Starting current	A	1.66	1.6	1.53	1.28	1.15	1.12	0.878	0.748	0.601	0.486	0.417	0.359	0.328	0.316	0.251
9 Max. efficiency	%	17	18	29	33	36	39	40	41	42	42	43	42	44	45	44
Characteristics																
10 Terminal resistance	Ω	0.721	0.938	1.57	2.34	3.12	3.74	5.47	8.02	12	18.5	28.8	33.4	45.7	57	79.7
11 Terminal inductance	mH	0.0061	0.0091	0.0216	0.0362	0.0545	0.0719	0.108	0.158	0.243	0.377	0.579	0.661	0.921	1.19	1.59
12 Torque constant	mNm/A	0.782	0.956	1.48	1.91	2.35	2.69	3.3	4	4.95	6.17	7.64	8.17	9.64	10.9	12.7
13 Speed constant	rpm/V	12200	9990	6470	5000	4070	3550	2890	2390	1930	1550	1250	1170	990	872	753
14 Speed / torque gradient	rpm/mNm	11300	9810	6870	6110	5410	4930	4790	4800	4670	4650	4700	4790	4690	4540	4730
15 Mechanical time constant	ms	42.3	29.9	20.8	18.4	17.2	16.4	15.8	15.4	15	14.8	14.7	14.7	14.6	14.4	14.6
16 Rotor inertia	gcm²	0.358	0.291	0.29	0.288	0.303	0.318	0.315	0.306	0.308	0.304	0.3	0.293	0.297	0.303	0.294

Specifications

Thermal data	
17 Thermal resistance housing-ambient	46 K/W
18 Thermal resistance winding-housing	14 K/W
19 Thermal time constant winding	5.18 s
20 Thermal time constant motor	210 s
21 Ambient temperature	-20…+85°C
22 Max. permissible winding temperature	+125°C
Mechanical data (sleeve bearings)	
23 Max. permissible speed	16000 rpm
24 Axial play	0.05 - 0.15 mm
25 Radial play	0.014 mm
26 Max. axial load (dynamic)	0.8 N
27 Max. force for press fits (static)	15 N
28 Max. radial loading, 5 mm from flange	1.4 N
Other specifications	
29 Number of pole pairs	1
30 Number of commutator segments	7
31 Weight of motor	15 g

Values listed in the table are nominal.
Explanation of the figures on page 79.

Operating Range

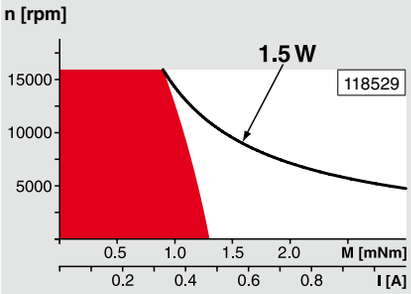

Comments

Continuous operation
In observation of above listed thermal resistance (lines 17 and 18) the maximum permissible winding temperature will be reached during continuous operation at 25°C ambient.
= Thermal limit.

Short term operation
The motor may be briefly overloaded (recurring).

Assigned power rating

maxon Modular System

Overview on page 20–25

Recommended Electronics:

ESCON 36/2 DC	Page 342
ESCON Module 50/5	343
ESCON 50/5	344
Notes	**22**

RE 13 ∅13 mm, Graphite Brushes, 1.5 Watt

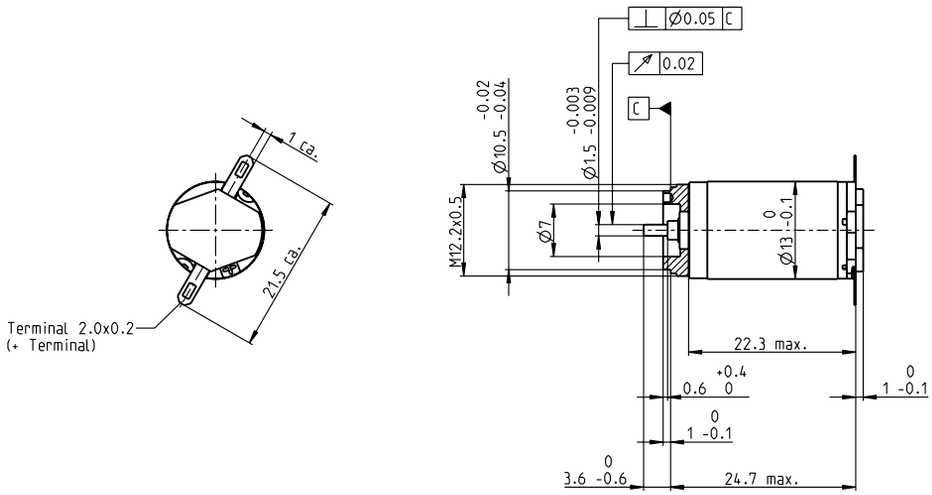

M 1:1

Stock program
Standard program
Special program (on request)

Part Numbers

Motor Data		118536	118537	118538	118539	118540	118541	118542	118543	118544	118545	118546	118547	118548	118549	118550
Values at nominal voltage																
1 Nominal voltage	V	1.2	1.5	2.4	3	3.6	4.2	4.8	6	7.2	9	12	12	15	18	20
2 No load speed	rpm	9360	10400	12300	12300	12300	12800	11900	12400	12100	12200	13200	12200	13100	13900	13300
3 No load current	mA	423	359	247	191	156	138	109	91.7	73.2	58.9	49.1	44.6	38.8	35.1	29.7
4 Nominal speed	rpm	6840	7080	7500	6290	6590	7290	6430	6970	6650	6750	7860	6780	7750	8790	7950
5 Nominal torque (max. continuous torque)	mNm	0.262	0.384	0.755	1.06	1.13	1.17	1.22	1.2	1.23	1.23	1.19	1.21	1.19	1.19	1.18
6 Nominal current (max. continuous current)	A	0.72	0.72	0.72	0.707	0.608	0.549	0.458	0.376	0.308	0.248	0.197	0.184	0.156	0.138	0.118
7 Stall torque	mNm	1.3	1.53	2.26	2.45	2.71	3.02	2.9	2.99	2.98	3	3.19	2.93	3.17	3.46	3.18
8 Starting current	A	1.66	1.6	1.53	1.28	1.15	1.12	0.878	0.748	0.601	0.486	0.417	0.359	0.328	0.316	0.251
9 Max. efficiency	%	17	18	29	33	36	39	40	41	42	42	43	42	44	45	44
Characteristics																
10 Terminal resistance	Ω	0.721	0.938	1.57	2.34	3.12	3.74	5.47	8.02	12	18.5	28.8	33.4	45.7	57	79.7
11 Terminal inductance	mH	0.0061	0.0091	0.0216	0.0362	0.0545	0.0719	0.108	0.158	0.243	0.377	0.579	0.661	0.921	1.19	1.59
12 Torque constant	mNm/A	0.782	0.956	1.48	1.91	2.35	2.69	3.3	4	4.95	6.17	7.64	8.17	9.64	10.9	12.7
13 Speed constant	rpm/V	12200	9990	6470	5000	4070	3550	2890	2390	1930	1550	1250	1170	990	872	753
14 Speed / torque gradient	rpm/mNm	11300	9810	6870	6110	5410	4930	4790	4800	4670	4650	4700	4790	4690	4540	4730
15 Mechanical time constant	ms	42.3	29.9	20.8	18.4	17.2	16.4	15.8	15.4	15	14.8	14.7	14.7	14.6	14.4	14.6
16 Rotor inertia	gcm^2	0.358	0.291	0.29	0.288	0.303	0.318	0.315	0.306	0.308	0.304	0.3	0.293	0.297	0.303	0.294

Specifications

	Thermal data	
17	Thermal resistance housing-ambient	46 K/W
18	Thermal resistance winding-housing	14 K/W
19	Thermal time constant winding	5.18 s
20	Thermal time constant motor	210 s
21	Ambient temperature	-20…+85°C
22	Max. permissible winding temperature	+125°C
	Mechanical data (sleeve bearings)	
23	Max. permissible speed	16000 rpm
24	Axial play	0.05 - 0.15 mm
25	Radial play	0.014 mm
26	Max. axial load (dynamic)	0.8 N
27	Max. force for press fits (static)	15 N
28	Max. radial loading, 5 mm from flange	1.4 N
	Other specifications	
29	Number of pole pairs	1
30	Number of commutator segments	7
31	Weight of motor	17 g

Values listed in the table are nominal.
Explanation of the figures on page 79.

Operating Range

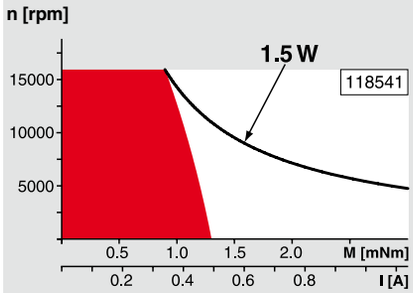

Comments

Continuous operation
In observation of above listed thermal resistance (lines 17 and 18) the maximum permissible winding temperature will be reached during continuous operation at 25°C ambient.
= Thermal limit.

Short term operation
The motor may be briefly overloaded (recurring).

Assigned power rating

maxon Modular System

Overview on page 20–25

Planetary Gearhead
∅13 mm
0.05 - 0.15 Nm
Page 247

Planetary Gearhead
∅13 mm
0.2 - 0.35 Nm
Page 248

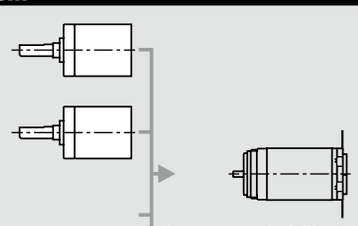

Recommended Electronics:

ESCON 36/2 DC	Page 342
ESCON Module 50/5	343
ESCON 50/5	344
Notes	**22**

RE 13 ∅13 mm, Graphite Brushes, 1.5 Watt

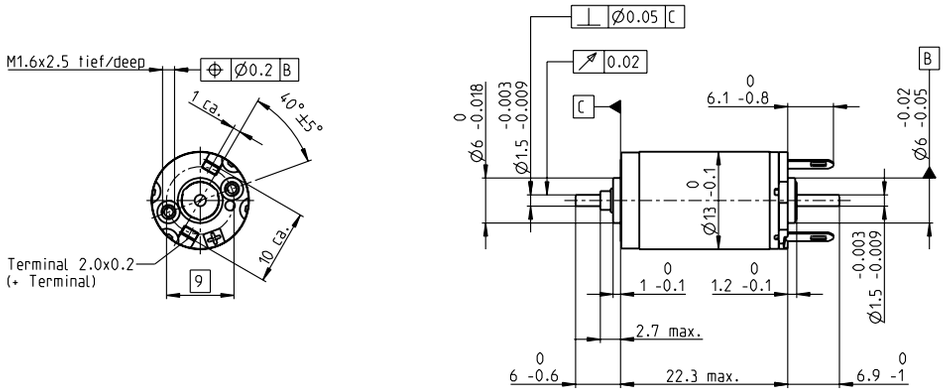

M 1:1

Stock program
Standard program
Special program (on request)

Part Numbers

Motor Data		118555	118556	118557	118558	118559	118560	118561	118562	118563	118564	118565	118566
Values at nominal voltage													
1 Nominal voltage	V	3	3.6	4.2	4.8	6	7.2	9	12	12	15	18	20
2 No load speed	rpm	12300	12300	12800	11900	12400	12100	12200	13200	12200	13100	13900	13300
3 No load current	mA	191	156	138	109	91.7	73.2	58.9	49.1	44.6	38.8	35.1	29.7
4 Nominal speed	rpm	6290	6590	7290	6430	6970	6650	6750	7860	6780	7750	8790	7950
5 Nominal torque (max. continuous torque)	mNm	1.06	1.13	1.17	1.22	1.2	1.23	1.23	1.19	1.21	1.19	1.19	1.18
6 Nominal current (max. continuous current)	A	0.707	0.608	0.549	0.458	0.376	0.308	0.248	0.197	0.184	0.156	0.138	0.118
7 Stall torque	mNm	2.45	2.71	3.02	2.9	2.99	2.98	3	3.19	2.93	3.17	3.46	3.18
8 Starting current	A	1.28	1.15	1.12	0.878	0.748	0.601	0.486	0.417	0.359	0.328	0.316	0.251
9 Max. efficiency	%	33	36	39	40	41	42	42	43	42	44	45	44
Characteristics													
10 Terminal resistance	Ω	2.34	3.12	3.74	5.47	8.02	12	18.5	28.8	33.4	45.7	57	79.7
11 Terminal inductance	mH	0.0362	0.0545	0.0719	0.108	0.158	0.243	0.377	0.579	0.661	0.921	1.19	1.59
12 Torque constant	mNm/A	1.91	2.35	2.69	3.3	4	4.95	6.17	7.64	8.17	9.64	10.9	12.7
13 Speed constant	rpm/V	5000	4070	3550	2890	2390	1930	1550	1250	1170	990	872	753
14 Speed / torque gradient	rpm/mNm	6110	5410	4930	4790	4800	4670	4650	4700	4790	4690	4540	4730
15 Mechanical time constant	ms	18.4	17.2	16.4	15.8	15.4	15	14.8	14.7	14.7	14.6	14.4	14.6
16 Rotor inertia	gcm²	0.288	0.303	0.318	0.315	0.306	0.308	0.304	0.3	0.293	0.297	0.303	0.294

Specifications

Thermal data	
17 Thermal resistance housing-ambient	46 K/W
18 Thermal resistance winding-housing	14 K/W
19 Thermal time constant winding	5.38 s
20 Thermal time constant motor	210 s
21 Ambient temperature	-20…+85°C
22 Max. permissible winding temperature	+125°C
Mechanical data (sleeve bearings)	
23 Max. permissible speed	16000 rpm
24 Axial play	0.05 - 0.15 mm
25 Radial play	0.014 mm
26 Max. axial load (dynamic)	0.8 N
27 Max. force for press fits (static)	15 N
(static, shaft supported)	140 N
28 Max. radial loading, 5 mm from flange	1.4 N
Other specifications	
29 Number of pole pairs	1
30 Number of commutator segments	7
31 Weight of motor	15 g

Values listed in the table are nominal.
Explanation of the figures on page 79.

Operating Range

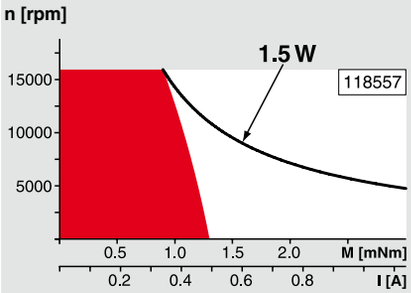

Comments

Continuous operation
In observation of above listed thermal resistance (lines 17 and 18) the maximum permissible winding temperature will be reached during continuous operation at 25°C ambient.
= Thermal limit.

Short term operation
The motor may be briefly overloaded (recurring).

Assigned power rating

maxon Modular System

Overview on page 20–25

Recommended Electronics:

ESCON 36/2 DC	Page 342
ESCON Module 50/5	343
ESCON 50/5	343
EPOS2 24/2	350
EPOS2 Module 36/2	350
EPOS3 70/10 EtherCAT	357
MAXPOS 50/5	360
Notes	**22**

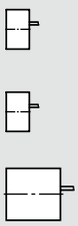

Encoder MR
16 CPT,
2 channels
Page 312

Encoder MR
64 - 256 CPT,
2 channels
Page 313/314

Encoder MEnc
∅13 mm
16 CPT, 2 channels
Page 334

RE 13 ∅13 mm, Graphite Brushes, 1.5 Watt

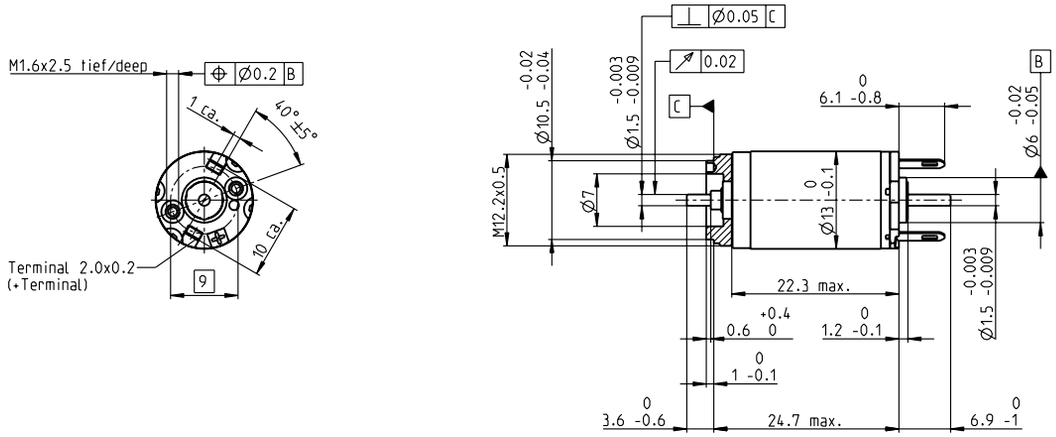

M 1:1

Stock program
Standard program
Special program (on request)

Part Numbers

			118570	118571	118572	118573	118574	118575	118576	118577	118578	118579	118580	118581
Motor Data														
	Values at nominal voltage													
1	Nominal voltage	V	3	3.6	4.2	4.8	6	7.2	9	12	12	15	18	20
2	No load speed	rpm	12300	12300	12800	11900	12400	12100	12200	13200	12200	13100	13900	13300
3	No load current	mA	191	156	138	109	91.7	73.2	58.9	49.1	44.6	38.8	35.1	29.7
4	Nominal speed	rpm	6290	6590	7290	6430	6970	6650	6750	7860	6780	7750	8790	7950
5	Nominal torque (max. continuous torque)	mNm	1.06	1.13	1.17	1.22	1.2	1.23	1.23	1.19	1.21	1.19	1.19	1.18
6	Nominal current (max. continuous current)	A	0.707	0.608	0.549	0.458	0.376	0.308	0.248	0.197	0.184	0.156	0.138	0.118
7	Stall torque	mNm	2.45	2.71	3.02	2.9	2.99	2.98	3	3.19	2.93	3.17	3.46	3.18
8	Starting current	A	1.28	1.15	1.12	0.878	0.748	0.601	0.486	0.417	0.359	0.328	0.316	0.251
9	Max. efficiency	%	33	36	39	40	41	42	42	43	42	44	45	44
	Characteristics													
10	Terminal resistance	Ω	2.34	3.12	3.74	5.47	8.02	12	18.5	28.8	33.4	45.7	57	79.7
11	Terminal inductance	mH	0.0362	0.0545	0.0719	0.108	0.158	0.243	0.377	0.579	0.661	0.921	1.19	1.59
12	Torque constant	mNm/A	1.91	2.35	2.69	3.3	4	4.95	6.17	7.64	8.17	9.64	10.9	12.7
13	Speed constant	rpm/V	5000	4070	3550	2890	2390	1930	1550	1250	1170	990	872	753
14	Speed / torque gradient	rpm/mNm	6110	5410	4930	4790	4800	4670	4650	4700	4790	4690	4540	4730
15	Mechanical time constant	ms	18.4	17.2	16.4	15.8	15.4	15	14.8	14.7	14.7	14.6	14.4	14.6
16	Rotor inertia	gcm²	0.288	0.303	0.318	0.315	0.306	0.308	0.304	0.3	0.293	0.297	0.303	0.294

Specifications

	Thermal data	
17	Thermal resistance housing-ambient	46 K/W
18	Thermal resistance winding-housing	14 K/W
19	Thermal time constant winding	5.38 s
20	Thermal time constant motor	210 s
21	Ambient temperature	-20…+85°C
22	Max. permissible winding temperature	+125°C
	Mechanical data (sleeve bearings)	
23	Max. permissible speed	16000 rpm
24	Axial play	0.05 - 0.15 mm
25	Radial play	0.014 mm
26	Max. axial load (dynamic)	0.8 N
27	Max. force for press fits (static)	15 N
	(static, shaft supported)	140 N
28	Max. radial loading, 5 mm from flange	1.4 N
	Other specifications	
29	Number of pole pairs	1
30	Number of commutator segments	7
31	Weight of motor	17 g

Values listed in the table are nominal.
Explanation of the figures on page 79.

Operating Range

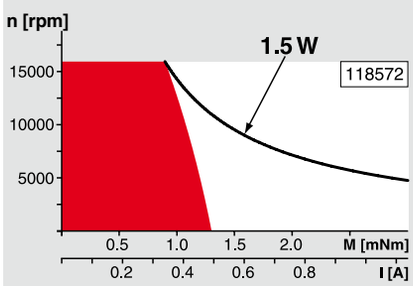

Comments

Continuous operation
In observation of above listed thermal resistance (lines 17 and 18) the maximum permissible winding temperature will be reached during continuous operation at 25°C ambient.
= Thermal limit.

Short term operation
The motor may be briefly overloaded (recurring).

Assigned power rating

maxon Modular System

Overview on page 20–25

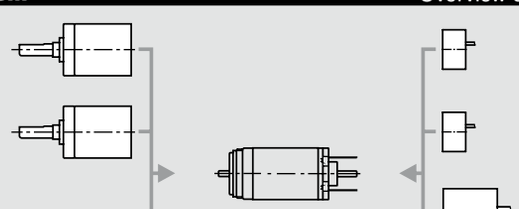

Planetary Gearhead
∅13 mm
0.05 - 0.15 Nm
Page 247

Planetary Gearhead
∅13 mm
0.2 - 0.35 Nm
Page 248

Encoder MR
16 CPT,
2 channels
Page 312

Encoder MR
64 - 256 CPT,
2 channels
Page 313/314

Encoder MEnc
∅13 mm
16 CPT, 2 channels
Page 334

Recommended Electronics:

ESCON 36/2 DC	Page 342
ESCON Module 50/5	343
ESCON 50/5	344
EPOS2 24/2	350
EPOS2 Module 36/2	350
EPOS3 70/10 EtherCAT	357
MAXPOS 50/5	360
Notes	**22**

RE 13 ∅13 mm, Graphite Brushes, 3 Watt

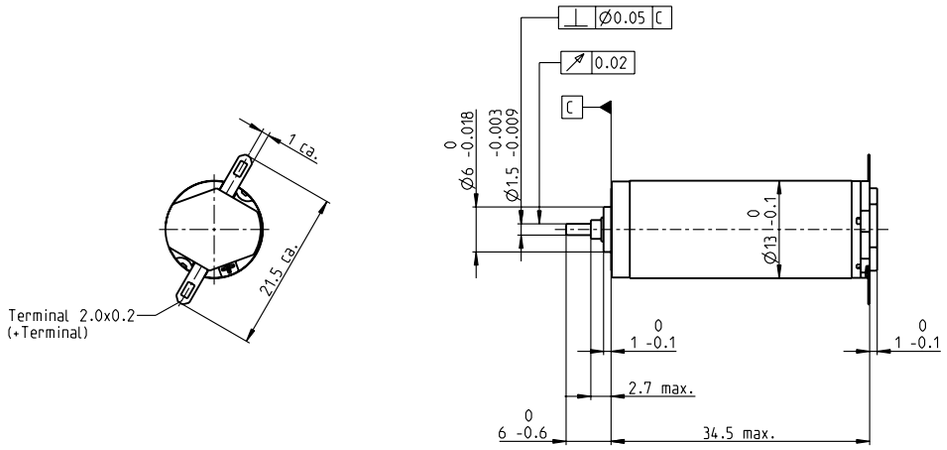

M 1:1

Stock program
Standard program
Special program (on request)

Part Numbers

			118582	118583	118584	118585	118586	118587	118588	118589	118590	118591	118592	118593	118594	118595	118596
Motor Data																	
	Values at nominal voltage																
1	Nominal voltage	V	3	3.6	3.6	4.8	6	6	7.2	9	10	12	15	18	21	24	30
2	No load speed	rpm	11900	13400	11700	13400	13400	11900	12900	13500	12900	13100	13200	12800	13800	13500	13800
3	No load current	mA	164	160	133	118	93.3	79	73.5	62.5	52.6	44.3	35.9	28.5	27.4	23.2	19.1
4	Nominal speed	rpm	9350	10700	8620	9940	10100	8500	9610	10400	9890	10000	10200	9730	10900	10600	10800
5	Nominal torque (max. continuous torque)	mNm	1.25	1.35	1.62	1.97	2.1	2.22	2.17	2.22	2.38	2.36	2.37	2.42	2.34	2.39	2.34
6	Nominal current (max. continuous current)	A	0.72	0.72	0.72	0.72	0.604	0.559	0.496	0.424	0.384	0.32	0.259	0.213	0.193	0.167	0.134
7	Stall torque	mNm	7.57	8.27	7.23	8.71	9.4	8.5	9.18	10.2	10.7	10.6	10.7	10.5	11.3	11.2	11.1
8	Starting current	A	3.46	3.51	2.69	2.72	2.33	1.87	1.82	1.69	1.52	1.25	1.03	0.814	0.809	0.688	0.556
9	Max. efficiency	%	51	53	53	57	60	60	61	64	65	65	66	66	67	67	67
	Characteristics																
10	Terminal resistance	Ω	0.867	1.02	1.34	1.76	2.57	3.21	3.96	5.32	6.6	9.56	14.6	22.1	26	34.9	54
11	Terminal inductance	mH	0.0213	0.0247	0.0323	0.0456	0.0727	0.092	0.114	0.164	0.223	0.316	0.485	0.749	0.87	1.19	1.79
12	Torque constant	mNm/A	2.19	2.36	2.69	3.2	4.04	4.54	5.05	6.06	7.07	8.41	10.4	13	14	16.3	20
13	Speed constant	rpm/V	4370	4050	3550	2990	2370	2100	1890	1580	1350	1140	915	737	684	585	477
14	Speed / torque gradient	rpm/mNm	1730	1760	1770	1640	1510	1480	1480	1390	1260	1290	1280	1260	1270	1250	1290
15	Mechanical time constant	ms	12.3	11	10.1	9.12	8.38	8.17	7.95	7.66	7.48	7.36	7.25	7.17	7.14	7.12	7.12
16	Rotor inertia	gcm²	0.681	0.596	0.548	0.53	0.53	0.526	0.512	0.528	0.565	0.545	0.541	0.544	0.536	0.543	0.529

Specifications

	Thermal data	
17	Thermal resistance housing-ambient	33 K/W
18	Thermal resistance winding-housing	7.0 K/W
19	Thermal time constant winding	4.88 s
20	Thermal time constant motor	93.8 s
21	Ambient temperature	-20…+65°C
22	Max. permissible winding temperature	+85°C
	Mechanical data (sleeve bearings)	
23	Max. permissible speed	16000 rpm
24	Axial play	0.05 - 0.15 mm
25	Radial play	0.014 mm
26	Max. axial load (dynamic)	0.8 N
27	Max. force for press fits (static)	15 N
28	Max. radial loading, 5 mm from flange	1.4 N
	Other specifications	
29	Number of pole pairs	1
30	Number of commutator segments	7
31	Weight of motor	24 g

Values listed in the table are nominal.
Explanation of the figures on page 79.

Operating Range

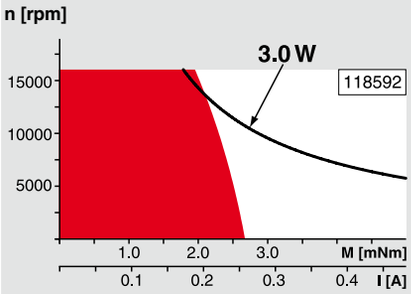

Comments

Continuous operation
In observation of above listed thermal resistance (lines 17 and 18) the maximum permissible winding temperature will be reached during continuous operation at 25°C ambient.
= Thermal limit.

Short term operation
The motor may be briefly overloaded (recurring).

Assigned power rating

maxon Modular System

Overview on page 20–25

Recommended Electronics:

ESCON 36/2 DC	Page 342
ESCON Module 50/5	343
ESCON 50/5	344
Notes	**22**

RE 13 ∅13 mm, Graphite Brushes, 3 Watt

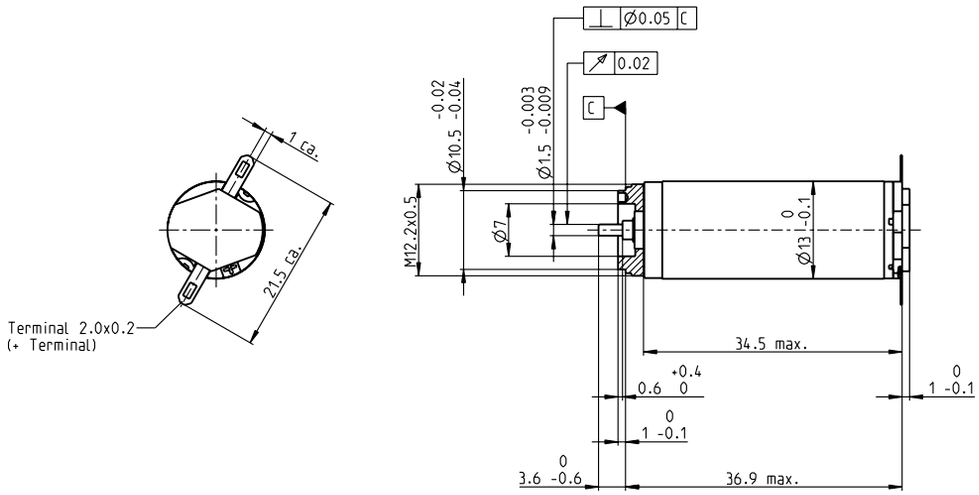

M 1:1

Stock program
Standard program
Special program (on request)

Part Numbers

		118597	118598	118599	118600	118601	118602	118603	118604	118605	118606	118607	118608	118609	118610	118611
Motor Data																
Values at nominal voltage																
1 Nominal voltage	V	3	3.6	3.6	4.8	6	6	7.2	9	10	12	15	18	21	24	30
2 No load speed	rpm	11900	13400	11700	13400	13400	11900	12900	13500	12900	13100	13200	12800	13800	13500	13800
3 No load current	mA	164	160	133	118	93.3	79	73.5	62.5	52.6	44.3	35.9	28.5	27.4	23.2	19.1
4 Nominal speed	rpm	9350	10700	8620	9940	10100	8500	9610	10400	9890	10000	10200	9730	10900	10600	10800
5 Nominal torque (max. continuous torque)	mNm	1.25	1.35	1.62	1.97	2.1	2.22	2.17	2.22	2.38	2.36	2.37	2.42	2.34	2.39	2.34
6 Nominal current (max. continuous current)	A	0.72	0.72	0.72	0.72	0.604	0.559	0.496	0.424	0.384	0.32	0.259	0.213	0.193	0.167	0.134
7 Stall torque	mNm	7.57	8.27	7.23	8.71	9.4	8.5	9.18	10.2	10.7	10.6	10.7	10.5	11.3	11.2	11.1
8 Starting current	A	3.46	3.51	2.69	2.72	2.33	1.87	1.82	1.69	1.52	1.25	1.03	0.814	0.809	0.688	0.556
9 Max. efficiency	%	51	53	53	57	60	60	61	64	65	65	66	66	67	67	67
Characteristics																
10 Terminal resistance	Ω	0.867	1.02	1.34	1.76	2.57	3.21	3.96	5.32	6.6	9.56	14.6	22.1	26	34.9	54
11 Terminal inductance	mH	0.0213	0.0247	0.0323	0.0456	0.0727	0.092	0.114	0.164	0.223	0.316	0.485	0.749	0.87	1.19	1.79
12 Torque constant	mNm/A	2.19	2.36	2.69	3.2	4.04	4.54	5.05	6.06	7.07	8.41	10.4	13	14	16.3	20
13 Speed constant	rpm/V	4370	4050	3550	2990	2370	2100	1890	1580	1350	1140	915	737	684	585	477
14 Speed / torque gradient	rpm/mNm	1730	1760	1770	1640	1510	1480	1480	1390	1260	1290	1280	1260	1270	1250	1290
15 Mechanical time constant	ms	12.3	11	10.1	9.12	8.38	8.17	7.95	7.66	7.48	7.36	7.25	7.17	7.14	7.12	7.12
16 Rotor inertia	gcm^2	0.681	0.596	0.548	0.53	0.53	0.526	0.512	0.528	0.565	0.545	0.541	0.544	0.536	0.543	0.529

Specifications

Thermal data		
17	Thermal resistance housing-ambient	33 K/W
18	Thermal resistance winding-housing	7.0 K/W
19	Thermal time constant winding	4.88 s
20	Thermal time constant motor	93.8 s
21	Ambient temperature	-20…+65°C
22	Max. permissible winding temperature	+85°C
Mechanical data (sleeve bearings)		
23	Max. permissible speed	16000 rpm
24	Axial play	0.05 - 0.15 mm
25	Radial play	0.014 mm
26	Max. axial load (dynamic)	0.8 N
27	Max. force for press fits (static)	15 N
28	Max. radial loading, 5 mm from flange	1.4 N
Other specifications		
29	Number of pole pairs	1
30	Number of commutator segments	7
31	Weight of motor	27 g

Values listed in the table are nominal.
Explanation of the figures on page 79.

Operating Range

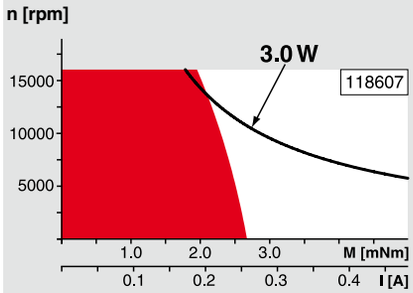

Comments

Continuous operation
In observation of above listed thermal resistance (lines 17 and 18) the maximum permissible winding temperature will be reached during continuous operation at 25°C ambient.
= Thermal limit.

Short term operation
The motor may be briefly overloaded (recurring).

Assigned power rating

maxon Modular System

Overview on page 20–25

Planetary Gearhead
∅13 mm
0.05 - 0.15 Nm
Page 247

Planetary Gearhead
∅13 mm
0.2 - 0.35 Nm
Page 248

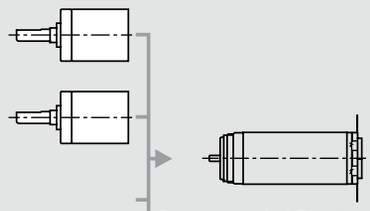

Recommended Electronics:

ESCON 36/2 DC	Page 342
ESCON Module 50/5	343
ESCON 50/5	344
Notes	**22**

RE 13 ∅13 mm, Graphite Brushes, 3 Watt

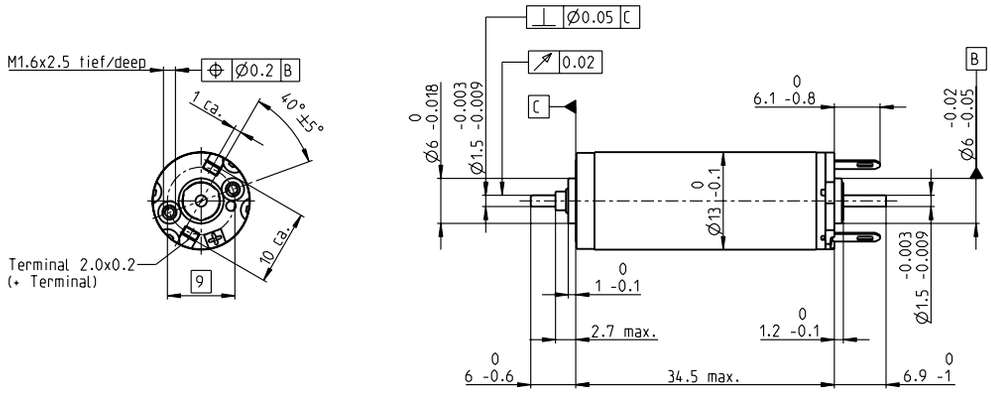

M 1:1

Stock program
Standard program
Special program (on request)

Part Numbers

			118613	118614	118615	118616	118617	118618	118619	118620	118621	118622	118623	118624	118625	118626	118627
Motor Data																	
	Values at nominal voltage																
1	Nominal voltage	V	3	3.6	3.6	4.8	6	6	7.2	9	10	12	15	18	21	24	30
2	No load speed	rpm	11900	13400	11700	13400	13400	11900	12900	13500	12900	13100	13200	12800	13800	13500	13800
3	No load current	mA	164	160	133	118	93.3	79	73.5	62.5	52.6	44.3	35.9	28.5	27.4	23.2	19.1
4	Nominal speed	rpm	9350	10700	8620	9940	10100	8500	9610	10400	9890	10000	10200	9730	10900	10600	10800
5	Nominal torque (max. continuous torque)	mNm	1.25	1.35	1.62	1.97	2.1	2.22	2.17	2.22	2.38	2.36	2.37	2.42	2.34	2.39	2.34
6	Nominal current (max. continuous current)	A	0.72	0.72	0.72	0.72	0.604	0.559	0.496	0.424	0.384	0.32	0.259	0.213	0.193	0.167	0.134
7	Stall torque	mNm	7.57	8.27	7.23	8.71	9.4	8.5	9.18	10.2	10.7	10.6	10.7	10.5	11.3	11.2	11.1
8	Starting current	A	3.46	3.51	2.69	2.72	2.33	1.87	1.82	1.69	1.52	1.25	1.03	0.814	0.809	0.688	0.556
9	Max. efficiency	%	51	53	53	57	60	60	61	64	65	65	66	66	67	67	67
	Characteristics																
10	Terminal resistance	Ω	0.867	1.02	1.34	1.76	2.57	3.21	3.96	5.32	6.6	9.56	14.6	22.1	26	34.9	54
11	Terminal inductance	mH	0.0213	0.0247	0.0323	0.0456	0.0727	0.092	0.114	0.164	0.223	0.316	0.485	0.749	0.87	1.19	1.79
12	Torque constant	mNm/A	2.19	2.36	2.69	3.2	4.04	4.54	5.05	6.06	7.07	8.41	10.4	13	14	16.3	20
13	Speed constant	rpm/V	4370	4050	3550	2990	2370	2100	1890	1580	1350	1140	915	737	684	585	477
14	Speed / torque gradient	rpm/mNm	1730	1760	1770	1640	1510	1480	1480	1390	1260	1290	1280	1260	1270	1250	1290
15	Mechanical time constant	ms	12.3	11	10.1	9.12	8.38	8.17	7.95	7.66	7.48	7.36	7.25	7.17	7.14	7.12	7.12
16	Rotor inertia	gcm²	0.681	0.596	0.548	0.53	0.53	0.526	0.512	0.528	0.565	0.545	0.541	0.544	0.536	0.543	0.529

Specifications

	Thermal data	
17	Thermal resistance housing-ambient	33 K/W
18	Thermal resistance winding-housing	7.0 K/W
19	Thermal time constant winding	4.88 s
20	Thermal time constant motor	93.8 s
21	Ambient temperature	-20…+65°C
22	Max. permissible winding temperature	+85°C
	Mechanical data (sleeve bearings)	
23	Max. permissible speed	16000 rpm
24	Axial play	0.05 - 0.15 mm
25	Radial play	0.014 mm
26	Max. axial load (dynamic)	0.8 N
27	Max. force for press fits (static)	15 N
	(static, shaft supported)	80 N
28	Max. radial loading, 5 mm from flange	1.4 N
	Other specifications	
29	Number of pole pairs	1
30	Number of commutator segments	7
31	Weight of motor	24 g

Values listed in the table are nominal.
Explanation of the figures on page 79.

Operating Range

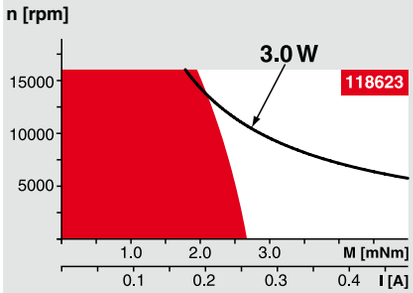

Comments

Continuous operation
In observation of above listed thermal resistance (lines 17 and 18) the maximum permissible winding temperature will be reached during continuous operation at 25°C ambient.
= Thermal limit.

Short term operation
The motor may be briefly overloaded (recurring).

Assigned power rating

maxon Modular System

Overview on page 20–25

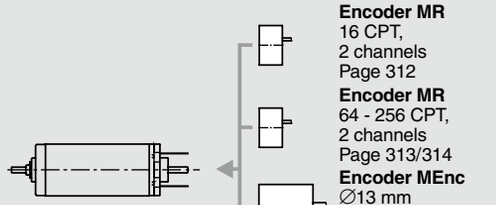

Encoder MR
16 CPT,
2 channels
Page 312

Encoder MR
64 - 256 CPT,
2 channels
Page 313/314

Encoder MEnc
∅13 mm
16 CPT, 2 channels
Page 334

Recommended Electronics:

ESCON 36/2 DC	Page 342
ESCON Module 50/5	343
ESCON 50/5	344
EPOS2 24/2	350
EPOS2 Module 36/2	350
EPOS3 70/10 EtherCAT	357
MAXPOS 50/5	360
Notes	**22**

RE 13 ∅13 mm, Graphite Brushes, 3 Watt

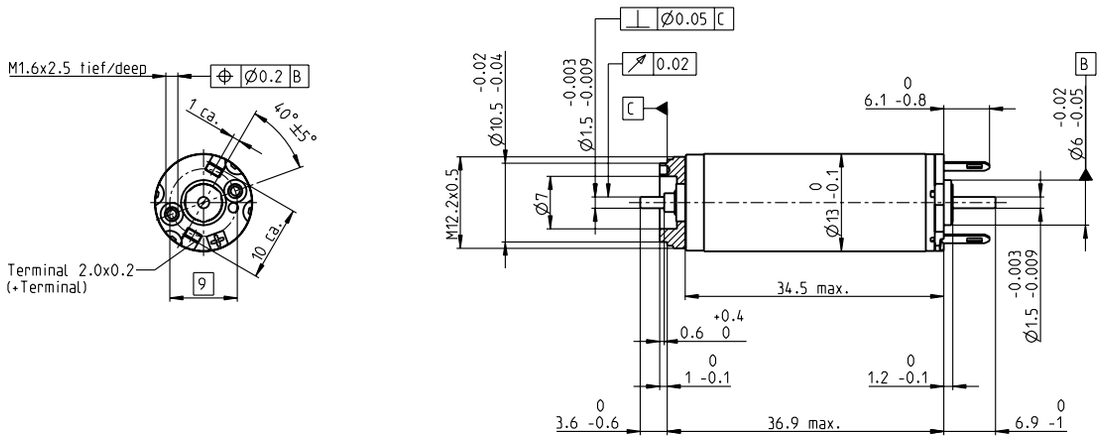

M 1:1

Stock program
Standard program
Special program (on request)

Part Numbers

			118628	118629	118630	118631	118632	118633	118634	118635	118636	118637	118638	118639	118640	118641	118642
Motor Data																	
	Values at nominal voltage																
1	Nominal voltage	V	3	3.6	3.6	4.8	6	6	7.2	9	10	12	15	18	21	24	30
2	No load speed	rpm	11900	13400	11700	13400	13400	11900	12900	13500	12900	13100	13200	12800	13800	13500	13800
3	No load current	mA	164	160	133	118	93.3	79	73.5	62.5	52.6	44.3	35.9	28.5	27.4	23.2	19.1
4	Nominal speed	rpm	9350	10700	8620	9940	10100	8500	9610	10400	9890	10000	10200	9730	10900	10600	10800
5	Nominal torque (max. continuous torque)	mNm	1.25	1.35	1.62	1.97	2.1	2.22	2.17	2.22	2.38	2.36	2.37	2.42	2.34	2.39	2.34
6	Nominal current (max. continuous current)	A	0.72	0.72	0.72	0.72	0.604	0.559	0.496	0.424	0.384	0.32	0.259	0.213	0.193	0.167	0.134
7	Stall torque	mNm	7.57	8.27	7.23	8.71	9.4	8.5	9.18	10.2	10.7	10.6	10.7	10.5	11.3	11.2	11.1
8	Starting current	A	3.46	3.51	2.69	2.72	2.33	1.87	1.82	1.69	1.52	1.25	1.03	0.814	0.809	0.688	0.556
9	Max. efficiency	%	51	53	53	57	60	60	61	64	65	65	66	66	67	67	67
	Characteristics																
10	Terminal resistance	Ω	0.867	1.02	1.34	1.76	2.57	3.21	3.96	5.32	6.6	9.56	14.6	22.1	26	34.9	54
11	Terminal inductance	mH	0.0213	0.0247	0.0323	0.0456	0.0727	0.092	0.114	0.164	0.223	0.316	0.485	0.749	0.87	1.19	1.79
12	Torque constant	mNm/A	2.19	2.36	2.69	3.2	4.04	4.54	5.05	6.06	7.07	8.41	10.4	13	14	16.3	20
13	Speed constant	rpm/V	4370	4050	3550	2990	2370	2100	1890	1580	1350	1140	915	737	684	585	477
14	Speed / torque gradient	rpm/mNm	1730	1760	1770	1640	1510	1480	1480	1390	1260	1290	1280	1260	1270	1250	1290
15	Mechanical time constant	ms	12.3	11	10.1	9.12	8.38	8.17	7.95	7.66	7.48	7.36	7.25	7.17	7.14	7.12	7.12
16	Rotor inertia	gcm^2	0.681	0.596	0.548	0.53	0.53	0.526	0.512	0.528	0.565	0.545	0.541	0.544	0.536	0.543	0.529

Specifications

	Thermal data	
17	Thermal resistance housing-ambient	33 K/W
18	Thermal resistance winding-housing	7.0 K/W
19	Thermal time constant winding	4.88 s
20	Thermal time constant motor	93.6 s
21	Ambient temperature	-20…+65°C
22	Max. permissible winding temperature	+85°C
	Mechanical data (sleeve bearings)	
23	Max. permissible speed	16000 rpm
24	Axial play	0.05 - 0.15 mm
25	Radial play	0.014 mm
26	Max. axial load (dynamic)	0.8 N
27	Max. force for press fits (static)	15 N
	(static, shaft supported)	80 N
28	Max. radial loading, 5 mm from flange	1.4 N
	Other specifications	
29	Number of pole pairs	1
30	Number of commutator segments	7
31	Weight of motor	27 g

Values listed in the table are nominal.
Explanation of the figures on page 79.

Operating Range

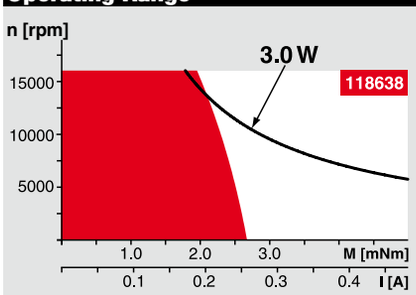

Comments

Continuous operation
In observation of above listed thermal resistance (lines 17 and 18) the maximum permissible winding temperature will be reached during continuous operation at 25°C ambient.
= Thermal limit.

Short term operation
The motor may be briefly overloaded (recurring).

Assigned power rating

maxon Modular System

Overview on page 20–25

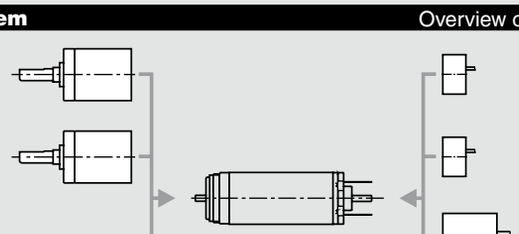

Planetary Gearhead
∅13 mm
0.05 - 0.15 Nm
Page 247

Planetary Gearhead
∅13 mm
0.2 - 0.35 Nm
Page 248

Encoder MR
16 CPT,
2 channels
Page 312

Encoder MR
64 - 256 CPT,
2 channels
Page 313/314

Encoder MEnc
∅13 mm
16 CPT, 2 channels
Page 334

Recommended Electronics:

ESCON 36/2 DC	Page 342
ESCON Module 50/5	343
ESCON 50/5	344
EPOS2 24/2	350
EPOS2 Module 36/2	350
EPOS3 70/10 EtherCAT	357
MAXPOS 50/5	360
Notes	**22**

RE 16 ∅16 mm, Precious Metal Brushes CLL, 2 Watt

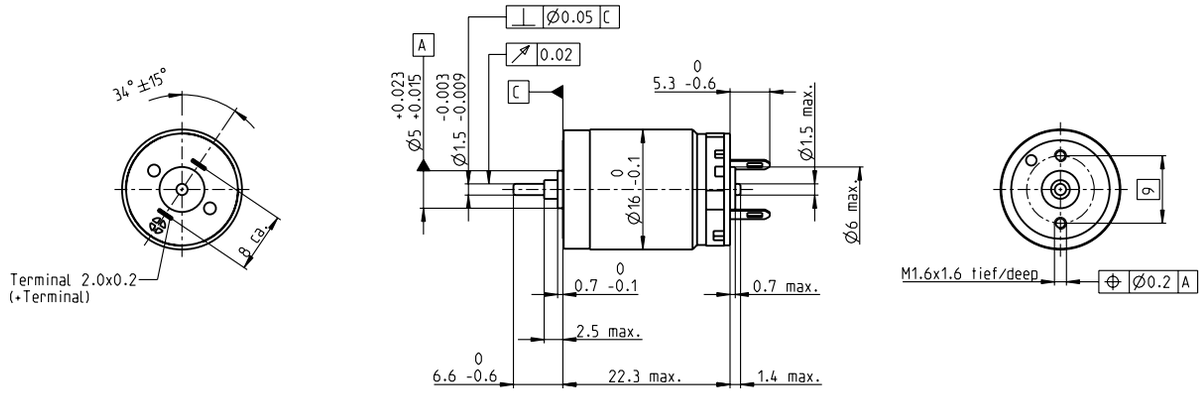

M 1:1

Stock program
Standard program
Special program (on request)

Part Numbers

			320173	320174	320175	320176	320177	320178	320179
Motor Data									
	Values at nominal voltage								
1	Nominal voltage	V	1.8	3	6	9	12	18	24
2	No load speed	rpm	8240	8340	8490	8230	8090	7940	7760
3	No load current	mA	35.1	21.4	11	7.02	5.81	3.35	2.44
4	Nominal speed	rpm	6250	4830	4850	4590	4350	4140	3850
5	Nominal torque (max. continuous torque)	mNm	1.42	2.38	2.38	2.38	2.29	2.28	2.22
6	Nominal current (max. continuous current)	A	0.72	0.72	0.366	0.237	0.169	0.11	0.0783
7	Stall torque	mNm	5.46	5.55	5.55	5.4	5.01	4.81	4.45
8	Starting current	A	2.65	1.64	0.833	0.524	0.359	0.226	0.153
9	Max. efficiency	%	79	79	79	79	77	77	77
	Characteristics								
10	Terminal resistance	Ω	0.679	1.83	7.2	17.2	33.4	79.8	157
11	Terminal inductance	mH	0.0168	0.0456	0.176	0.421	0.77	1.8	3.35
12	Torque constant	mNm/A	2.06	3.39	6.66	10.3	13.9	21.3	29.1
13	Speed constant	rpm/V	4640	2810	1430	927	685	448	328
14	Speed / torque gradient	rpm/mNm	1530	1520	1550	1550	1640	1680	1770
15	Mechanical time constant	ms	10.4	9.97	9.87	9.87	9.98	9.92	10.1
16	Rotor inertia	gcm²	0.65	0.626	0.609	0.61	0.58	0.565	0.546

Specifications

	Thermal data	
17	Thermal resistance housing-ambient	40.6 K/W
18	Thermal resistance winding-housing	9.5 K/W
19	Thermal time constant winding	5.33 s
20	Thermal time constant motor	268 s
21	Ambient temperature	-20…+65°C
22	Max. permissible winding temperature	+85°C
	Mechanical data (sleeve bearings)	
23	Max. permissible speed	11000 rpm
24	Axial play	0.05 - 0.15 mm
25	Radial play	0.014 mm
26	Max. axial load (dynamic)	0.8 N
27	Max. force for press fits (static)	15 N
28	Max. radial loading, 5 mm from flange	1.5 N
	Other specifications	
29	Number of pole pairs	1
30	Number of commutator segments	7
31	Weight of motor	21 g

CLL = Capacitor Long Life

Values listed in the table are nominal.
Explanation of the figures on page 79.

Operating Range

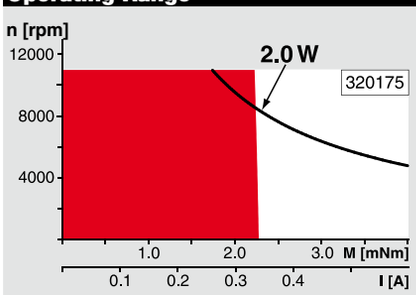

Comments

Continuous operation
In observation of above listed thermal resistance (lines 17 and 18) the maximum permissible winding temperature will be reached during continuous operation at 25°C ambient.
= Thermal limit.

Short term operation
The motor may be briefly overloaded (recurring).

Assigned power rating

maxon Modular System

Overview on page 20–25

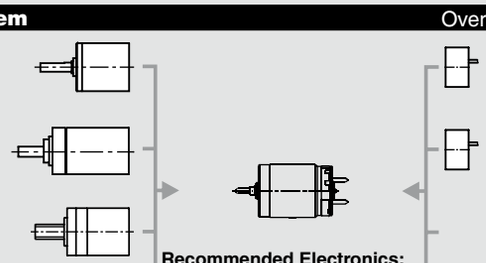

Planetary Gearhead
∅16 mm
0.1 - 0.3 Nm
Page 254

Planetary Gearhead
∅16 mm
0.2 - 0.6 Nm
Page 255

Spindle Drive
∅16 mm
Page 296–298

Encoder MR
32 CPT,
2 / 3 channels
Page 315

Encoder MR
128 / 256 / 512 CPT,
2 / 3 channels
Page 317

Recommended Electronics:

ESCON 36/2 DC	Page 342
ESCON Module 50/5	343
ESCON 50/5	344
EPOS2 24/2	350
EPOS2 Module 36/2	350
EPOS3 70/10 EtherCAT	357
MAXPOS 50/5	360
Notes	**22**

RE 16 ∅16 mm, Precious Metal Brushes CLL, 3.2 Watt

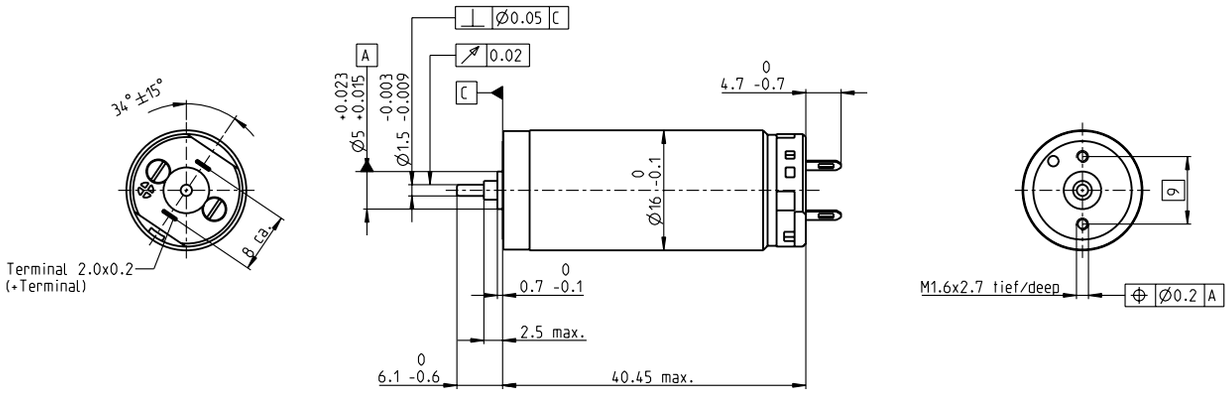

M 1:1

Stock program
Standard program
Special program (on request)

Part Numbers

Motor Data		118678	118679	118680	118681	118682	118683	118684	118685	118686	118687	118688	118689	118690	118691	118692
Values at nominal voltage																
1 Nominal voltage	V	1.8	2.4	3	3.2	4.5	4.8	7.2	9	12	12	15	18	24	30	48
2 No load speed	rpm	4990	6360	6890	6270	6740	5700	6890	6740	7130	5990	6010	5900	7250	6460	5500
3 No load current	mA	23.5	25.4	23	18.6	14.8	10.8	9.57	7.4	6.05	4.63	3.72	3.02	3.11	2.08	1.02
4 Nominal speed	rpm	4320	5510	5820	4930	5050	3630	4810	4630	5030	3830	3840	3730	5070	4220	3180
5 Nominal torque (max. continuous torque)	mNm	2.39	2.5	2.89	3.41	4.48	5.61	5.54	5.48	5.48	5.38	5.36	5.33	5.29	5.18	5.01
6 Nominal current (max. continuous current)	A	0.72	0.72	0.72	0.72	0.72	0.711	0.566	0.438	0.348	0.287	0.229	0.187	0.171	0.119	0.0614
7 Stall torque	mNm	15.5	16.9	17.3	15.2	17.4	15.2	18.1	17.4	18.6	14.9	14.9	14.5	17.6	15	11.9
8 Starting current	A	4.53	4.71	4.19	3.13	2.74	1.9	1.82	1.37	1.16	0.784	0.628	0.5	0.561	0.341	0.144
9 Max. efficiency	%	86	86	86	85	86	86	86	86	86	86	85	85	86	85	84
Characteristics																
10 Terminal resistance	Ω	0.397	0.51	0.715	1.02	1.64	2.53	3.95	6.56	10.3	15.3	23.9	36	42.8	88	333
11 Terminal inductance	mH	0.0207	0.0227	0.0302	0.0415	0.0711	0.113	0.174	0.284	0.452	0.639	0.993	1.48	1.75	3.44	12.1
12 Torque constant	mNm/A	3.43	3.58	4.13	4.84	6.34	7.99	9.92	12.7	16	19	23.7	28.9	31.4	44.1	82.7
13 Speed constant	rpm/V	2790	2660	2310	1970	1510	1190	962	753	597	502	403	330	304	217	115
14 Speed / torque gradient	rpm/mNm	323	379	400	415	391	378	383	389	386	404	406	410	414	432	465
15 Mechanical time constant	ms	5.84	5.71	5.56	5.46	5.36	5.31	5.29	5.29	5.27	5.29	5.3	5.31	5.31	5.36	5.42
16 Rotor inertia	gcm^2	1.73	1.44	1.33	1.26	1.31	1.34	1.32	1.3	1.3	1.25	1.25	1.24	1.23	1.18	1.11

Specifications

	Thermal data	
17	Thermal resistance housing-ambient	30 K/W
18	Thermal resistance winding-housing	8.5 K/W
19	Thermal time constant winding	10.6 s
20	Thermal time constant motor	436 s
21	Ambient temperature	-20…+65°C
22	Max. permissible winding temperature	+85°C
	Mechanical data (sleeve bearings)	
23	Max. permissible speed	11 000 rpm
24	Axial play	0.05 - 0.15 mm
25	Radial play	0.014 mm
26	Max. axial load (dynamic)	0.8 N
27	Max. force for press fits (static)	15 N
28	Max. radial loading, 5 mm from flange	1.5 N
	Other specifications	
29	Number of pole pairs	1
30	Number of commutator segments	7
31	Weight of motor	38 g

CLL = Capacitor Long Life

Values listed in the table are nominal.
Explanation of the figures on page 79.

Operating Range

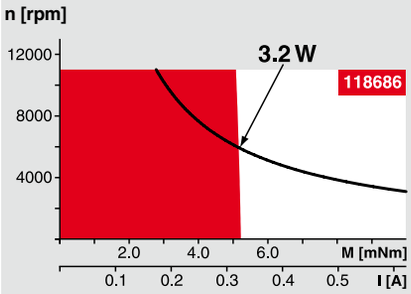

Comments

Continuous operation
In observation of above listed thermal resistance (lines 17 and 18) the maximum permissible winding temperature will be reached during continuous operation at 25°C ambient.
= Thermal limit.

Short term operation
The motor may be briefly overloaded (recurring).

Assigned power rating

maxon Modular System

Overview on page 20–25

Planetary Gearhead
∅16 mm
0.1 - 0.3 Nm
Page 254

Planetary Gearhead
∅16 mm
0.2 - 0.6 Nm
Page 255

Spindle Drive
∅16 mm
Page 296–298

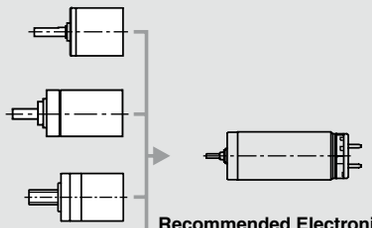

Recommended Electronics:

ESCON 36/2 DC	Page 342
ESCON Module 50/5	343
ESCON 50/5	344
Notes	**22**

RE 16 ∅16 mm, Precious Metal Brushes CLL, 3.2 Watt

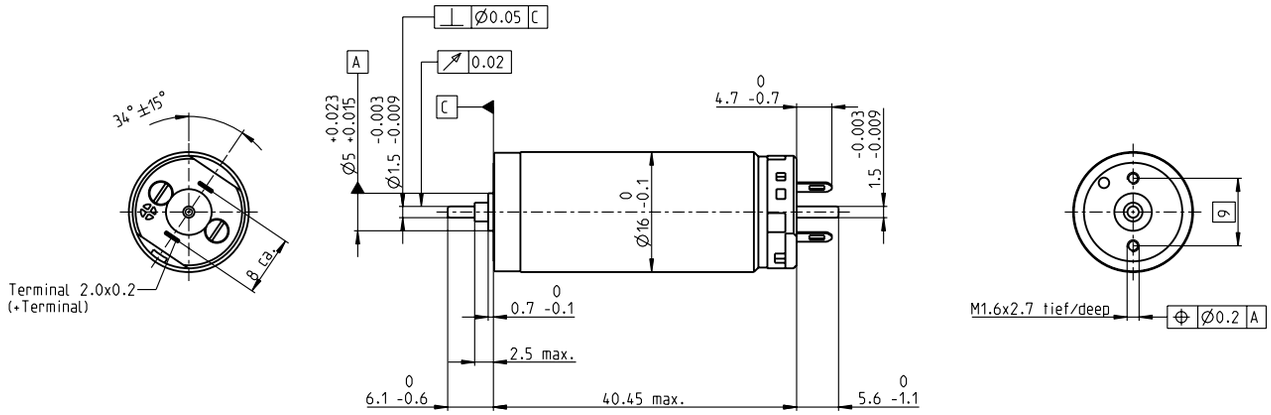

M 1:1

Stock program
Standard program
Special program (on request)

Part Numbers

		118693	118694	118695	118696	118697	118698	118699	118700	118701	118702	118703	118704	118705	118706	118707
Motor Data																
Values at nominal voltage																
1 Nominal voltage	V	1.8	2.4	3	3.2	4.5	4.8	7.2	9	12	12	15	18	24	30	48
2 No load speed	rpm	4990	6360	6890	6270	6740	5700	6890	6740	7130	5990	6010	5900	7250	6460	5500
3 No load current	mA	23.5	25.4	23	18.6	14.8	10.8	9.57	7.4	6.05	4.63	3.72	3.02	3.11	2.08	1.02
4 Nominal speed	rpm	4320	5510	5820	4930	5050	3630	4810	4630	5030	3830	3840	3730	5070	4220	3180
5 Nominal torque (max. continuous torque)	mNm	2.39	2.5	2.89	3.41	4.48	5.61	5.54	5.48	5.48	5.38	5.36	5.33	5.29	5.18	5.01
6 Nominal current (max. continuous current)	A	0.72	0.72	0.72	0.72	0.72	0.711	0.566	0.438	0.348	0.287	0.229	0.187	0.171	0.119	0.0614
7 Stall torque	mNm	15.5	16.9	17.3	15.2	17.4	15.2	18.1	17.4	18.6	14.9	14.9	14.5	17.6	15	11.9
8 Starting current	A	4.53	4.71	4.19	3.13	2.74	1.9	1.82	1.37	1.16	0.784	0.628	0.5	0.561	0.341	0.144
9 Max. efficiency	%	86	86	86	85	86	86	86	86	86	86	85	85	86	85	84
Characteristics																
10 Terminal resistance	Ω	0.397	0.51	0.715	1.02	1.64	2.53	3.95	6.56	10.3	15.3	23.9	36	42.8	88	333
11 Terminal inductance	mH	0.0207	0.0227	0.0302	0.0415	0.0711	0.113	0.174	0.284	0.452	0.639	0.993	1.48	1.75	3.44	12.1
12 Torque constant	mNm/A	3.43	3.58	4.13	4.84	6.34	7.99	9.92	12.7	16	19	23.7	28.9	31.4	44.1	82.7
13 Speed constant	rpm/V	2790	2660	2310	1970	1510	1190	962	753	597	502	403	330	304	217	115
14 Speed / torque gradient	rpm/mNm	323	379	400	415	391	378	383	389	386	404	406	410	414	432	465
15 Mechanical time constant	ms	5.84	5.71	5.56	5.46	5.36	5.31	5.29	5.29	5.27	5.29	5.3	5.31	5.31	5.36	5.42
16 Rotor inertia	gcm²	1.73	1.44	1.33	1.26	1.31	1.34	1.32	1.3	1.3	1.25	1.25	1.24	1.23	1.18	1.11

Specifications

Thermal data	
17 Thermal resistance housing-ambient	30 K/W
18 Thermal resistance winding-housing	8.5 K/W
19 Thermal time constant winding	10.6 s
20 Thermal time constant motor	436 s
21 Ambient temperature	-20…+65°C
22 Max. permissible winding temperature	+85°C
Mechanical data (sleeve bearings)	
23 Max. permissible speed	11000 rpm
24 Axial play	0.05 - 0.15 mm
25 Radial play	0.014 mm
26 Max. axial load (dynamic)	0.8 N
27 Max. force for press fits (static)	15 N
(static, shaft supported)	70 N
28 Max. radial loading, 5 mm from flange	1.5 N
Other specifications	
29 Number of pole pairs	1
30 Number of commutator segments	7
31 Weight of motor	38 g

CLL = Capacitor Long Life

Values listed in the table are nominal.
Explanation of the figures on page 79.

Operating Range

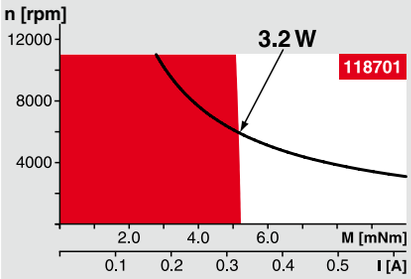

Comments

Continuous operation
In observation of above listed thermal resistance (lines 17 and 18) the maximum permissible winding temperature will be reached during continuous operation at 25°C ambient.
= Thermal limit.

Short term operation
The motor may be briefly overloaded (recurring).

Assigned power rating

maxon Modular System

Overview on page 20–25

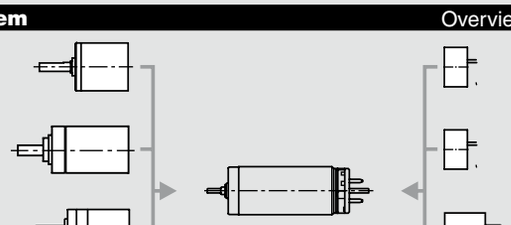

Planetary Gearhead
∅16 mm
0.1 - 0.3 Nm
Page 254

Planetary Gearhead
∅16 mm
0.2 - 0.6 Nm
Page 255

Spindle Drive
∅16 mm
Page 296–298

Recommended Electronics:

ESCON 36/2 DC	Page 342
ESCON Module 50/5	343
ESCON 50/5	344
EPOS2 24/2	350
EPOS2 Module 36/2	350
EPOS3 70/10 EtherCAT	357
MAXPOS 50/5	360
Notes	**22**

Encoder MR
32 CPT,
2 / 3 channels
Page 315

Encoder MR
128 / 256 / 512 CPT,
2 / 3 channels
Page 317

Encoder MEnc
∅13 mm
16 CPT, 2 channels
Page 334

RE 16 ∅16 mm, Graphite Brushes, 4.5 Watt

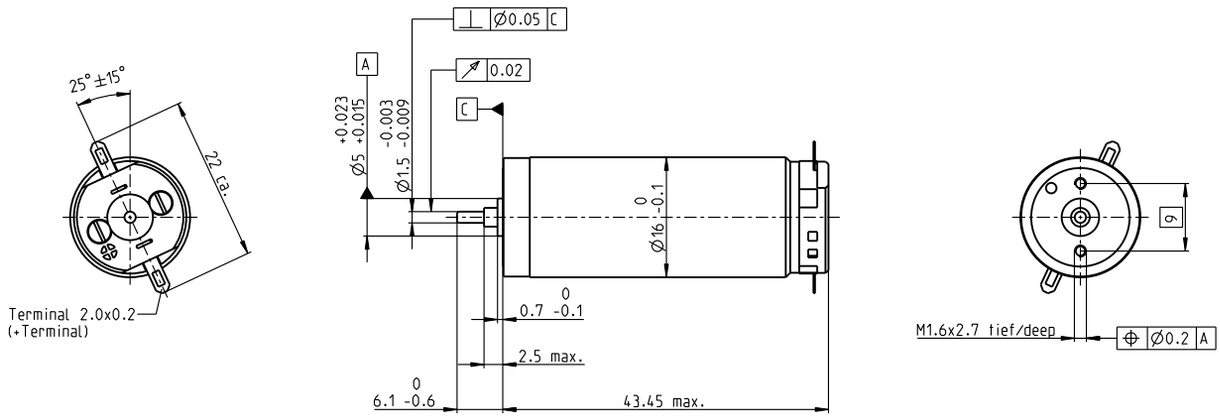

M 1:1

Stock program
Standard program
Special program (on request)

Part Numbers

			118710	118711	118712	118713	118714	118715	118716	118717	118718	118719	118720	118721	118722	118723	118724
Motor Data																	
	Values at nominal voltage																
1	Nominal voltage	V	4.8	4.8	6	7.2	9	12	15	18	24	30	36	45	48	48	48
2	No load speed	rpm	12700	12100	13200	13600	13100	13900	14000	13200	14000	14700	14100	14500	14200	10100	5320
3	No load current	mA	105	98.7	87.6	75.4	56.9	45.9	37.1	28.5	23	19.6	15.6	12.8	11.8	7.66	3.63
4	Nominal speed	rpm	11200	10500	11500	11700	11000	12000	12200	11300	12200	12900	12300	12700	12400	8130	3170
5	Nominal torque (max. continuous torque)	mNm	2.15	2.27	2.67	3.18	4.09	4.26	4.34	4.48	4.5	4.37	4.44	4.41	4.42	4.65	4.77
6	Nominal current (max. continuous current)	A	0.72	0.72	0.72	0.72	0.69	0.569	0.467	0.375	0.299	0.245	0.199	0.162	0.15	0.111	0.0603
7	Stall torque	mNm	26.3	22.7	25.8	27.3	29.9	34.3	35.3	33.4	36.3	36.8	35.6	36.2	35.4	24.2	12.1
8	Starting current	A	7.56	6.26	6.16	5.56	4.65	4.23	3.51	2.6	2.24	1.91	1.48	1.23	1.11	0.541	0.144
9	Max. efficiency	%	69	69	72	73	76	78	79	79	80	80	80	81	80	78	71
	Characteristics																
10	Terminal resistance	Ω	0.635	0.767	0.975	1.29	1.94	2.83	4.28	6.93	10.7	15.7	24.4	36.5	43.3	88.7	334
11	Terminal inductance	mH	0.0208	0.0227	0.0303	0.0415	0.0711	0.113	0.174	0.285	0.452	0.64	0.994	1.48	1.75	3.44	12.1
12	Torque constant	mNm/A	3.48	3.64	4.2	4.91	6.43	8.11	10.1	12.9	16.2	19.3	24.1	29.4	31.9	44.8	83.9
13	Speed constant	rpm/V	2750	2630	2280	1940	1480	1180	948	742	589	495	397	325	299	213	114
14	Speed / torque gradient	rpm/mNm	502	554	529	511	447	411	403	399	389	403	402	404	407	423	453
15	Mechanical time constant	ms	9.07	8.35	7.36	6.71	6.13	5.78	5.56	5.43	5.31	5.28	5.25	5.23	5.22	5.24	5.28
16	Rotor inertia	gcm^2	1.73	1.44	1.33	1.26	1.31	1.34	1.32	1.3	1.3	1.25	1.25	1.24	1.23	1.18	1.11

Specifications

	Thermal data	
17	Thermal resistance housing-ambient	30 K/W
18	Thermal resistance winding-housing	8.5 K/W
19	Thermal time constant winding	10.6 s
20	Thermal time constant motor	459 s
21	Ambient temperature	-20…+65°C
22	Max. permissible winding temperature	+85°C
	Mechanical data (sleeve bearings)	
23	Max. permissible speed	16000 rpm
24	Axial play	0.05 - 0.15 mm
25	Radial play	0.014 mm
26	Max. axial load (dynamic)	0.8 N
27	Max. force for press fits (static)	15 N
28	Max. radial loading, 5 mm from flange	1.5 N
	Other specifications	
29	Number of pole pairs	1
30	Number of commutator segments	7
31	Weight of motor	40 g

Values listed in the table are nominal.
Explanation of the figures on page 79.

Operating Range

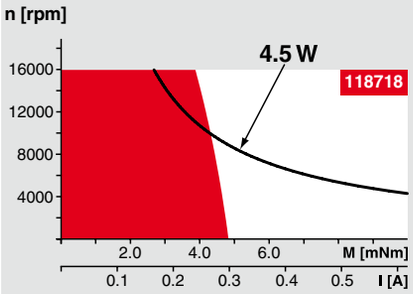

Comments

Continuous operation
In observation of above listed thermal resistance (lines 17 and 18) the maximum permissible winding temperature will be reached during continuous operation at 25°C ambient.
= Thermal limit.

Short term operation
The motor may be briefly overloaded (recurring).

Assigned power rating

maxon Modular System

Overview on page 20–25

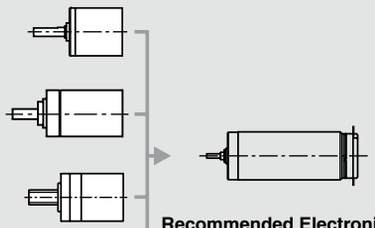

Planetary Gearhead
∅16 mm
0.1 - 0.3 Nm
Page 254

Planetary Gearhead
∅16 mm
0.2 - 0.6 Nm
Page 255

Spindle Drive
∅16 mm
Page 296–298

Recommended Electronics:

ESCON 36/2 DC	Page 342
ESCON Module 50/5	343
ESCON 50/5	344
Notes	**22**

RE 16 ∅16 mm, Graphite Brushes, 4.5 Watt

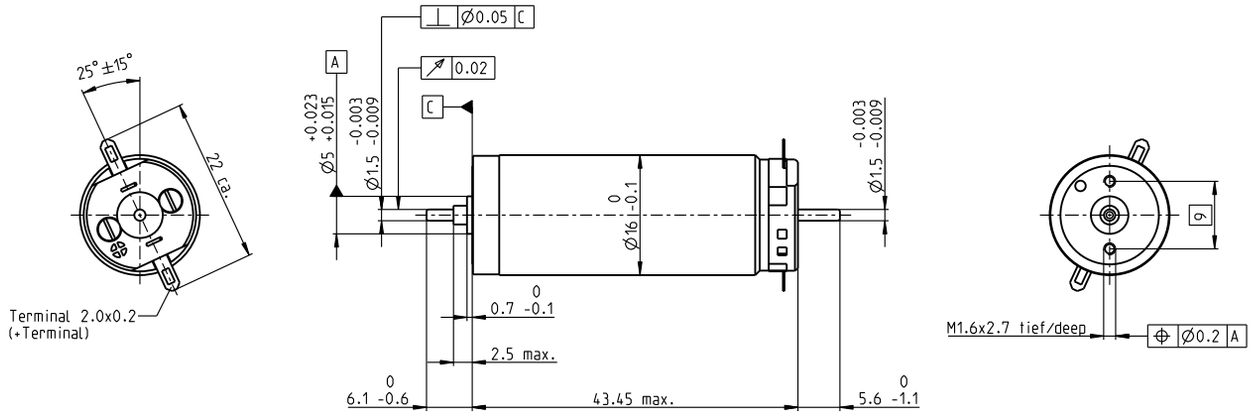

M 1:1

Stock program
Standard program
Special program (on request)

Part Numbers

			118725	118726	118727	118728	118729	118730	118731	118732	118733	118734	118735	118736	118737	118738	118739
Motor Data																	
	Values at nominal voltage																
1	Nominal voltage	V	4.8	4.8	6	7.2	9	12	15	18	24	30	36	45	48	48	48
2	No load speed	rpm	12700	12100	13200	13600	13100	13900	14000	13200	14000	14700	14100	14500	14200	10100	5320
3	No load current	mA	105	98.7	87.6	75.4	56.9	45.9	37.1	28.5	23	19.6	15.6	12.8	11.8	7.66	3.63
4	Nominal speed	rpm	11200	10500	11500	11700	11000	12000	12200	11300	12200	12900	12300	12700	12400	8130	3170
5	Nominal torque (max. continuous torque)	mNm	2.15	2.27	2.67	3.18	4.09	4.26	4.34	4.48	4.5	4.37	4.44	4.41	4.42	4.65	4.77
6	Nominal current (max. continuous current)	A	0.72	0.72	0.72	0.72	0.69	0.569	0.467	0.375	0.299	0.245	0.199	0.162	0.15	0.111	0.0603
7	Stall torque	mNm	26.3	22.7	25.8	27.3	29.9	34.3	35.3	33.4	36.3	36.8	35.6	36.2	35.4	24.2	12.1
8	Starting current	A	7.56	6.26	6.16	5.56	4.65	4.23	3.51	2.6	2.24	1.91	1.48	1.23	1.11	0.541	0.144
9	Max. efficiency	%	69	69	72	73	76	78	79	79	80	80	80	81	80	78	71
	Characteristics																
10	Terminal resistance	Ω	0.635	0.767	0.975	1.29	1.94	2.83	4.28	6.93	10.7	15.7	24.4	36.5	43.3	88.7	334
11	Terminal inductance	mH	0.0208	0.0227	0.0303	0.0415	0.0711	0.113	0.174	0.285	0.452	0.64	0.994	1.48	1.75	3.44	12.1
12	Torque constant	mNm/A	3.48	3.64	4.2	4.91	6.43	8.11	10.1	12.9	16.2	19.3	24.1	29.4	31.9	44.8	83.9
13	Speed constant	rpm/V	2750	2630	2280	1940	1480	1180	948	742	589	495	397	325	299	213	114
14	Speed / torque gradient	rpm/mNm	502	554	529	511	447	411	403	399	389	403	402	404	407	423	453
15	Mechanical time constant	ms	9.07	8.35	7.36	6.71	6.13	5.78	5.56	5.43	5.31	5.28	5.25	5.23	5.22	5.24	5.28
16	Rotor inertia	gcm²	1.73	1.44	1.33	1.26	1.31	1.34	1.32	1.3	1.3	1.25	1.25	1.24	1.23	1.18	1.11

Specifications

	Thermal data	
17	Thermal resistance housing-ambient	30 K/W
18	Thermal resistance winding-housing	8.5 K/W
19	Thermal time constant winding	10.6 s
20	Thermal time constant motor	459 s
21	Ambient temperature	-20…+65°C
22	Max. permissible winding temperature	+85°C
	Mechanical data (sleeve bearings)	
23	Max. permissible speed	16000 rpm
24	Axial play	0.05 - 0.15 mm
25	Radial play	0.014 mm
26	Max. axial load (dynamic)	0.8 N
27	Max. force for press fits (static)	15 N
	(static, shaft supported)	60 N
28	Max. radial loading, 5 mm from flange	1.5 N
	Other specifications	
29	Number of pole pairs	1
30	Number of commutator segments	7
31	Weight of motor	40 g

Values listed in the table are nominal.
Explanation of the figures on page 79.

Operating Range

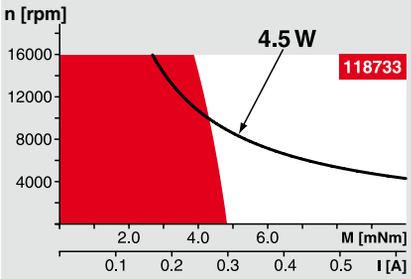

Comments

Continuous operation
In observation of above listed thermal resistance (lines 17 and 18) the maximum permissible winding temperature will be reached during continuous operation at 25°C ambient.
= Thermal limit.

Short term operation
The motor may be briefly overloaded (recurring).

Assigned power rating

maxon Modular System

Overview on page 20–25

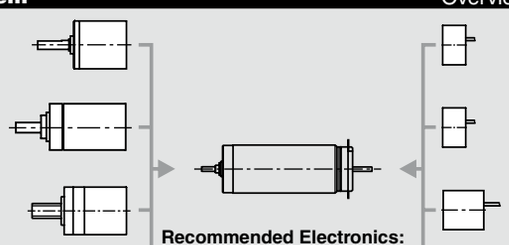

Planetary Gearhead
∅16 mm
0.1 - 0.3 Nm
Page 254

Planetary Gearhead
∅16 mm
0.2 - 0.6 Nm
Page 255

Spindle Drive
∅16 mm
Page 296–298

Recommended Electronics:

ESCON 36/2 DC	Page 342
ESCON Module 50/5	343
ESCON 50/5	344
EPOS2 24/2	350
EPOS2 Module 36/2	350
EPOS3 70/10 EtherCAT	357
MAXPOS 50/5	360
Notes	**22**

Encoder MR
32 CPT,
2 / 3 channels
Page 315

Encoder MR
128 / 256 / 512 CPT,
2 / 3 channels
Page 317

Encoder MEnc
∅13 mm
16 CPT, 2 channels
Page 334

RE 25 ∅25 mm, Precious Metal Brushes CLL, 10 Watt

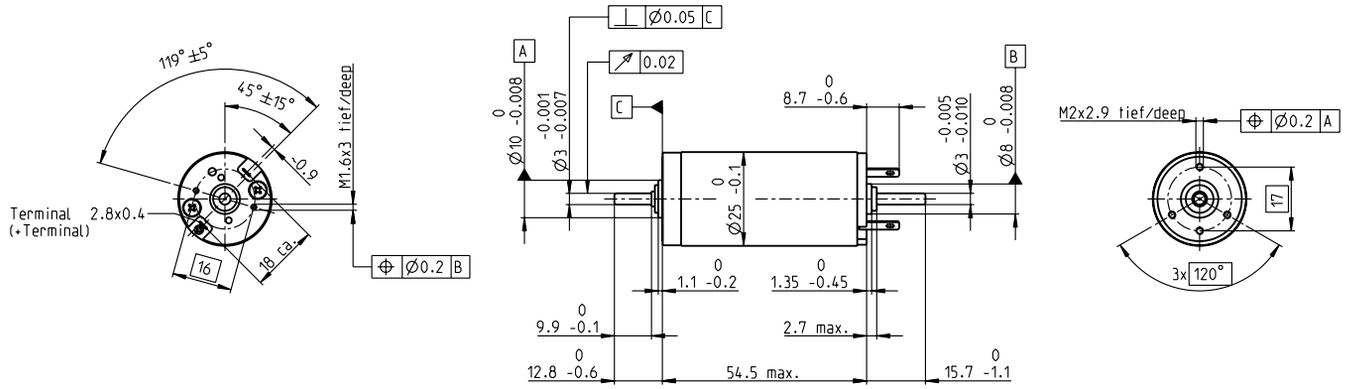

M 1:2

Stock program
Standard program
Special program (on request)

Part Numbers

Motor Data		118740	118741	118742	118743	118744	118745	118746	118747	118748
Values at nominal voltage										
1 Nominal voltage	V	4.5	8	9	12	15	18	24	32	48
2 No load speed	rpm	5360	5320	5230	4850	4980	4790	5190	5510	5070
3 No load current	mA	79.7	44.4	38.7	26.3	21.8	9.88	14.4	11.7	6.96
4 Nominal speed	rpm	4980	4520	4220	3800	3920	3710	4130	4450	4000
5 Nominal torque (max. continuous torque)	mNm	11.4	20.9	23.9	28.6	28.2	28.7	28	27.9	27.9
6 Nominal current (max. continuous current)	A	1.5	1.5	1.5	1.24	1.01	0.811	0.652	0.516	0.317
7 Stall torque	mNm	131	132	119	129	131	126	136	144	132
8 Starting current	A	16.5	9.23	7.31	5.5	4.57	3.52	3.1	2.61	1.47
9 Max. efficiency	%	87	87	86	87	87	90	87	87	87
Characteristics										
10 Terminal resistance	Ω	0.273	0.867	1.23	2.18	3.28	5.11	7.73	12.3	32.6
11 Terminal inductance	mH	0.0275	0.0882	0.115	0.238	0.353	0.551	0.832	1.31	3.48
12 Torque constant	mNm/A	7.99	14.3	16.3	23.5	28.6	35.8	43.9	55.2	89.9
13 Speed constant	rpm/V	1200	668	584	406	334	267	217	173	106
14 Speed / torque gradient	rpm/mNm	40.9	40.5	44	37.7	38.3	38.2	38.3	38.5	38.6
15 Mechanical time constant	ms	4.99	4.4	4.37	4.25	4.23	4.22	4.22	4.22	4.23
16 Rotor inertia	gcm²	11.7	10.4	9.49	10.8	10.6	10.6	10.5	10.5	10.5

Specifications

	Thermal data	
17	Thermal resistance housing-ambient	14 K/W
18	Thermal resistance winding-housing	3.1 K/W
19	Thermal time constant winding s	12.5 s
20	Thermal time constant motor	612 s
21	Ambient temperature	-20…+85°C
22	Max. permissible winding temperature	+100°C
	Mechanical data (ball bearings)	
23	Max. permissible speed	5500 rpm
24	Axial play	0.05 - 0.15 mm
25	Radial play	0.025 mm
26	Max. axial load (dynamic)	3.2 N
27	Max. force for press fits (static)	64 N
	(static, shaft supported)	800 N
28	Max. radial loading, 5 mm from flange	16 N
	Other specifications	
29	Number of pole pairs	1
30	Number of commutator segments	11
31	Weight of motor	130 g

CLL = Capacitor Long Life

Values listed in the table are nominal.
Explanation of the figures on page 79.

Option
Preloaded ball bearings

Operating Range

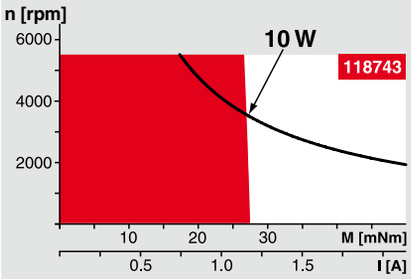

Comments

Continuous operation
In observation of above listed thermal resistance (lines 17 and 18) the maximum permissible winding temperature will be reached during continuous operation at 25°C ambient.
= Thermal limit.

Short term operation
The motor may be briefly overloaded (recurring).

Assigned power rating

maxon Modular System

Overview on page 20–25

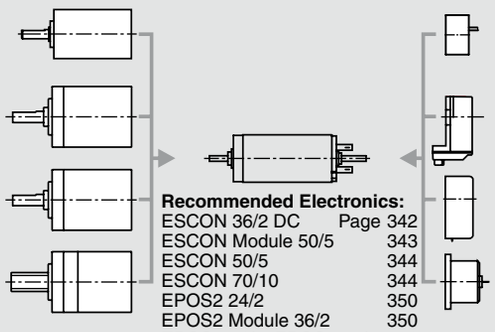

Planetary Gearhead
∅26 mm
0.75 - 4.5 Nm
Page 270

Planetary Gearhead
∅32 mm
0.75 - 6.0 Nm
Page 272/273/276

Koaxdrive
∅32 mm
1.0 - 4.5 Nm
Page 281

Spindle Drive
∅32 mm
Page 301–303

Recommended Electronics:

ESCON 36/2 DC	Page 342
ESCON Module 50/5	343
ESCON 50/5	344
ESCON 70/10	344
EPOS2 24/2	350
EPOS2 Module 36/2	350
EPOS2 24/5, EPOS2 50/5	351
EPOS2 P 24/5	354
EPOS3 70/10 EtherCAT	357
MAXPOS 50/5	360
Notes	**22**

Encoder MR
128 - 1000 CPT,
3 channels
Page 319

Encoder Enc
22 mm
100 CPT, 2 channels
Page 324

Encoder HED_ 5540
500 CPT,
3 channels
Page 325/327

DC-Tacho DCT
∅22 mm
0.52 V
Page 336

RE 25 ∅25 mm, Graphite Brushes, 20 Watt

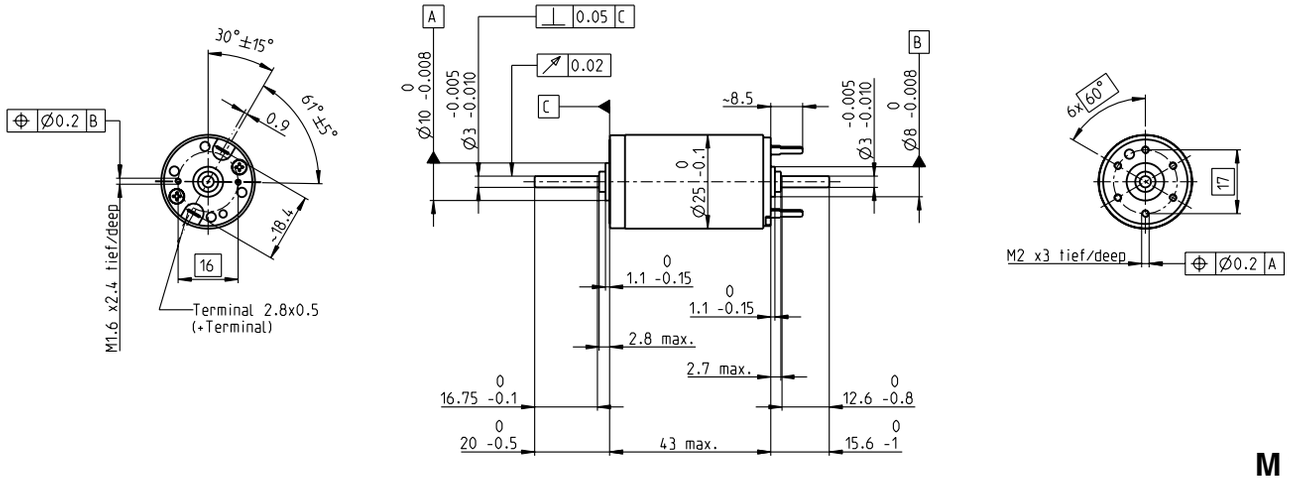

M 1:2

Stock program
Standard program
Special program (on request)

Part Numbers

			302534	339149	339150	339151	339152	339153	339154	339155	339156	339157	339158
Motor Data													
	Values at nominal voltage												
1	Nominal voltage	V	7.2	9	12	18	24	30	36	48	48	48	48
2	No load speed	rpm	10500	9710	9620	10400	10900	9210	10100	9540	8450	6720	4650
3	No load current	mA	133	93.2	68.1	50.6	40.2	25	23.7	16.4	13.7	9.89	6
4	Nominal speed	rpm	8970	8260	8310	9190	9690	8010	8860	8360	7270	5530	3430
5	Nominal torque (max. continuous torque)	mNm	21.9	24.4	27.5	29.1	30.4	31.4	30.7	31.7	32.3	32.9	32.8
6	Nominal current (max. continuous current)	A	3.68	2.97	2.45	1.85	1.5	1.04	0.931	0.68	0.614	0.495	0.341
7	Stall torque	mNm	259	238	268	297	325	265	279	270	243	192	127
8	Starting current	A	42.1	28.1	23.2	18.4	15.6	8.61	8.24	5.67	4.51	2.84	1.3
9	Max. efficiency	%	79	81	84	86	88	88	88	89	89	88	86
	Characteristics												
10	Terminal resistance	Ω	0.171	0.32	0.517	0.98	1.53	3.49	4.37	8.47	10.6	16.9	36.8
11	Terminal inductance	mH	0.0163	0.0308	0.0573	0.112	0.186	0.407	0.493	0.979	1.25	1.97	4.11
12	Torque constant	mNm/A	6.15	8.46	11.5	16.1	20.8	30.8	33.8	47.7	53.8	67.7	97.6
13	Speed constant	rpm/V	1550	1130	828	591	460	311	282	200	177	141	97.8
14	Speed / torque gradient	rpm/mNm	43.2	42.8	37.1	35.9	34	35.2	36.5	35.6	35.1	35.2	36.9
15	Mechanical time constant	ms	6.52	6.06	5.62	5.36	5.24	5.17	5.16	5.13	5.12	5.12	5.14
16	Rotor inertia	gcm²	14.4	13.5	14.5	14.3	14.7	14	13.5	13.8	13.9	13.9	13.3

Specifications

	Thermal data	
17	Thermal resistance housing-ambient	14.4 K/W
18	Thermal resistance winding-housing	5.1 K/W
19	Thermal time constant winding	27.7 s
20	Thermal time constant motor	543 s
21	Ambient temperature	-30…+100°C
22	Max. permissible winding temperature	+155°C
	Mechanical data (ball bearings)	
23	Max. permissible speed	14000 rpm
24	Axial play	0.05 - 0.15 mm
25	Radial play	0.025 mm
26	Max. axial load (dynamic)	3.2 N
27	Max. force for press fits (static)	60 N
	(static, shaft supported)	1000 N
28	Max. radial loading, 5 mm from flange	16 N
	Other specifications	
29	Number of pole pairs	1
30	Number of commutator segments	11
31	Weight of motor	115 g

Values listed in the table are nominal.
Explanation of the figures on page 79.

Option
Encoder MR on request
Encoder HED_ 5540 on request

Operating Range

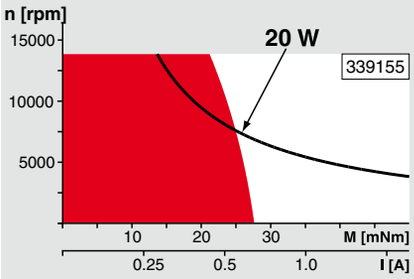

Comments

Continuous operation
In observation of above listed thermal resistance (lines 17 and 18) the maximum permissible winding temperature will be reached during continuous operation at 25°C ambient.
= Thermal limit.

Short term operation
The motor may be briefly overloaded (recurring).

Assigned power rating

maxon Modular System

Overview on page 20–25

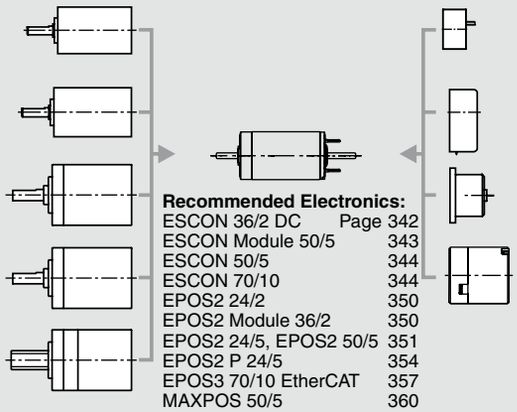

Planetary Gearhead
∅22 mm
0.5 Nm
Page 263

Planetary Gearhead
∅26 mm
0.75 - 4.5 Nm
Page 270

Planetary Gearhead
∅32 mm
0.75 - 6.0 Nm
Page 272/273/276

Koaxdrive
∅32 mm
1.0 - 4.5 Nm
Page 281

Spindle Drive
∅32 mm
Page 301–303

Recommended Electronics:

ESCON 36/2 DC	Page 342
ESCON Module 50/5	343
ESCON 50/5	344
ESCON 70/10	344
EPOS2 24/2	350
EPOS2 Module 36/2	350
EPOS2 24/5, EPOS2 50/5	351
EPOS2 P 24/5	354
EPOS3 70/10 EtherCAT	357
MAXPOS 50/5	360
Notes	**22**

Encoder MR
128 - 1000 CPT,
3 channels
Page 319

Encoder HED_ 5540
500 CPT,
3 channels
Page 326/329

DC-Tacho DCT
∅22 mm
0.52 V
Page 336

Brake AB 28
24 VDC
0.4 Nm
Page 372

RE 25 ∅25 mm, Graphite Brushes, 20 Watt

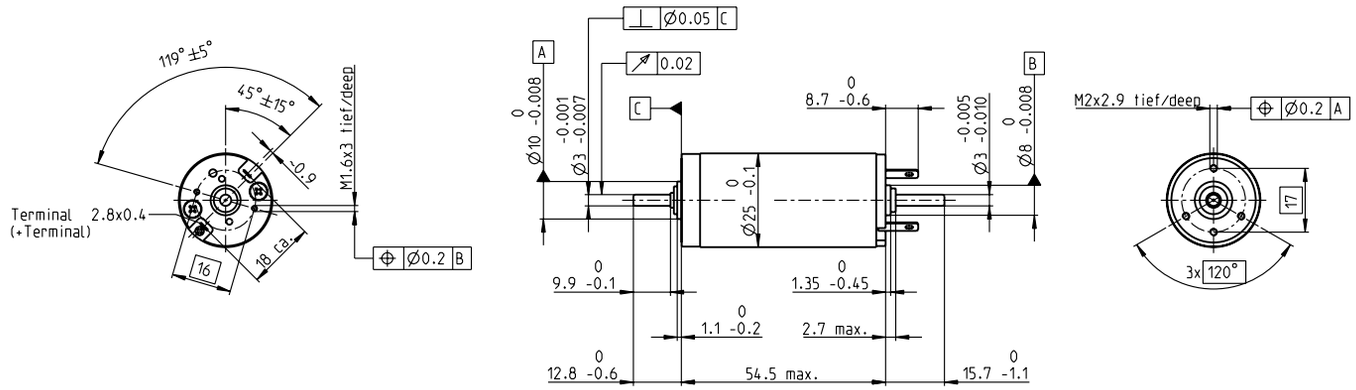

M 1:2

Stock program
Standard program
Special program (on request)

Part Numbers

according to dimensional drawing		118749	118750	118751	118752	118753	118754	118755	118756	118757
shaft length 15.7 shortened to 4 mm		302002	302003	302004	302005	302006	302007	302001	302008	302009
Motor Data										
Values at nominal voltage										
1 Nominal voltage	V	9	15	18	24	30	42	48	48	48
2 No load speed	rpm	10000	9660	10200	9560	9860	11100	10300	8240	5050
3 No load current	mA	110	60.8	53.9	36.9	30.5	25.2	20.1	15.2	8.52
4 Nominal speed	rpm	8970	8430	8850	8330	8640	9920	9160	7040	3830
5 Nominal torque (max. continuous torque)	mNm	11.1	20.5	22.9	26.3	26.7	27.1	27.7	28.7	30
6 Nominal current (max. continuous current)	A	1.5	1.5	1.46	1.16	0.968	0.784	0.653	0.536	0.343
7 Stall torque	mNm	232	225	220	243	249	283	264	209	129
8 Starting current	A	29.1	15.8	13.5	10.4	8.72	7.94	6.03	3.81	1.44
9 Max. efficiency	%	76	82	83	85	86	87	87	86	84
Characteristics										
10 Terminal resistance	Ω	0.309	0.952	1.33	2.32	3.44	5.29	7.96	12.6	33.4
11 Terminal inductance	mH	0.0275	0.0882	0.115	0.238	0.353	0.551	0.832	1.31	3.48
12 Torque constant	mNm/A	7.96	14.3	16.3	23.4	28.5	35.6	43.8	55	89.6
13 Speed constant	rpm/V	1200	670	586	408	335	268	218	174	107
14 Speed / torque gradient	rpm/mNm	46.5	44.7	48	40.3	40.4	39.8	39.6	39.8	39.7
15 Mechanical time constant	ms	5.68	4.87	4.77	4.55	4.47	4.4	4.37	4.37	4.35
16 Rotor inertia	gcm²	11.7	10.4	9.49	10.8	10.6	10.6	10.5	10.5	10.5

Specifications

	Thermal data	
17	Thermal resistance housing-ambient	14 K/W
18	Thermal resistance winding-housing	3.1 K/W
19	Thermal time constant winding	12.5 s
20	Thermal time constant motor	612 s
21	Ambient temperature	-30…+100°C
22	Max. permissible winding temperature	+125°C
	Mechanical data (ball bearings)	
23	Max. permissible speed	14000 rpm
24	Axial play	0.05 - 0.15 mm
25	Radial play	0.025 mm
26	Max. axial load (dynamic)	3.2 N
27	Max. force for press fits (static)	64 N
	(static, shaft supported)	800 N
28	Max. radial loading, 5 mm from flange	16 N
	Other specifications	
29	Number of pole pairs	1
30	Number of commutator segments	11
31	Weight of motor	130 g

Values listed in the table are nominal.
Explanation of the figures on page 79.

Option
Preloaded ball bearings

Operating Range

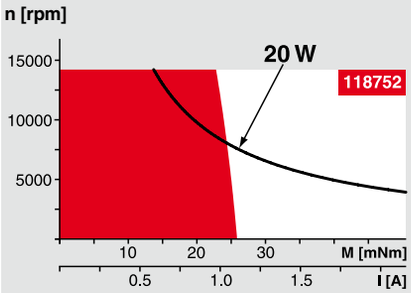

Comments

Continuous operation
In observation of above listed thermal resistance (lines 17 and 18) the maximum permissible winding temperature will be reached during continuous operation at 25°C ambient.
= Thermal limit.

Short term operation
The motor may be briefly overloaded (recurring).

Assigned power rating

maxon Modular System

Overview on page 20–25

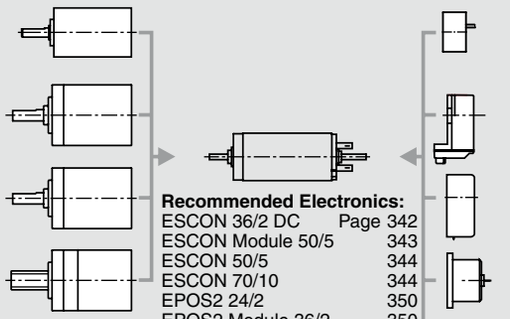

Planetary Gearhead
∅26 mm
0.75 - 4.5 Nm
Page 270

Planetary Gearhead
∅32 mm
0.75 - 6.0 Nm
Page 272/273/276

Koaxdrive
∅32 mm
1.0 - 4.5 Nm
Page 281

Spindle Drive
∅32 mm
Page 301–303

Recommended Electronics:

ESCON 36/2 DC	Page 342
ESCON Module 50/5	343
ESCON 50/5	344
ESCON 70/10	344
EPOS2 24/2	350
EPOS2 Module 36/2	350
EPOS2 24/5, EPOS2 50/5	351
EPOS2 P 24/5	354
EPOS3 70/10 EtherCAT	357
MAXPOS 50/5	360
Notes	**22**

Encoder MR
128 - 1000 CPT,
3 channels
Page 319

Encoder Enc
22 mm
100 CPT, 2 channels
Page 324

Encoder HED_ 5540
500 CPT,
3 channels
Page 325/327

DC-Tacho DCT
∅22 mm
0.52 V
Page 336

Brake AB 28
24 VDC
0.4 Nm
Page 372

RE 30 ∅30 mm, Precious Metal Brushes, 15 Watt

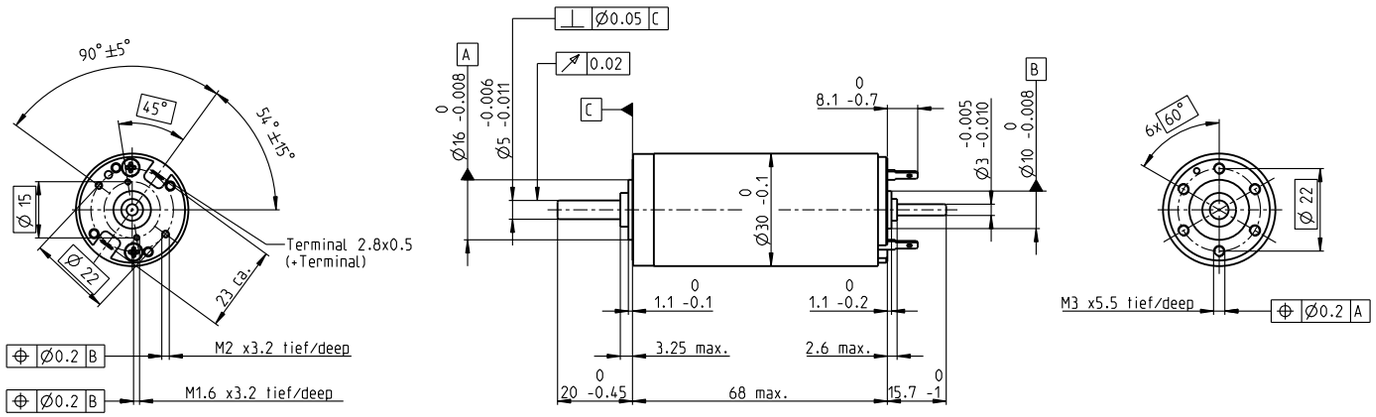

M 1:2

Stock program
Standard program
Special program (on request)

Part Numbers

Motor Data (provisional)		448593	448594	448595	448596
Values at nominal voltage					
1 Nominal voltage	V	6	9	12	18
2 No load speed	rpm	2870	3310	2870	3190
3 No load current	mA	41.6	33.4	20.8	15.9
4 Nominal speed	rpm	2450	2870	2420	2770
5 Nominal torque (max. continuous torque)	mNm	53	53	53	53
6 Nominal current (max. continuous current)	A	2.7	2.08	1.35	1
7 Stall torque	mNm	316	370	330	393
8 Starting current	A	15.9	14.3	8.29	7.3
9 Max. efficiency	%	90	91	90	91
Characteristics					
10 Terminal resistance	Ω	0.378	0.63	1.45	2.47
11 Terminal inductance	mH	0.0703	0.119	0.281	0.513
12 Torque constant	mNm/A	19.9	25.9	39.8	53.8
13 Speed constant	rpm/V	479	369	240	178
14 Speed / torque gradient	rpm/mNm	9.1	8.97	8.71	8.14
15 Mechanical time constant	ms	3.42	3.14	3.02	2.96
16 Rotor inertia	gcm²	35.9	33.5	33.1	34.7

Specifications

Thermal data	
17 Thermal resistance housing-ambient	6 K/W
18 Thermal resistance winding-housing	1.7 K/W
19 Thermal time constant winding	16.9 s
20 Thermal time constant motor	593 s
21 Ambient temperature	-20…+85°C
22 Max. permissible winding temperature	+100°C
Mechanical data (ball bearings)	
23 Max. permissible speed	3300 rpm
24 Axial play at axial load	0.05 - 0.15 mm
25 Radial play	0.025 mm
26 Max. axial load (dynamic)	5.6 N
27 Max. force for press fits (static)	110 N
(static, shaft supported)	1200 N
28 Max. radial loading, 5 mm from flange	28 N
Other specifications	
29 Number of pole pairs	1
30 Number of commutator segments	13
31 Weight of motor	260 g

Values listed in the table are nominal.
Explanation of the figures on page 79.

⚠ Tolerances may vary from the standard specification.

Option
Preloaded ball bearings

Operating Range

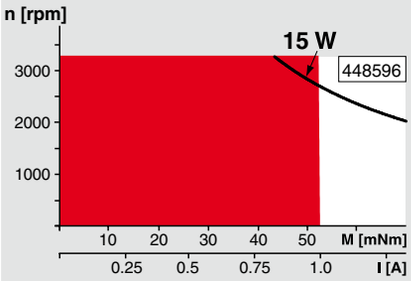

Comments

Continuous operation
In observation of above listed thermal resistance (lines 17 and 18) the maximum permissible winding temperature will be reached during continuous operation at 25°C ambient.
= Thermal limit.

Short term operation
The motor may be briefly overloaded (recurring).

Assigned power rating

maxon Modular System

Overview on page 20–25

Planetary Gearhead
∅32 mm
0.75 - 4.5 Nm
Page 274

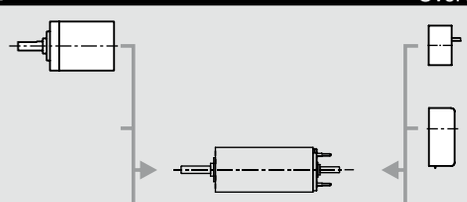

Encoder MR
256 - 1024 CPT,
3 channels
Page 320

Encoder HED_ 5540
500 CPT,
3 channels
Page 325/329

Recommended Electronics:

ESCON 36/2 DC	Page 342
ESCON Module 50/5	343
ESCON 50/5	344
EPOS2 24/2	350
EPOS2 Module 36/2	350
EPOS2 24/5, EPOS2 50/5	351
EPOS2 P 24/5	354
EPOS3 70/10 EtherCAT	357
MAXPOS 50/5	360
Notes	**22**

RE 30 ∅30 mm, Graphite Brushes, 60 Watt

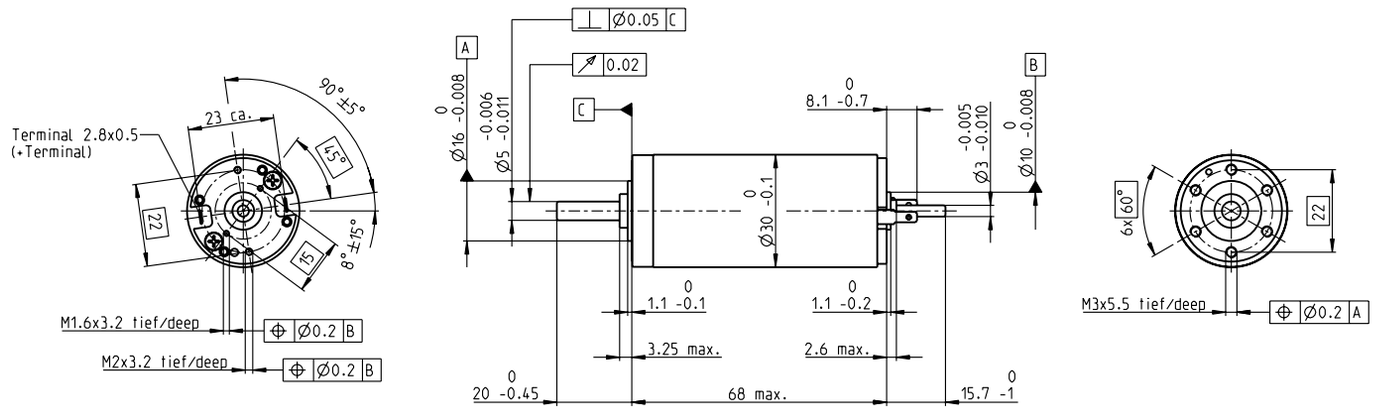

M 1:2

Stock program
Standard program
Special program (on request)

Part Numbers

according to dimensional drawing	310005	310006	310007	310008	310009
shaft length 15.7 shortened to 8.7 mm	268193	268213	268214	268215	268216

Motor Data

	Values at nominal voltage						
1	Nominal voltage	V	12	18	24	36	48
2	No load speed	rpm	8170	8590	8810	8590	8490
3	No load current	mA	301	213	165	106	78.6
4	Nominal speed	rpm	7630	7910	8050	7840	7760
5	Nominal torque (max. continuous torque)	mNm	51.6	75.5	85.6	86.6	89.7
6	Nominal current (max. continuous current)	A	4	4	3.47	2.28	1.74
7	Stall torque	mNm	852	1000	1020	1000	1050
8	Starting current	A	61.1	50.3	39.3	25.2	19.6
9	Max. efficiency	%	85	87	87	87	88
	Characteristics						
10	Terminal resistance	Ω	0.196	0.358	0.611	1.43	2.45
11	Terminal inductance	mH	0.0345	0.0703	0.119	0.281	0.513
12	Torque constant	mNm/A	13.9	19.9	25.9	39.8	53.8
13	Speed constant	rpm/V	685	479	369	240	178
14	Speed / torque gradient	rpm/mNm	9.64	8.61	8.69	8.61	8.09
15	Mechanical time constant	ms	3.4	3.24	3.05	2.98	2.94
16	Rotor inertia	gcm²	33.7	35.9	33.5	33.1	34.7

Specifications

	Thermal data	
17	Thermal resistance housing-ambient	6.0 K/W
18	Thermal resistance winding-housing	1.7 K/W
19	Thermal time constant winding	16.3 s
20	Thermal time constant motor	525 s
21	Ambient temperature	-30…+100°C
22	Max. permissible winding temperature	+125°C
	Mechanical data (ball bearings)	
23	Max. permissible speed	12000 rpm
24	Axial play	0.05 - 0.15 mm
25	Radial play	0.025 mm
26	Max. axial load (dynamic)	5.6 N
27	Max. force for press fits (static)	110 N
	(static, shaft supported)	1200 N
28	Max. radial loading, 5 mm from flange	28 N
	Other specifications	
29	Number of pole pairs	1
30	Number of commutator segments	13
31	Weight of motor	260 g

Values listed in the table are nominal.
Explanation of the figures on page 79.

⚠ Tolerances may vary from the standard specification.

Option
Preloaded ball bearings

Operating Range

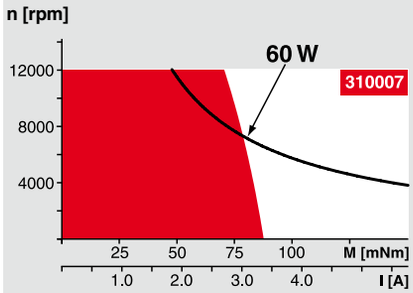

Comments

Continuous operation
In observation of above listed thermal resistance (lines 17 and 18) the maximum permissible winding temperature will be reached during continuous operation at 25°C ambient.
= Thermal limit.

Short term operation
The motor may be briefly overloaded (recurring).

Assigned power rating

maxon Modular System

Overview on page 20–25

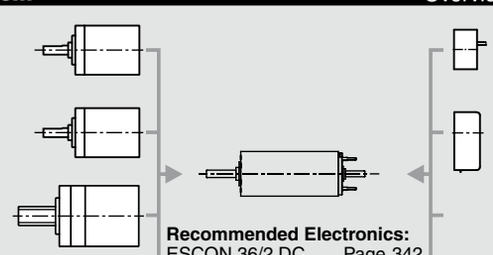

Planetary Gearhead
∅32 mm
0.75 - 6.0 Nm
Page 272–278

Koaxdrive
∅32 mm
1.0 - 4.5 Nm
Page 281

Spindle Drive
∅32 mm
Page 301–303

Encoder MR
256 - 1024 CPT,
3 channels
Page 320

Encoder HED_ 5540
500 CPT,
3 channels
Page 325/329

Recommended Electronics:

ESCON 36/2 DC	Page 342
ESCON Module 50/5	343
ESCON 50/5	344
ESCON 70/10	344
EPOS2 Module 36/2	350
EPOS2 24/5, EPOS2 50/5	351
EPOS2 P 24/5	354
EPOS3 70/10 EtherCAT	357
MAXPOS 50/5	360
Notes	**22**

RE 35 ∅35 mm, Graphite Brushes, 90 Watt

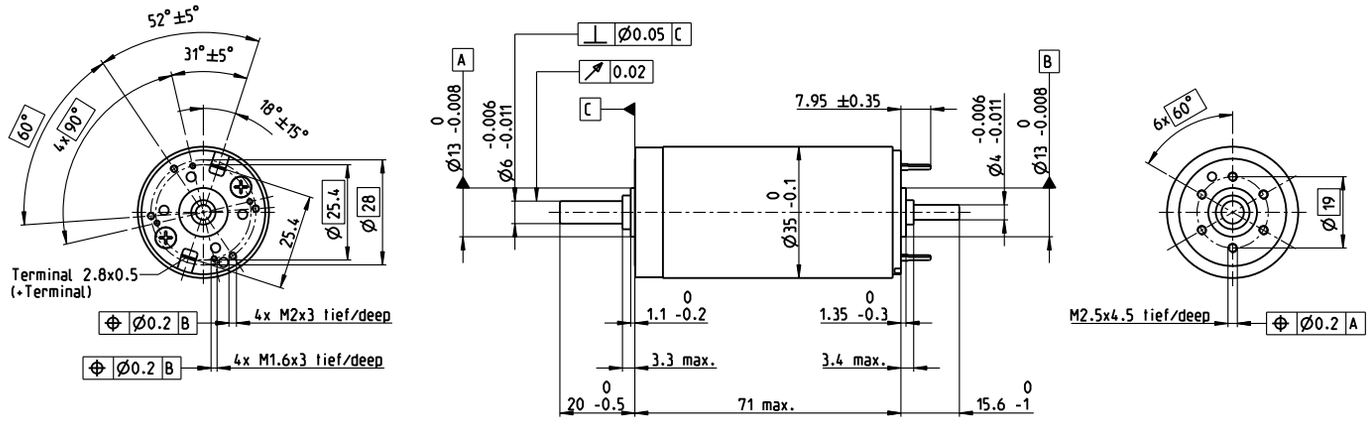

M 1:2

Stock program
Standard program
Special program (on request)

Part Numbers

according to dimensional drawing		273752	323890	273753	273754	273755	273756	273757	273758	273759	273760	273761	273762	273763
shaft length 15.6 shortened to 4 mm		285785	323891	285786	285787	285788	285789	285790	285791	285792	285793	285794	285795	285796
Motor Data														
Values at nominal voltage														
1 Nominal voltage	V	15	24	30	42	48	48	48	48	48	48	48	48	48
2 No load speed	rpm	7180	7740	7270	7560	7300	6670	5980	4760	3820	3140	2580	2110	1630
3 No load current	mA	247	169	124	92.9	77.5	68.8	59.8	44.8	34.2	27.2	21.6	17.2	13
4 Nominal speed	rpm	6500	7000	6490	6820	6530	5890	5180	3940	2990	2290	1720	1230	736
5 Nominal torque (max. continuous torque)	mNm	73.1	101	97.2	101	99.4	101	101	104	106	106	106	105	105
6 Nominal current (max. continuous current)	A	4	3.62	2.62	2.02	1.67	1.55	1.39	1.14	0.928	0.761	0.626	0.507	0.393
7 Stall torque	mNm	929	1200	973	1080	980	890	776	620	498	398	322	255	196
8 Starting current	A	47.8	41.1	25	20.7	15.8	13.1	10.2	6.5	4.2	2.76	1.84	1.19	0.708
9 Max. efficiency	%	83	86	85	86	86	85	85	84	82	81	79	77	74
Characteristics														
10 Terminal resistance	Ω	0.314	0.583	1.2	2.03	3.05	3.67	4.69	7.38	11.4	17.4	26	40.2	67.8
11 Terminal inductance	mH	0.085	0.191	0.34	0.62	0.87	1.04	1.29	2.04	3.16	4.65	6.89	10.3	17.1
12 Torque constant	mNm/A	19.4	29.2	38.9	52.5	62.2	68	75.8	95.2	119	144	175	214	276
13 Speed constant	rpm/V	491	328	246	182	154	140	126	100	80.5	66.4	54.6	44.7	34.6
14 Speed / torque gradient	rpm/mNm	7.93	6.55	7.57	7.05	7.52	7.57	7.79	7.77	7.76	8.01	8.13	8.4	8.49
15 Mechanical time constant	ms	5.65	5.44	5.4	5.35	5.34	5.35	5.35	5.36	5.36	5.37	5.38	5.39	5.41
16 Rotor inertia	gcm²	68.1	79.2	68.1	72.5	67.9	67.4	65.6	65.9	65.9	64	63.2	61.2	60.8

Specifications

Thermal data	
17 Thermal resistance housing-ambient	6.2 K/W
18 Thermal resistance winding-housing	2.0 K/W
19 Thermal time constant winding	30.2 s
20 Thermal time constant motor	644 s
21 Ambient temperature	-30…+100°C
22 Max. permissible winding temperature	+155°C
Mechanical data (ball bearings)	
23 Max. permissible speed	12000 rpm
24 Axial play	0.05 - 0.15 mm
25 Radial play	0.025 mm
26 Max. axial load (dynamic)	5.6 N
27 Max. force for press fits (static)	110 N
(static, shaft supported)	1200 N
28 Max. radial loading, 5 mm from flange	28 N
Other specifications	
29 Number of pole pairs	1
30 Number of commutator segments	13
31 Weight of motor	340 g

Values listed in the table are nominal.
Explanation of the figures on page 79.

Option
Hollow shaft as special design
Preloaded ball bearings

Operating Range

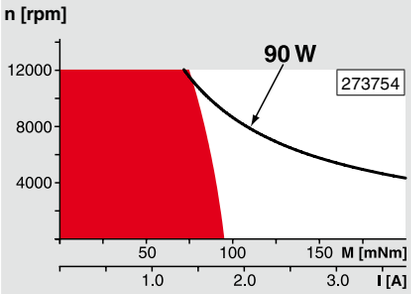

Comments

Continuous operation
In observation of above listed thermal resistance (lines 17 and 18) the maximum permissible winding temperature will be reached during continuous operation at 25°C ambient.
= Thermal limit.

Short term operation
The motor may be briefly overloaded (recurring).

Assigned power rating

maxon Modular System

Overview on page 20–25

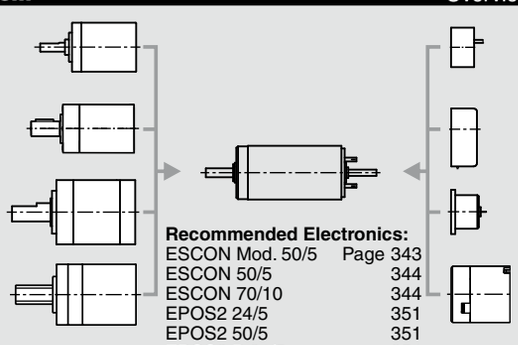

Planetary Gearhead
∅32 mm
0.75 - 6.0 Nm
Page 272–278

Planetary Gearhead
∅32 mm
4.0 - 8.0 Nm
Page 279

Planetary Gearhead
∅42 mm
3 - 15 Nm
Page 283

Spindle Drive
∅32 mm
Page 301–303

Recommended Electronics:

ESCON Mod. 50/5	Page 343
ESCON 50/5	344
ESCON 70/10	344
EPOS2 24/5	351
EPOS2 50/5	351
EPOS2 P 24/5	354
EPOS3 70/10 EtherCAT	357
MAXPOS 50/5	360
Notes	**22**

Encoder MR
256 - 1024 CPT,
3 channels
Page 320

Encoder HED_ 5540
500 CPT,
3 channels
Page 325/327

DC-Tacho DCT
∅22 mm
0.52 V
Page 336

Brake AB 28
24 VDC
0.4 Nm
Page 372

End cap
Page 377

RE 40 ∅40 mm, Precious Metal Brushes, 25 Watt

NEW

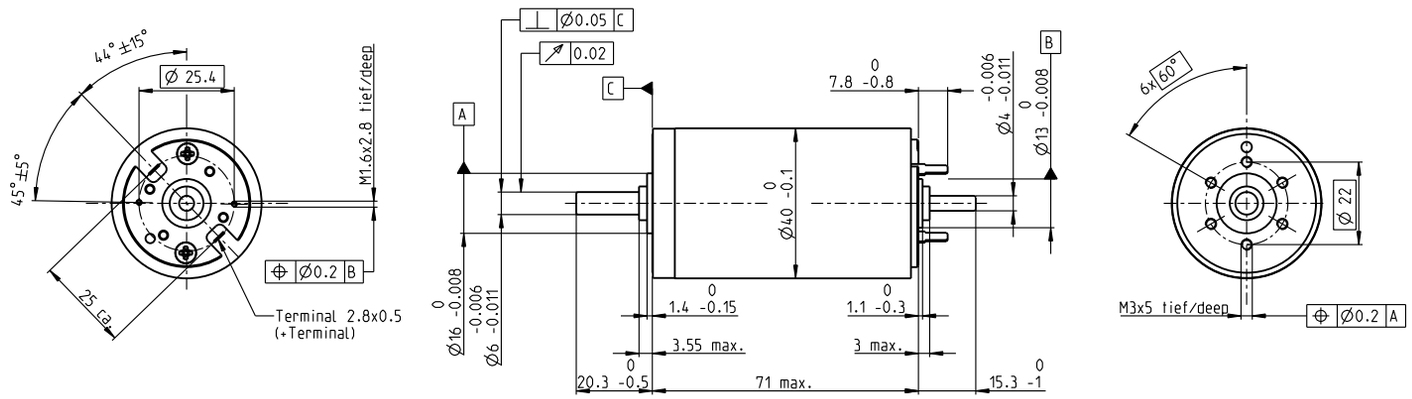

M 1:2

Stock program
Standard program
Special program (on request)

Part Numbers

Motor Data (provisional)		448588	448589	448590	448591	448592
Values at nominal voltage						
1 Nominal voltage	V	9	18	24	42	48
2 No load speed	rpm	2850	2850	2780	2920	2690
3 No load current	mA	49.7	24.8	18.1	11	8.62
4 Nominal speed	rpm	2610	2600	2480	2640	2410
5 Nominal torque (max. continuous torque)	mNm	87.8	87.8	88.2	87.6	87.6
6 Nominal current (max. continuous current)	A	2.96	1.48	1.09	0.65	0.524
7 Stall torque	mNm	873	956	794	895	818
8 Starting current	A	29	15.9	9.66	6.53	4.81
9 Max. efficiency	%	92	92	92	92	92
Characteristics						
10 Terminal resistance	Ω	0.311	1.14	2.49	6.43	9.97
11 Terminal inductance	mH	0.0824	0.33	0.613	1.7	2.62
12 Torque constant	mNm/A	30.2	60.3	82.2	137	170
13 Speed constant	rpm/V	317	158	116	69.7	56.2
14 Speed / torque gradient	rpm/mNm	3.27	2.98	3.51	3.27	3.3
15 Mechanical time constant	ms	4.85	4.29	4.36	4.14	4.13
16 Rotor inertia	gcm²	142	137	119	121	120

Specifications

Thermal data	
17 Thermal resistance housing-ambient	4.65 K/W
18 Thermal resistance winding-housing	1.93 K/W
19 Thermal time constant winding	41.5 s
20 Thermal time constant motor	809 s
21 Ambient temperature	-20…+85°C
22 Max. permissible winding temperature	+100°C
Mechanical data (ball bearings)	
23 Max. permissible speed	3330 rpm
24 Axial play	0.05 - 0.15 mm
25 Radial play	0.025 mm
26 Max. axial load (dynamic)	5.6 N
27 Max. force for press fits (static)	110 N
(static, shaft supported)	1200 N
28 Max. radial loading, 5 mm from flange	28 N
Other specifications	
29 Number of pole pairs	1
30 Number of commutator segments	13
31 Weight of motor	480 g

Values listed in the table are nominal.
Explanation of the figures on page 79.

Option
Preloaded ball bearings

Operating Range

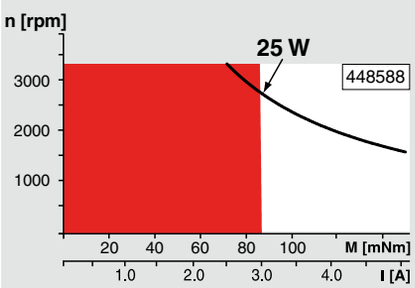

Comments

Continuous operation
In observation of above listed thermal resistance (lines 17 and 18) the maximum permissible winding temperature will be reached during continuous operation at 25°C ambient.
= Thermal limit.

Short term operation
The motor may be briefly overloaded (recurring).

Assigned power rating

maxon Modular System

Overview on page 20–25

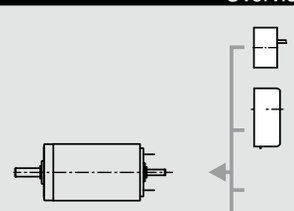

Encoder MR
256 - 1024 CPT,
3 channels
Page 320

Encoder HED_ 5540
500 CPT,
3 channels
Page 325/327

Recommended Electronics:

ESCON 36/2 DC	Page 342
ESCON Module 50/5	343
ESCON 50/5	344
EPOS2 24/2	350
EPOS2 Module 36/2	350
EPOS2 24/5, EPOS2 50/5	351
EPOS2 P 24/5	354
EPOS3 70/10 EtherCAT	357
MAXPOS 50/5	360
Notes	**22**

RE 40 ∅40 mm, Graphite Brushes, 150 Watt

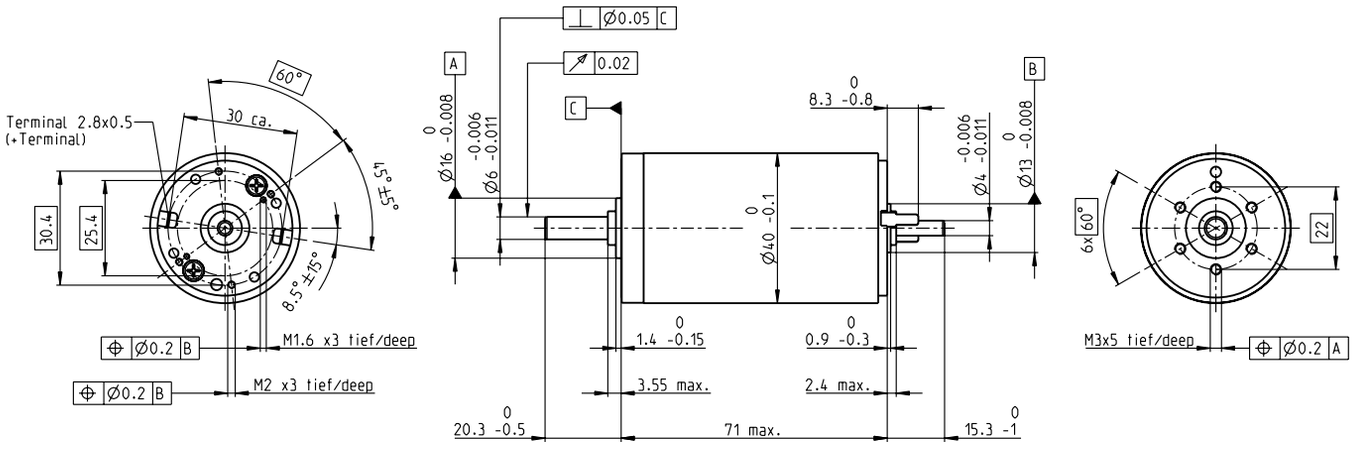

M 1:2

Stock program
Standard program
Special program (on request)

Part Numbers

		148866	148867	148877	218008	218009	218010	218011	218012	218013	218014
Motor Data											
Values at nominal voltage											
1 Nominal voltage	V	12	24	48	48	48	48	48	48	48	48
2 No load speed	rpm	6920	7580	7590	6420	5560	3330	2690	2130	1720	1420
3 No load current	mA	241	137	68.6	53.6	43.7	21.9	16.6	12.5	9.66	7.76
4 Nominal speed	rpm	6380	6940	7000	5810	4930	2710	2060	1510	1080	781
5 Nominal torque (max. continuous torque)	mNm	94.9	177	187	186	180	189	190	192	192	190
6 Nominal current (max. continuous current)	A	6	6	3.17	2.66	2.23	1.4	1.13	0.909	0.73	0.6
7 Stall torque	mNm	1720	2420	2560	2040	1620	1020	814	655	523	424
8 Starting current	A	105	80.2	42.4	28.6	19.7	7.43	4.79	3.06	1.97	1.32
9 Max. efficiency	%	87	91	92	91	91	89	89	88	87	85
Characteristics											
10 Terminal resistance	Ω	0.115	0.299	1.13	1.68	2.44	6.46	10	15.7	24.4	36.3
11 Terminal inductance	mH	0.0245	0.0823	0.329	0.46	0.612	1.7	2.62	4.14	6.4	9.31
12 Torque constant	mNm/A	16.4	30.2	60.3	71.3	82.2	137	170	214	266	321
13 Speed constant	rpm/V	581	317	158	134	116	69.7	56.2	44.7	35.9	29.8
14 Speed / torque gradient	rpm/mNm	4.05	3.14	2.97	3.16	3.45	3.29	3.31	3.27	3.29	3.37
15 Mechanical time constant	ms	5.89	4.67	4.28	4.2	4.19	4.16	4.15	4.15	4.15	4.16
16 Rotor inertia	gcm²	139	142	137	127	116	121	120	121	120	118

Specifications

Thermal data	
17 Thermal resistance housing-ambient	4.7 K/W
18 Thermal resistance winding-housing	1.9 K/W
19 Thermal time constant winding	41.5 s
20 Thermal time constant motor	736 s
21 Ambient temperature	-30…+100°C
22 Max. permissible winding temperature	+155°C
Mechanical data (ball bearings)	
23 Max. permissible speed	12000 rpm
24 Axial play	0.05 - 0.15 mm
25 Radial play	0.025 mm
26 Max. axial load (dynamic)	5.6 N
27 Max. force for press fits (static)	110 N
(static, shaft supported)	1200 N
28 Max. radial loading, 5 mm from flange	28 N
Other specifications	
29 Number of pole pairs	1
30 Number of commutator segments	13
31 Weight of motor	480 g

Values listed in the table are nominal.
Explanation of the figures on page 79.

Option
Preloaded ball bearings

Operating Range

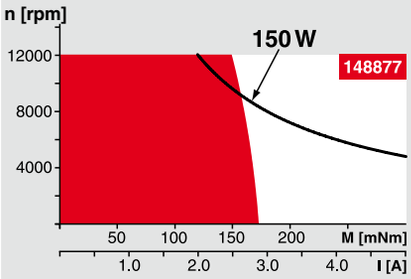

Comments

Continuous operation
In observation of above listed thermal resistance (lines 17 and 18) the maximum permissible winding temperature will be reached during continuous operation at 25°C ambient.
= Thermal limit.

Short term operation
The motor may be briefly overloaded (recurring).

Assigned power rating

maxon Modular System

Overview on page 20–25

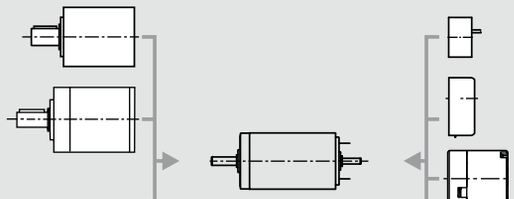

Planetary Gearhead
∅42 mm
3 - 15 Nm
Page 283

Planetary Gearhead
∅52 mm
4 - 30 Nm
Page 287

Recommended Electronics:

ESCON Mod. 50/5	Page 343
ESCON 50/5	344
ESCON 70/10	344
EPOS2 24/5	351
EPOS2 50/5	351
EPOS2 70/10	351
EPOS2 P 24/5	354
EPOS3 70/10 EtherCAT	357
MAXPOS 50/5	360
Notes	**22**

Encoder MR
256 - 1024 CPT,
3 channels
Page 320

Encoder HED_ 5540
500 CPT,
3 channels
Page 325/327

Brake AB 28
24 VDC
0.4 Nm
Page 372

Industrial Version
Encoder HEDL 9140
Page 331

Brake AB 28
Page 373

End cap
Page 377

RE 50 ∅50 mm, Graphite Brushes, 200 Watt

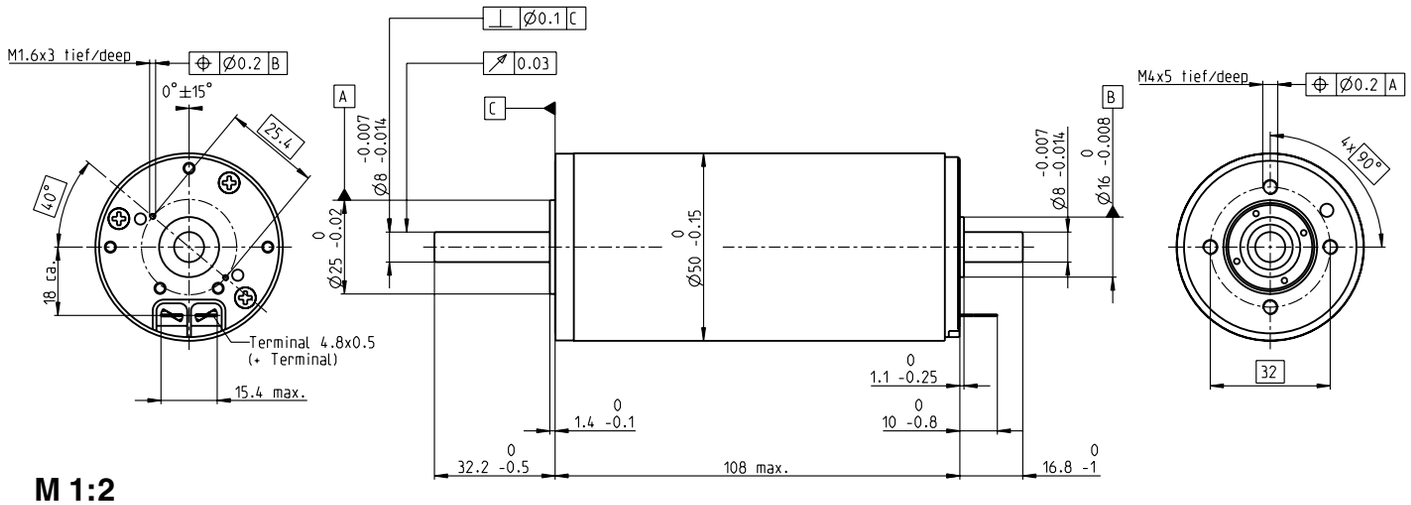

M 1:2

Stock program
Standard program
Special program (on request)

Part Numbers

	370354	370355	370356	370357
Industrial Version IP54*	389089	389090	389091	389092

Motor Data

	Values at nominal voltage					
1	Nominal voltage	V	24	36	48	70
2	No load speed	rpm	5950	5680	4900	2760
3	No load current	mA	236	147	88.4	27.4
4	Nominal speed	rpm	5680	5420	4620	2470
5	Nominal torque (max. continuous torque)	mNm	405	418	420	452
6	Nominal current (max. continuous current)	A	10.8	7.07	4.58	1.89
7	Stall torque	mNm	8920	8920	7370	4340
8	Starting current	A	232	148	78.9	17.9
9	Max. efficiency	%	94	94	94	92
	Characteristics					
10	Terminal resistance	Ω	0.103	0.244	0.608	3.9
11	Terminal inductance	mH	0.0717	0.177	0.423	2.83
12	Torque constant	mNm/A	38.5	60.4	93.4	242
13	Speed constant	rpm/V	248	158	102	39.5
14	Speed / torque gradient	rpm/mNm	0.668	0.638	0.666	0.638
15	Mechanical time constant	ms	3.75	3.74	3.78	3.74
16	Rotor inertia	gcm²	536	560	542	560

Specifications

	Thermal data	
17	Thermal resistance housing-ambient	3.8 K/W
18	Thermal resistance winding-housing	1.2 K/W
19	Thermal time constant winding	71.7 s
20	Thermal time constant motor	1370 s
21	Ambient temperature	-30…+100°C
22	Max. permissible winding temperature	+125°C
	Mechanical data (preloaded ball bearings)	
23	Max. permissible speed	9500 rpm
24	Axial play at axial load < 11.5 N	0 mm
	> 11.5 N	0.1 mm
25	Radial play	preloaded
26	Max. axial load (dynamic)	30 N
27	Max. force for press fits (static)	150 N
	(static, shaft supported)	6000 N
28	Max. radial loading, 15 mm from flange	110 N
	Other specifications	
29	Number of pole pairs	1
30	Number of commutator segments	15
31	Weight of motor	1100 g

Values listed in the table are nominal.
Explanation of the figures on page 79.

* Industrial version with radial shaft seal ring (resulting in increased no load current). IP54 protection only if mounted on brush side, in compliance with maxon modular system.

Operating Range

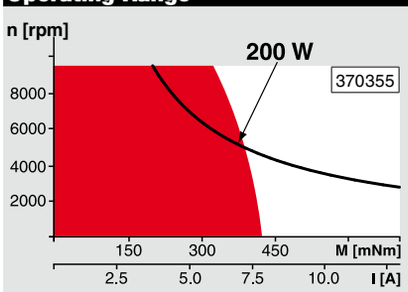

Comments

Continuous operation
In observation of above listed thermal resistance (lines 17 and 18) the maximum permissible winding temperature will be reached during continuous operation at 25°C ambient.
= Thermal limit.

Short term operation
The motor may be briefly overloaded (recurring).

Assigned power rating

maxon Modular System

Overview on page 20–25

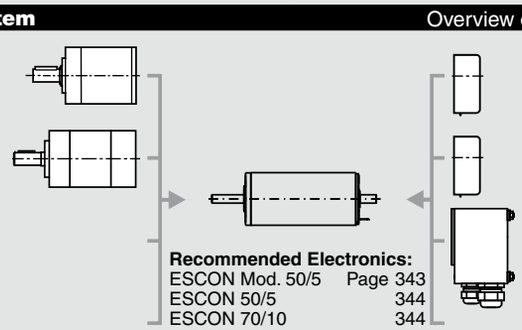

Planetary Gearhead
∅52 mm
4 - 30 Nm
Page 287

Planetary Gearhead
∅62 mm
8 - 50 Nm
Page 289

Recommended Electronics:

ESCON Mod. 50/5	Page 343
ESCON 50/5	344
ESCON 70/10	344
EPOS2 50/5	351
EPOS2 70/10	351
EPOS3 70/10 EtherCAT	357
MAXPOS 50/5	360
Notes	**22**

Encoder HEDS 5540
500 CPT,
3 channels
Page 326

Encoder HEDL 5540
500 CPT,
3 channels
Page 328

Industrial Version IP54*
Encoder HEDL 9140
Page 332
Brake AB 44
Page 376
End cap
Page 377

RE 65 ∅65 mm, Graphite Brushes, 250 Watt

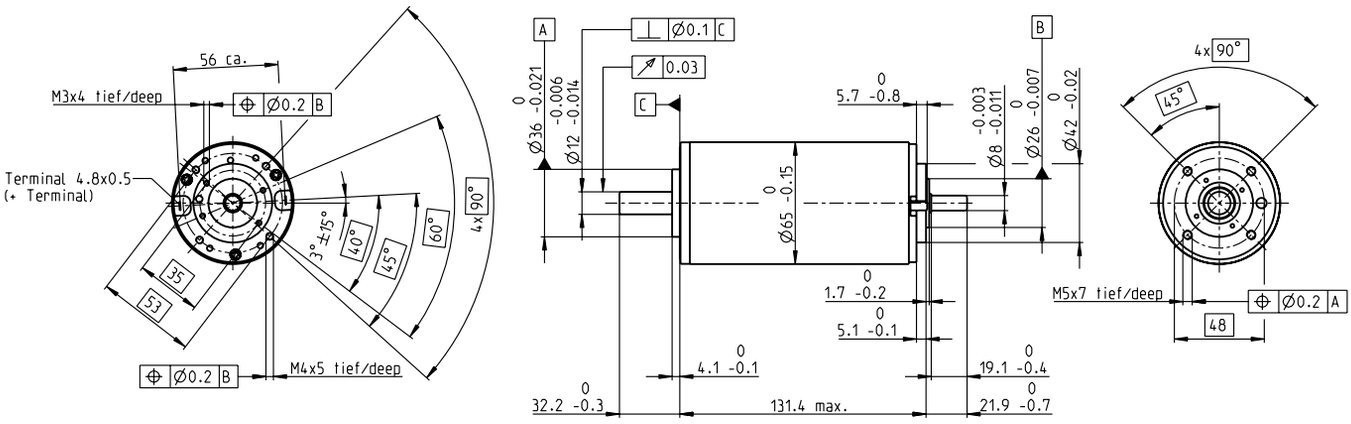

M 1:4

Stock program
Standard program
Special program (on request)

Part Numbers

	353294	353295	353296	353297	353298	353299	353300	353301
Industrial Version IP54*	388984	388985	388986	388987	388988	388989	388990	388991

Motor Data

	Values at nominal voltage											
1	Nominal voltage	V	18	24	36	48	60	70	70	70		
2	No load speed	rpm	3420	3960	3850	3560	3570	3340	3090	2610		
3	No load current	mA	721	665	417	276	221	171	153	120		
4	Nominal speed	rpm	3150	3710	3630	3340	3360	3130	2880	2410		
5	Nominal torque (max. continuous torque)	mNm	442	485	628	722	758	796	809	865		
6	Nominal current (max. continuous current)	A	10	9.4	7.62	5.97	5.01	4.19	3.93	3.54		
7	Stall torque	mNm	14000	16200	18000	16600	16700	15500	14100	12600		
8	Starting current	A	296	292	207	131	106	78.6	66.1	49.7		
9	Max. efficiency	%	80	83	87	88	89	89	89	89		
	Characteristics											
10	Terminal resistance	Ω	0.0609	0.0821	0.174	0.365	0.568	0.891	1.06	1.41		
11	Terminal inductance	mH	0.0226	0.0308	0.076	0.161	0.251	0.393	0.458	0.643		
12	Torque constant	mNm/A	47.5	55.4	87	127	158	198	214	253		
13	Speed constant	rpm/V	201	172	110	75.4	60.4	48.3	44.7	37.7		
14	Speed / torque gradient	rpm/mNm	0.258	0.256	0.22	0.218	0.217	0.218	0.222	0.21		
15	Mechanical time constant	ms	3.74	3.46	3.18	3.05	3	2.97	2.97	2.94		
16	Rotor inertia	gcm²	1380	1290	1380	1340	1320	1310	1280	1340		

Specifications

	Thermal data	
17	Thermal resistance housing-ambient	1.3 K/W
18	Thermal resistance winding-housing	1.9 K/W
19	Thermal time constant winding	123 s
20	Thermal time constant motor	960 s
21	Ambient temperature	-30…+100°C
22	Max. permissible winding temperature	+125°C
	Mechanical data (preloaded ball bearings)	
23	Max. permissible speed	5500 rpm
24	Axial play at axial load < 25 N	0 mm
	> 25 N	0.1 mm
25	Radial play	preloaded
26	Max. axial load (dynamic)	70 N
27	Max. force for press fits (static)	420 N
	(static, shaft supported)	12000 N
28	Max. radial loading, 15 mm from flange	350 N
	Other specifications	
29	Number of pole pairs	2
30	Number of commutator segments	26
31	Weight of motor	2100 g

Values listed in the table are nominal.
Explanation of the figures on page 79.

* Industrial version with radial shaft seal ring (resulting in increased no load current). IP54 protection only if mounted on brush side, in compliance with maxon modular system.

Operating Range

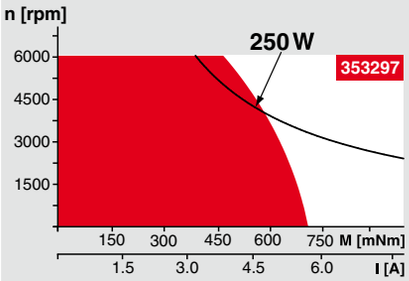

Comments

Continuous operation
In observation of above listed thermal resistance (lines 17 and 18) the maximum permissible winding temperature will be reached during continuous operation at 25°C ambient.
= Thermal limit.

Short term operation
The motor may be briefly overloaded (recurring).

Assigned power rating

maxon Modular System

Overview on page 20–25

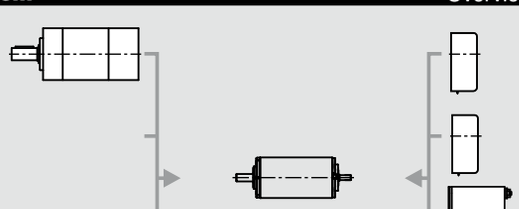

Planetary Gearhead
∅81 mm
20 - 120 Nm
Page 290

Recommended Electronics:

ESCON Mod. 50/5	Page 343
ESCON 50/5	344
ESCON 70/10	344
EPOS2 50/5	351
EPOS2 70/10	351
EPOS3 70/10 EtherCAT	357
MAXPOS 50/5	360
Notes	**22**

Encoder HEDS 5540
500 CPT,
3 channels
Page 326

Encoder HEDL 5540
500 CPT,
3 channels
Page 328

Industrial Version IP54*
Encoder HEDL 9140
Page 332
Brake AB 44
Page 376
End cap
Page 377

maxon A-max

maxon A-max

- Good price/performance ratio
- Equipped with AlNiCo magnets
- High and consistent quality thanks to mastery and monitoring of the processes
- Same part platform – compatible with the RE-max
- Automated manufacturing process
- Open for customer-oriented modifications

Summary 118

DC motor 12–32 mm in diameter 119–144

maxon A-max program

The economically priced DC motor program that gives you top performance and convincing quality.

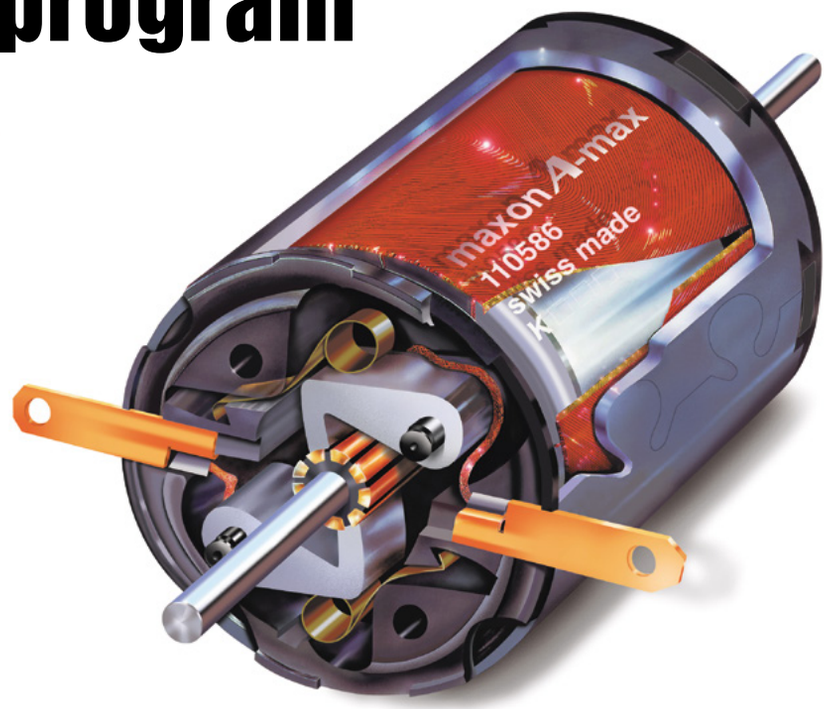

Motor housing, precision-made from rolled steel, delivers high strength yet minimizes waste material to reduce costs.

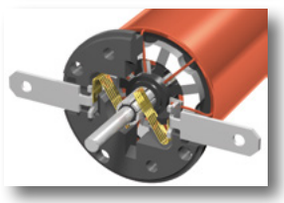

Power leads or AMP-compatible terminals. Save strain relieve on power leads.

Elimination of a C-Clip groove results in higher torsional stability and greater cross-sectional strength.

Reduced-diameter commutator, employing more segments, provides longer life.

Hybrid process forms the stator by assembling motor housing, magnet and end cap in one step using injection molding of PPA plastic. Customers can select either sleeve or ball bearings.

Glass-fibre reinforced polyphtalamide plastic (PPA), impact-resistant, heat-resistant up to 125°C and noise absorbing.

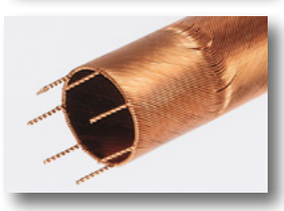

Proven winding technology provides a high-performance relationship between the coil and magnet system.

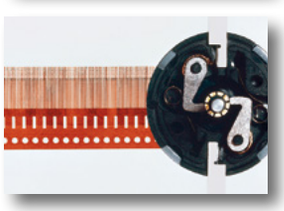

Graphite brushes for the most demanding tasks. 4-, 5- or 7-fingered precious metal brushes for fine rotary motions.

Modular construction of the A-max series

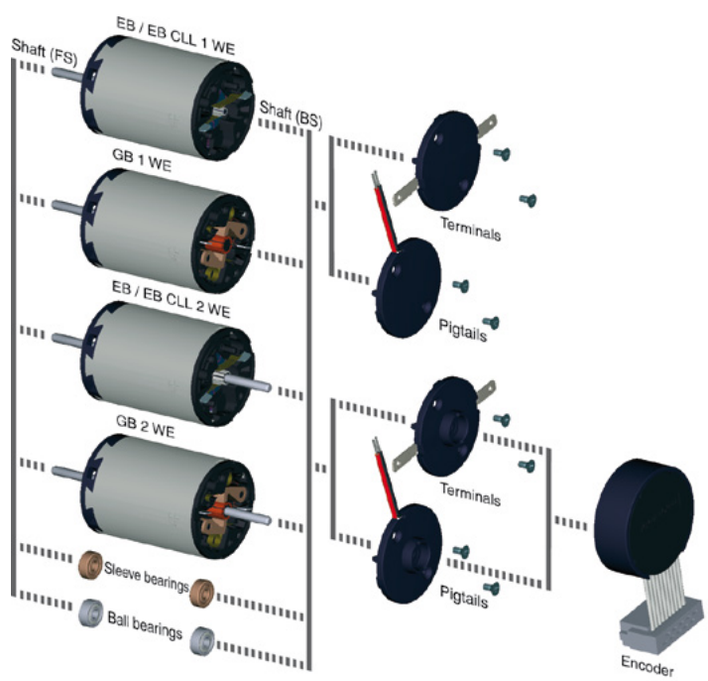

X = Standard X = Option WE = Shaft end		A-max 12 1 WE	A-max 12 2 WE	A-max 16 1 WE	A-max 16 2 WE	A-max 19 1 WE	A-max 19 2 WE	A-max 22 1 WE	A-max 22 2 WE	A-max 26 1 WE	A-max 26 2 WE	A-max 32 1 WE	A-max 32 2 WE
Precious Metal Brushes (EB)				X	X	X	X	X	X	X	X		
Precious Metal Brushes (EB) and CLL		X	X	X	X	X	X	X	X	X	X		
Graphite Brushes (GB)				X	X	X	X	X	X	X	X	X	X
Sleeve Bearings		X	X	X	X	X	X	X	X	X	X	X	X
Ball Bearings		X	X	X	X	X	X	X	X	X	X	X	X
Terminals				X	X	X	X	X	X	X	X	X	X
Pigtails		X	X	X	X	X	X	X	X	X	X	X	X
Shaft flange side (FS)	min.	4.5	4.5	4.5	4.5	5.0	5.0	5.0	5.0	6.0	6.0	6.0	6.0
	max.	10.0	10.0	15.0	15.0	27.4	27.4	25.0	25.0	27.0	27.0	27.0	27.0
Shaft brush side (BS)	min.		2.6		2.6		2.6		2.6		2.6		3.0
	max.		9.4		10.0		16.6		16.0		16.0		19.3

A-max 12 ∅12 mm, Precious Metal Brushes CLL, 0.75 Watt

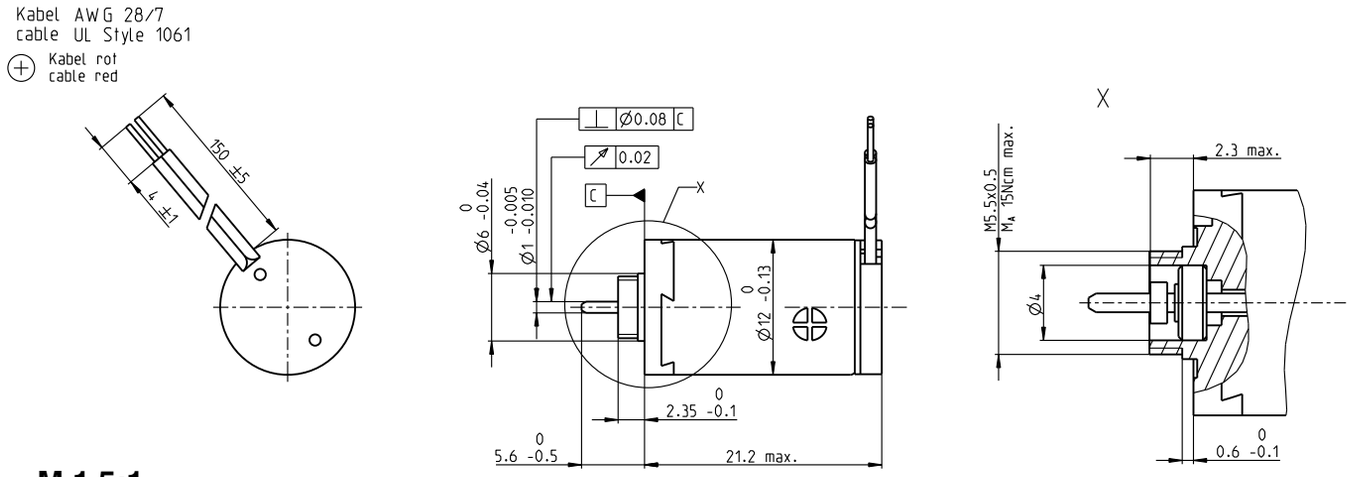

M 1.5:1

maxon A-max

Stock program
Standard program
Special program (on request)

Part Numbers

Motor Data		200937	265374	265375	265376	265377	265378
Values at nominal voltage							
1 Nominal voltage	V	3	4.5	6	9	12	15
2 No load speed	rpm	13900	11900	12800	12100	12300	13800
3 No load current	mA	21.1	11.5	9.47	5.87	4.5	4.2
4 Nominal speed	rpm	5980	4380	5260	4470	4610	5030
5 Nominal torque (max. continuous torque)	mNm	0.897	0.961	0.948	0.941	0.931	0.804
6 Nominal current (max. continuous current)	A	0.465	0.282	0.225	0.141	0.107	0.0836
7 Stall torque	mNm	1.58	1.55	1.63	1.52	1.52	1.29
8 Starting current	A	0.789	0.438	0.374	0.22	0.168	0.129
9 Max. efficiency	%	70	71	71	70	70	68
Characteristics							
10 Terminal resistance	Ω	3.8	10.3	16	40.9	71.6	116
11 Terminal inductance	mH	0.0851	0.263	0.402	1.01	1.74	2.13
12 Torque constant	mNm/A	2.01	3.53	4.36	6.92	9.06	10
13 Speed constant	rpm/V	4760	2710	2190	1380	1050	952
14 Speed / torque gradient	rpm/mNm	9030	7880	8060	8170	8330	11000
15 Mechanical time constant	ms	20.6	20.3	20.4	20.4	20.5	21.1
16 Rotor inertia	gcm²	0.218	0.246	0.241	0.238	0.235	0.183

Specifications

	Thermal data	
17	Thermal resistance housing-ambient	44.5 K/W
18	Thermal resistance winding-housing	15 K/W
19	Thermal time constant winding	5.03 s
20	Thermal time constant motor	245 s
21	Ambient temperature	-30…+65°C
22	Max. permissible winding temperature	+85°C
	Mechanical data (sleeve bearings)	
23	Max. permissible speed	19000 rpm
24	Axial play	0.05 - 0.15 mm mm
25	Radial play	0.012 mm
26	Max. axial load (dynamic)	0.15 N
27	Max. force for press fits (static)	15 N
28	Max. radial loading, 4 mm from flange	0.4 N
	Other specifications	
29	Number of pole pairs	1
30	Number of commutator segments	7
31	Weight of motor	11 g

CLL = Capacitor Long Life
Alignment of the electronic connections not specified.

Values listed in the table are nominal.
Explanation of the figures on page 79.

Operating Range

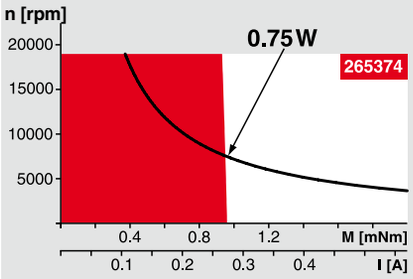

Comments

Continuous operation
In observation of above listed thermal resistance (lines 17 and 18) the maximum permissible winding temperature will be reached during continuous operation at 25°C ambient.
= Thermal limit.

Short term operation
The motor may be briefly overloaded (recurring).

Assigned power rating

maxon Modular System

Overview on page 20–25

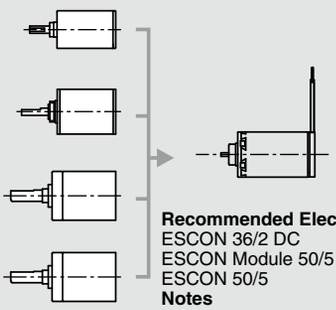

Planetary Gearhead
∅10 mm
0.005 - 0.15 Nm
Page 245

Spur Gearhead
∅12 mm
0.008 - 0.025 Nm
Page 246

Planetary Gearhead
∅13 mm
0.05 - 0.15 Nm
Page 247

Planetary Gearhead
∅13 mm
0.2 - 0.35 Nm
Page 248

Recommended Electronics:

ESCON 36/2 DC	Page 342
ESCON Module 50/5	343
ESCON 50/5	344
Notes	**22**

A-max 12 ∅12 mm, Precious Metal Brushes CLL, 0.5 Watt

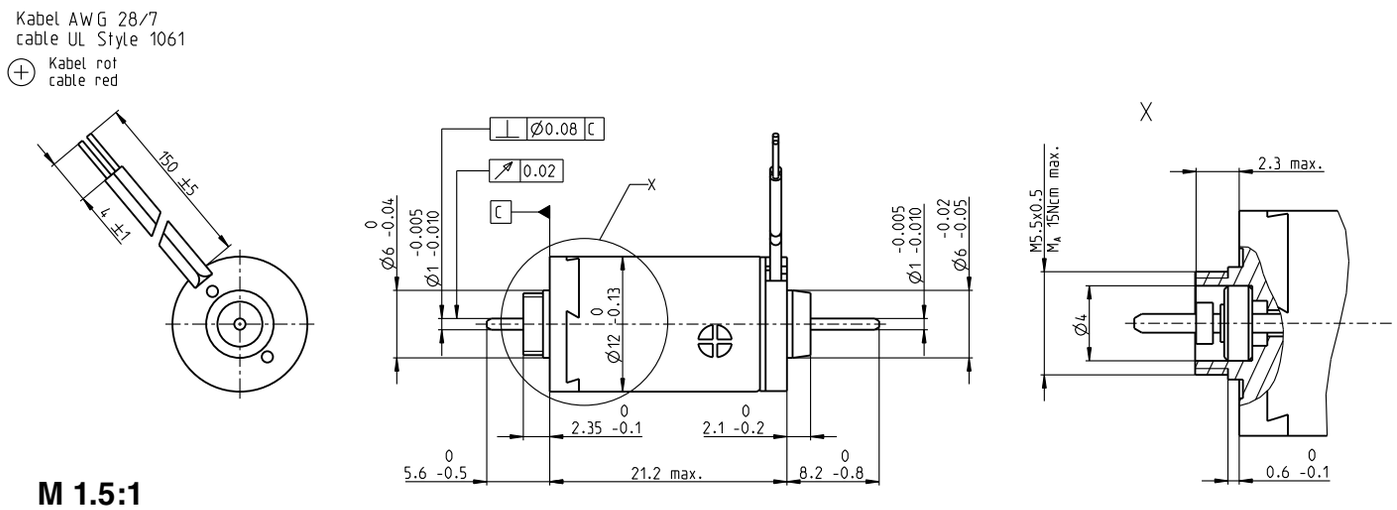

M 1.5:1

Stock program
Standard program
Special program (on request)

Part Numbers

			200938	265389	265390	265391	265392	265393
Motor Data								
	Values at nominal voltage							
1	Nominal voltage	V	3	4.5	6	9	12	15
2	No load speed	rpm	13700	11700	12600	11900	12100	13500
3	No load current	mA	34.5	18.8	15.5	9.63	7.38	6.88
4	Nominal speed	rpm	6000	4390	5280	4480	4620	5050
5	Nominal torque (max. continuous torque)	mNm	0.872	0.937	0.923	0.918	0.908	0.78
6	Nominal current (max. continuous current)	A	0.464	0.282	0.225	0.141	0.106	0.0835
7	Stall torque	mNm	1.58	1.55	1.63	1.52	1.52	1.29
8	Starting current	A	0.789	0.438	0.374	0.22	0.168	0.129
9	Max. efficiency	%	63	63	64	63	63	60
	Characteristics							
10	Terminal resistance	Ω	3.8	10.3	16	40.9	71.6	116
11	Terminal inductance	mH	0.0851	0.263	0.402	1.01	1.74	2.13
12	Torque constant	mNm/A	2.01	3.53	4.36	6.92	9.06	10
13	Speed constant	rpm/V	4760	2710	2190	1380	1050	952
14	Speed / torque gradient	rpm/mNm	9030	7880	8060	8170	8330	11000
15	Mechanical time constant	ms	20.6	20.3	20.4	20.4	20.5	21.1
16	Rotor inertia	gcm²	0.218	0.246	0.241	0.238	0.235	0.183

Specifications

	Thermal data	
17	Thermal resistance housing-ambient	44.5 K/W
18	Thermal resistance winding-housing	15 K/W
19	Thermal time constant winding	5.03 s
20	Thermal time constant motor	267 s
21	Ambient temperature	-30…+65°C
22	Max. permissible winding temperature	+85°C
	Mechanical data (sleeve bearings)	
23	Max. permissible speed	14000 rpm
24	Axial play	0.05 - 0.15 mm
25	Radial play	0.012 mm
26	Max. axial load (dynamic)	0.15 N
27	Max. force for press fits (static)	15 N
	(static, shaft supported)	70 N
28	Max. radial loading, 4 mm from flange	0.4 N
	Other specifications	
29	Number of pole pairs	1
30	Number of commutator segments	7
31	Weight of motor	12 g

CLL = Capacitor Long Life
Alignment of the electronic connections not specified.

Values listed in the table are nominal.
Explanation of the figures on page 79.

Operating Range

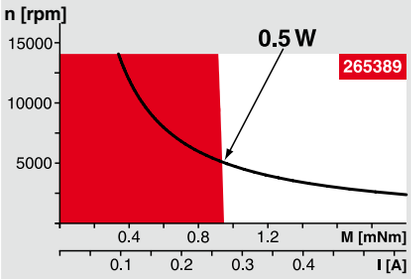

Comments

Continuous operation
In observation of above listed thermal resistance (lines 17 and 18) the maximum permissible winding temperature will be reached during continuous operation at 25°C ambient.
= Thermal limit.

Short term operation
The motor may be briefly overloaded (recurring).

Assigned power rating

maxon Modular System

Overview on page 20–25

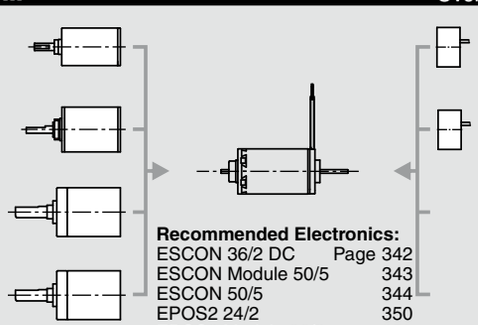

Planetary Gearhead
∅10 mm
0.01 - 0.15 Nm
Page 245

Spur Gearhead
∅12 mm
0.008 - 0.025 Nm
Page 246

Planetary Gearhead
∅13 mm
0.05 - 0.15 Nm
Page 247

Planetary Gearhead
∅13 mm
0.2 - 0.35 Nm
Page 248

Recommended Electronics:

ESCON 36/2 DC	Page 342
ESCON Module 50/5	343
ESCON 50/5	344
EPOS2 24/2	350
EPOS2 Module 36/2	350
EPOS3 70/10 EtherCAT	357
MAXPOS 50/5	360
Notes	**22**

Encoder MR
16 CPT,
2 channels
Page 312

Encoder MR
64 - 256 CPT,
2 channels
Page 313

A-max 16 ∅16 mm, Precious Metal Brushes CLL, 2 Watt

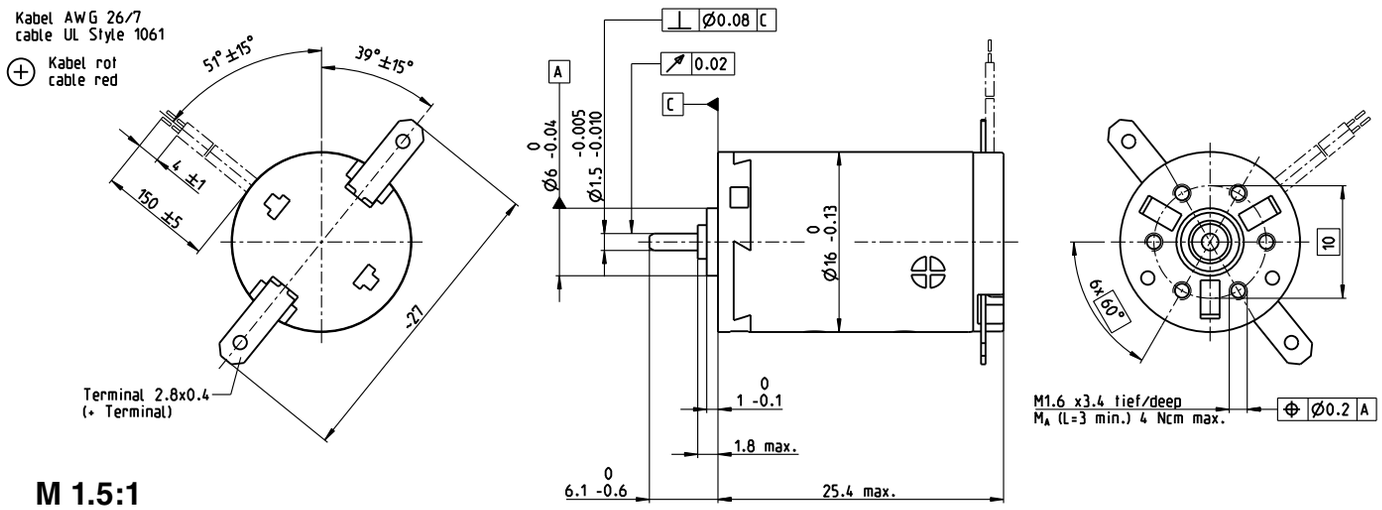

M 1.5:1

Stock program
Standard program
Special program (on request)

Part Numbers

with terminals		110041	110042	110043	110044	110045	110046	110047	110048	110049	110050
with cables		139820	352815	134844	231379	220514	304672	352823	352816	260678	352817
Motor Data											
Values at nominal voltage											
1 Nominal voltage	V	1.5	3	6	9	12	15	18	21	24	30
2 No load speed	rpm	10800	12300	10100	12300	12300	13200	14100	13700	13800	11400
3 No load current	mA	61.4	38.1	13.9	12.7	9.54	8.57	7.99	6.53	5.83	3.37
4 Nominal speed	rpm	9360	8810	4530	6700	6660	7590	8480	8040	8120	5480
5 Nominal torque (max. continuous torque)	mNm	0.712	1.3	2.22	2.19	2.17	2.17	2.15	2.14	2.11	2.08
6 Nominal current (max. continuous current)	A	0.6	0.6	0.408	0.327	0.243	0.209	0.185	0.153	0.134	0.0864
7 Stall torque	mNm	4.79	4.51	4.03	4.82	4.77	5.16	5.44	5.22	5.12	4.04
8 Starting current	A	3.66	1.97	0.723	0.702	0.52	0.482	0.453	0.362	0.315	0.164
9 Max. efficiency	%	77	75	75	76	76	76	76	76	76	74
Characteristics											
10 Terminal resistance	Ω	0.41	1.52	8.3	12.8	23.1	31.1	39.7	57.9	76.2	183
11 Terminal inductance	mH	0.017	0.0519	0.306	0.467	0.831	1.13	1.42	2.05	2.61	6.01
12 Torque constant	mNm/A	1.31	2.29	5.57	6.88	9.17	10.7	12	14.4	16.3	24.7
13 Speed constant	rpm/V	7290	4170	1720	1390	1040	893	795	663	587	387
14 Speed / torque gradient	rpm/mNm	2280	2770	2560	2590	2620	2600	2630	2670	2750	2880
15 Mechanical time constant	ms	25.3	23.8	23.3	23.3	23.3	23.4	23.5	23.4	23.5	23.9
16 Rotor inertia	gcm^2	1.06	0.82	0.868	0.859	0.849	0.859	0.852	0.838	0.816	0.793

Specifications

Thermal data	
17 Thermal resistance housing-ambient	29.8 K/W
18 Thermal resistance winding-housing	5.5 K/W
19 Thermal time constant winding	3.55 s
20 Thermal time constant motor	165 s
21 Ambient temperature	-30…+65°C
22 Max. permissible winding temperature	+85°C
Mechanical data (sleeve bearings)	
23 Max. permissible speed	19000 rpm
24 Axial play	0.05 - 0.15 mm
25 Radial play	0.012 mm
26 Max. axial load (dynamic)	0.8 N
27 Max. force for press fits (static)	35 N
28 Max. radial loading, 5 mm from flange	1.4 N
Mechanical data (ball bearings)	
23 Max. permissible speed	19000 rpm
24 Axial play	0.05 - 0.15 mm
25 Radial play	0.025 mm
26 Max. axial load (dynamic)	2.2 N
27 Max. force for press fits (static)	30 N
28 Max. radial loading, 5 mm from flange	7.8 N
Other specifications	
29 Number of pole pairs	1
30 Number of commutator segments	7
31 Weight of motor	21 g

CLL = Capacitor Long Life

Values listed in the table are nominal.
Explanation of the figures on page 79.

Option
Ball bearings in place of sleeve bearings
Without CLL

Operating Range

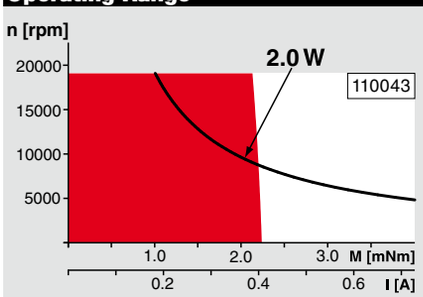

Comments

Continuous operation
In observation of above listed thermal resistance (lines 17 and 18) the maximum permissible winding temperature will be reached during continuous operation at 25°C ambient.
= Thermal limit.

Short term operation
The motor may be briefly overloaded (recurring).

Assigned power rating

maxon Modular System

Overview on page 20–25

Spur Gearhead
∅16 mm
0.01 - 0.1 Nm
Page 250–253

Planetary Gearhead
∅16 mm
0.1 - 0.6 Nm
Page 254/255

Spindle Drive
∅16 mm
Page 296–298

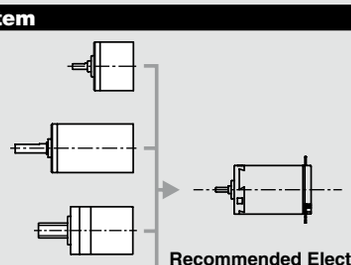

Recommended Electronics:

ESCON 36/2 DC	Page 342
ESCON Module 50/5	343
ESCON 50/5	344
Notes	**22**

A-max 16 ∅16 mm, Precious Metal Brushes CLL, 1.2 Watt

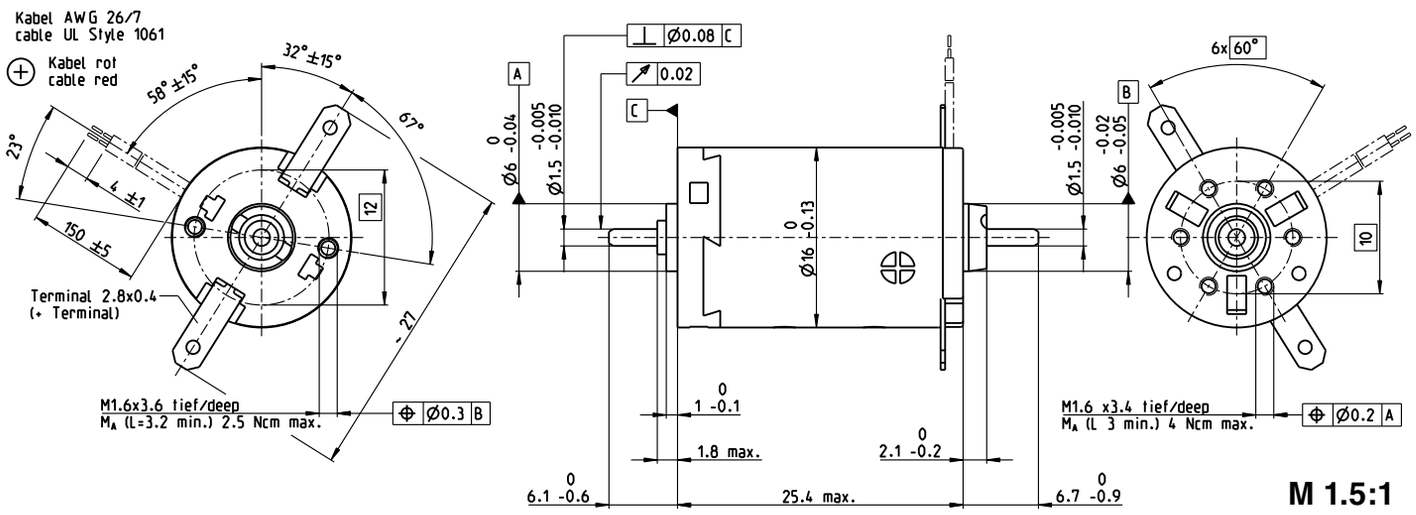

Stock program
Standard program
Special program (on request)

Part Numbers

with terminals	110051	110052	**110053**	110054	**110055**	110056	110057	110058	110059	110060
with cables	139823	352825	352826	352827	352828	352829	352830	352831	352832	352833

Motor Data

	Values at nominal voltage											
1	Nominal voltage	V	1.2	2.4	6	7.2	9	12	15	18	18	30
2	No load speed	rpm	8560	9730	10000	9740	9120	10400	11600	11600	10300	11300
3	No load current	mA	73.9	44.1	18.3	14.7	10.8	9.69	8.99	7.49	6.34	4.33
4	Nominal speed	rpm	7170	6310	4540	4200	3530	4900	6090	6050	4580	5500
5	Nominal torque (max. continuous torque)	mNm	0.694	1.29	2.18	2.17	2.16	2.16	2.13	2.12	2.09	2.04
6	Nominal current (max. continuous current)	A	0.6	0.6	0.407	0.327	0.244	0.21	0.185	0.153	0.134	0.0862
7	Stall torque	mNm	3.83	3.61	4.03	3.86	3.57	4.13	4.54	4.48	3.84	4.04
8	Starting current	A	2.93	1.58	0.723	0.561	0.39	0.386	0.378	0.311	0.236	0.164
9	Max. efficiency	%	71	70	71	71	70	71	72	72	71	71
	Characteristics											
10	Terminal resistance	Ω	0.41	1.52	8.3	12.8	23.1	31.1	39.7	57.9	76.2	183
11	Terminal inductance	mH	0.017	0.0519	0.306	0.467	0.831	1.13	1.42	2.05	2.61	6.01
12	Torque constant	mNm/A	1.31	2.29	5.57	6.88	9.17	10.7	12	14.4	16.3	24.7
13	Speed constant	rpm/V	7290	4170	1720	1390	1040	893	795	663	587	387
14	Speed / torque gradient	rpm/mNm	2280	2770	2560	2590	2620	2600	2630	2670	2750	2880
15	Mechanical time constant	ms	25.3	23.7	23.2	23.3	23.3	23.3	23.4	23.3	23.4	23.8
16	Rotor inertia	gcm²	1.06	0.818	0.866	0.857	0.847	0.857	0.85	0.836	0.814	0.791

Specifications

	Thermal data	
17	Thermal resistance housing-ambient	29.8 K/W
18	Thermal resistance winding-housing	5.5 K/W
19	Thermal time constant winding	3.55 s
20	Thermal time constant motor	165 s
21	Ambient temperature	-30…+65°C
22	Max. permissible winding temperature	+85°C
	Mechanical data (sleeve bearings)	
23	Max. permissible speed	11000 rpm
24	Axial play	0.05 - 0.15 mm
25	Radial play	0.012 mm
26	Max. axial load (dynamic)	0.8 N
27	Max. force for press fits (static)	35 N
	(static, shaft supported)	280 N
28	Max. radial loading, 5 mm from flange	1.4 N
	Mechanical data (ball bearings)	
23	Max. permissible speed	11000 rpm
24	Axial play	0.05 - 0.15 mm
25	Radial play	0.025 mm
26	Max. axial load (dynamic)	2.2 N
27	Max. force for press fits (static)	30 N
	(static, shaft supported)	280 N
28	Max. radial loading, 5 mm from flange	7.8 N
	Other specifications	
29	Number of pole pairs	1
30	Number of commutator segments	7
31	Weight of motor	22 g

CLL = Capacitor Long Life

Values listed in the table are nominal.
Explanation of the figures on page 79.

Option
Ball bearings in place of sleeve bearings
Without CLL

Operating Range

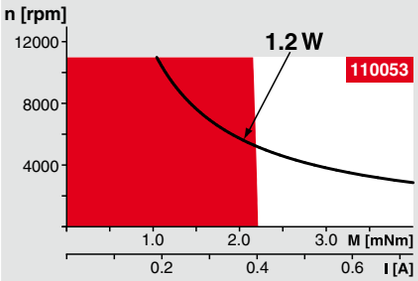

Comments

Continuous operation
In observation of above listed thermal resistance (lines 17 and 18) the maximum permissible winding temperature will be reached during continuous operation at 25°C ambient.
= Thermal limit.

Short term operation
The motor may be briefly overloaded (recurring).

Assigned power rating

maxon Modular System

Overview on page 20–25

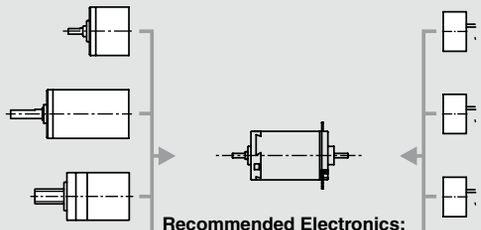

Spur Gearhead
∅16 mm
0.01 - 0.1 Nm
Page 250–253

Planetary Gearhead
∅16 mm
0.1 - 0.6 Nm
Page 254/255

Spindle Drive
∅16 mm
Page 296–298

Recommended Electronics:

ESCON 36/2 DC	Page 342
ESCON Module 50/5	343
ESCON 50/5	344
EPOS2 24/2	350
EPOS2 Module 36/2	350
EPOS3 70/10 EtherCAT	357
MAXPOS 50/5	360
Notes	**22**

Encoder MR
32 CPT,
2 / 3 channels
Page 315

Encoder MR
128 / 256 / 512 CPT,
2 / 3 channels
Page 317

Encoder MEnc
∅13 mm
16 CPT, 2 channels
Page 334

A-max 16 ∅16 mm, Graphite Brushes, 2 Watt

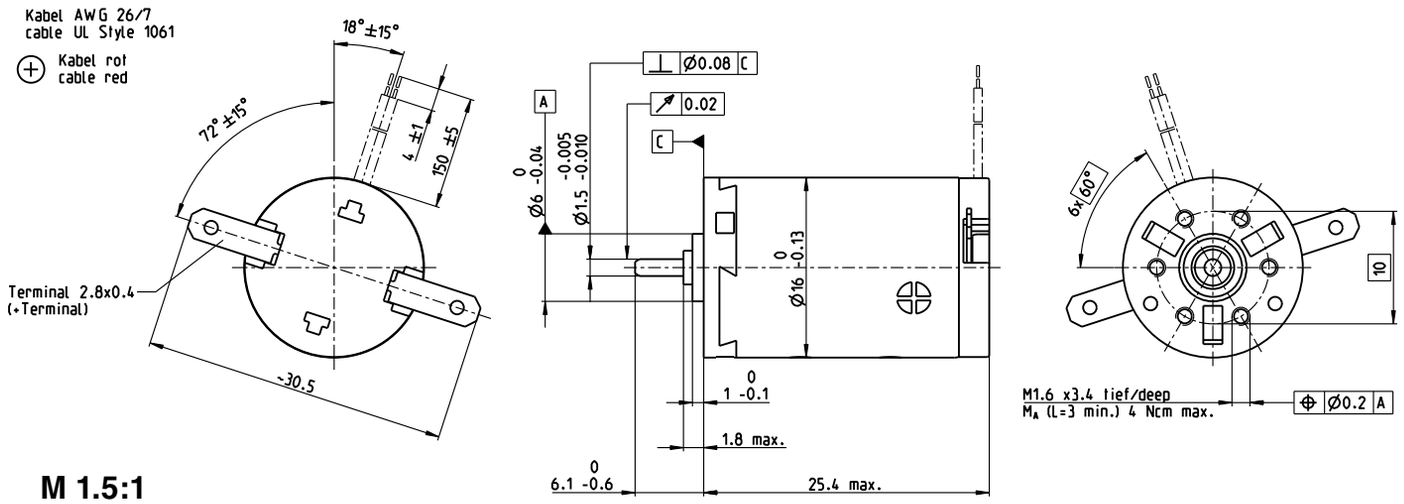

M 1.5:1

Stock program
Standard program
Special program (on request)

Part Numbers

with terminals	110061	110062	110063	**110064**	110065	110066	110067	110068	**110069**	110070	
with cables	139821	352853	352854	352855	325083	352856	205903	352857	266076	352858	

Motor Data

	Values at nominal voltage											
1	Nominal voltage	V	1.5	3	6	9	12	14	15	18	21	30
2	No load speed	rpm	10200	11500	9360	11500	11500	11500	11000	10900	11300	10500
3	No load current	mA	282	164	65.6	54.6	41	35.1	31.1	25.9	23	15
4	Nominal speed	rpm	9010	8060	3280	5510	5460	5500	4860	4810	5100	4180
5	Nominal torque (max. continuous torque)	mNm	0.579	1.29	2.42	2.36	2.34	2.35	2.35	2.33	2.28	2.24
6	Nominal current (max. continuous current)	A	0.72	0.72	0.495	0.394	0.293	0.253	0.224	0.186	0.162	0.105
7	Stall torque	mNm	5.36	4.65	4.05	4.84	4.78	4.82	4.54	4.48	4.49	4.04
8	Starting current	A	4.1	2.03	0.727	0.704	0.521	0.451	0.378	0.311	0.276	0.164
9	Max. efficiency	%	54	51	49	52	52	52	51	51	51	48
	Characteristics											
10	Terminal resistance	Ω	0.366	1.48	8.25	12.8	23	31.1	39.7	57.9	76.1	183
11	Terminal inductance	mH	0.0169	0.0519	0.306	0.467	0.83	1.13	1.42	2.05	2.61	6.01
12	Torque constant	mNm/A	1.31	2.29	5.57	6.88	9.17	10.7	12	14.4	16.3	24.7
13	Speed constant	rpm/V	7290	4170	1720	1390	1040	893	795	663	587	387
14	Speed / torque gradient	rpm/mNm	2040	2690	2540	2580	2620	2590	2630	2660	2750	2880
15	Mechanical time constant	ms	22.6	23.1	23.1	23.2	23.3	23.3	23.5	23.4	23.5	23.9
16	Rotor inertia	gcm²	1.06	0.82	0.868	0.859	0.849	0.859	0.852	0.838	0.816	0.793

Specifications

	Thermal data	
17	Thermal resistance housing-ambient	29.8 K/W
18	Thermal resistance winding-housing	5.5 K/W
19	Thermal time constant winding	4.42 s
20	Thermal time constant motor	165 s
21	Ambient temperature	-30…+85°C
22	Max. permissible winding temperature	+125°C
	Mechanical data (sleeve bearings)	
23	Max. permissible speed	11900 rpm
24	Axial play	0.05 - 0.15 mm
25	Radial play	0.012 mm
26	Max. axial load (dynamic)	0.8 N
27	Max. force for press fits (static)	35 N
28	Max. radial loading, 5 mm from flange	1.4 N
	Mechanical data (ball bearings)	
23	Max. permissible speed	11900 rpm
24	Axial play	0.05 - 0.15 mm
25	Radial play	0.025 mm
26	Max. axial load (dynamic)	2.2 N
27	Max. force for press fits (static)	30 N
28	Max. radial loading, 5 mm from flange	7.8 N
	Other specifications	1
29	Number of pole pairs	7
30	Number of commutator segments	21 g
31	Weight of motor	

Values listed in the table are nominal.
Explanation of the figures on page 79.

Option
Ball bearings in place of sleeve bearings

Operating Range

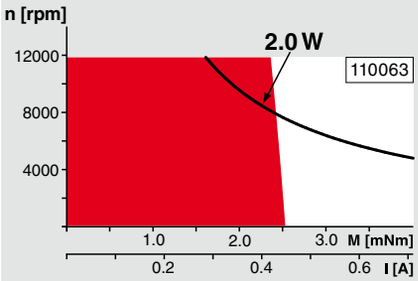

Comments

Continuous operation
In observation of above listed thermal resistance (lines 17 and 18) the maximum permissible winding temperature will be reached during continuous operation at 25°C ambient.
= Thermal limit.

Short term operation
The motor may be briefly overloaded (recurring).

Assigned power rating

maxon Modular System

Overview on page 20–25

Spur Gearhead
∅16 mm
0.01 - 0.1 Nm
Page 250–253

Planetary Gearhead
∅16 mm
0.1 - 0.6 Nm
Page 254/255

Spindle Drive
∅16 mm
Page 296–298

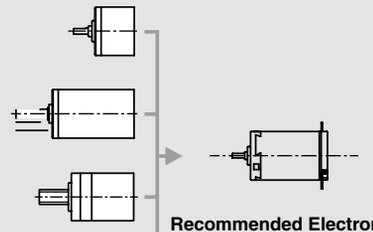

Recommended Electronics:

ESCON 36/2 DC	Page 342
ESCON Module 50/5	343
ESCON 50/5	344
Notes	**22**

A-max 16 ∅16 mm, Graphite Brushes, 2 Watt

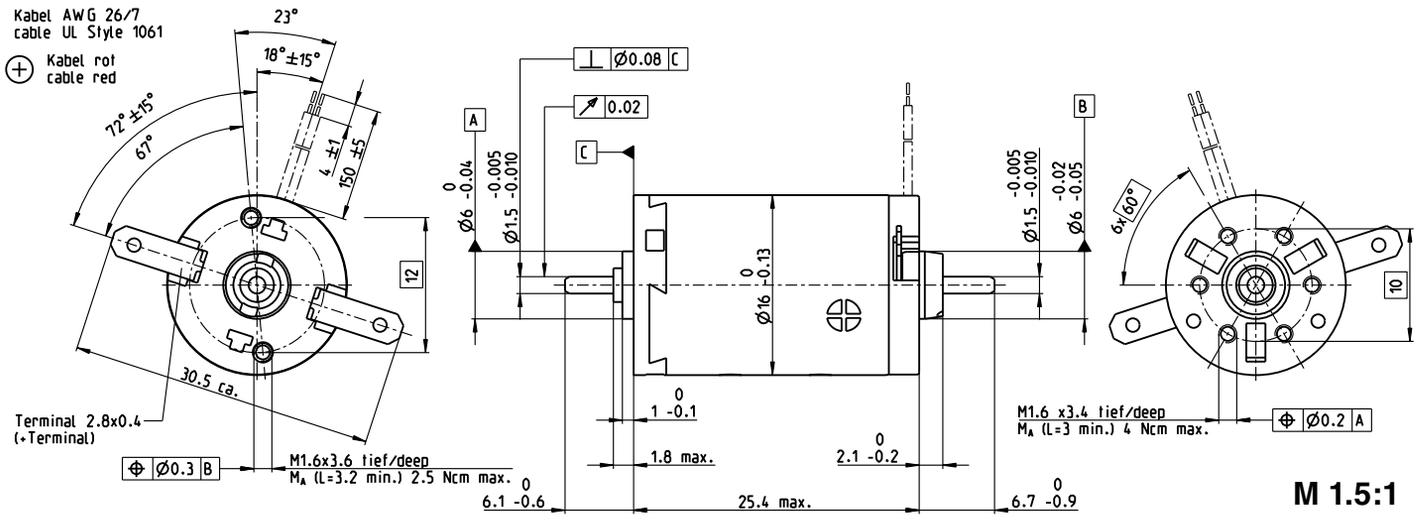

Stock program
Standard program
Special program (on request)

Part Numbers

with terminals	110071	110072	110073	110074	110075	110076	110077	110078	110079	110080
with cables	139825	352870	352871	352872	352873	352874	352875	352876	352877	352878

Motor Data

	Values at nominal voltage										
1	Nominal voltage	V	1.5	3	6	9	12	14	15	18	21	30
2	No load speed	rpm	10200	11500	9360	11500	11500	11500	11000	10900	11300	10500
3	No load current	mA	282	164	65.6	54.6	41	35.1	31.1	25.9	23	15
4	Nominal speed	rpm	9010	8060	3280	5510	5460	5500	4860	4810	5100	4180
5	Nominal torque (max. continuous torque)	mNm	0.579	1.29	2.42	2.36	2.34	2.35	2.35	2.33	2.28	2.24
6	Nominal current (max. continuous current)	A	0.72	0.72	0.495	0.394	0.293	0.253	0.224	0.186	0.162	0.105
7	Stall torque	mNm	5.36	4.65	4.05	4.84	4.78	4.82	4.54	4.48	4.49	4.04
8	Starting current	A	4.1	2.03	0.727	0.704	0.521	0.451	0.378	0.311	0.276	0.164
9	Max. efficiency	%	54	51	49	52	52	52	51	51	51	48
	Characteristics											
10	Terminal resistance	Ω	0.366	1.48	8.25	12.8	23	31.1	39.7	57.9	76.1	183
11	Terminal inductance	mH	0.0169	0.0519	0.306	0.467	0.83	1.13	1.42	2.05	2.61	6.01
12	Torque constant	mNm/A	1.31	2.29	5.57	6.88	9.17	10.7	12	14.4	16.3	24.7
13	Speed constant	rpm/V	7290	4170	1720	1390	1040	893	795	663	587	387
14	Speed / torque gradient	rpm/mNm	2040	2690	2540	2580	2620	2590	2630	2660	2750	2880
15	Mechanical time constant	ms	22.6	23.1	23.1	23.2	23.3	23.3	23.5	23.4	23.5	23.9
16	Rotor inertia	gcm²	1.06	0.82	0.868	0.859	0.849	0.859	0.852	0.838	0.816	0.793

Specifications

	Thermal data	
17	Thermal resistance housing-ambient	29.8 K/W
18	Thermal resistance winding-housing	5.5 K/W
19	Thermal time constant winding	4.42 s
20	Thermal time constant motor	165 s
21	Ambient temperature	-30…+85°C
22	Max. permissible winding temperature	+125°C
	Mechanical data (sleeve bearings)	
23	Max. permissible speed	11900 rpm
24	Axial play	0.05 - 0.15 mm
25	Radial play	0.012 mm
26	Max. axial load (dynamic)	0.8 N
27	Max. force for press fits (static)	35 N
	(static, shaft supported)	280 N
28	Max. radial loading, 5 mm from flange	1.4 N
	Mechanical data (ball bearings)	
23	Max. permissible speed	11900 rpm
24	Axial play	0.05 - 0.15 mm
25	Radial play	0.025 mm
26	Max. axial load (dynamic)	2.2 N
27	Max. force for press fits (static)	30 N
	(static, shaft supported)	280 N
28	Max. radial loading, 5 mm from flange	7.8 N
	Other specifications	
29	Number of pole pairs	1
30	Number of commutator segments	7
31	Weight of motor	22 g

Values listed in the table are nominal.
Explanation of the figures on page 79.

Option
Ball bearings in place of sleeve bearings

Operating Range

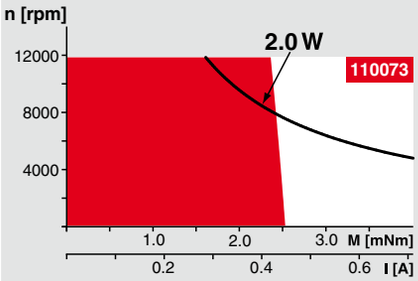

Comments

Continuous operation
In observation of above listed thermal resistance (lines 17 and 18) the maximum permissible winding temperature will be reached during continuous operation at 25°C ambient.
= Thermal limit.

Short term operation
The motor may be briefly overloaded (recurring).

Assigned power rating

maxon Modular System

Overview on page 20–25

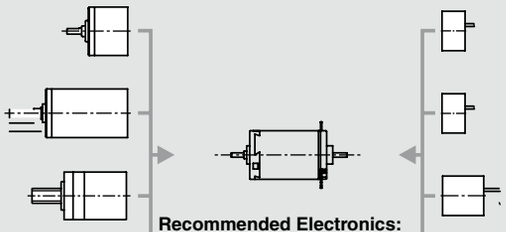

Spur Gearhead
∅16 mm
0.01 - 0.1 Nm
Page 250–253

Planetary Gearhead
∅16 mm
0.1 - 0.6 Nm
Page 254/255

Spindle Drive
∅16 mm
Page 296–298

Recommended Electronics:

ESCON 36/2 DC	Page 342
ESCON Module 50/5	343
ESCON 50/5	344
EPOS2 24/2	350
EPOS2 Module 36/2	350
EPOS3 70/10 EtherCAT	357
MAXPOS 50/5	360
Notes	**22**

Encoder MR
32 CPT,
2 / 3 channels
Page 315

Encoder MR
128 / 256 / 512 CPT,
2 / 3 channels
Page 317

Encoder MEnc
∅13 mm
16 CPT, 2 channels
Page 334

A-max 19 ∅19 mm, Precious Metal Brushes CLL, 2.5 Watt

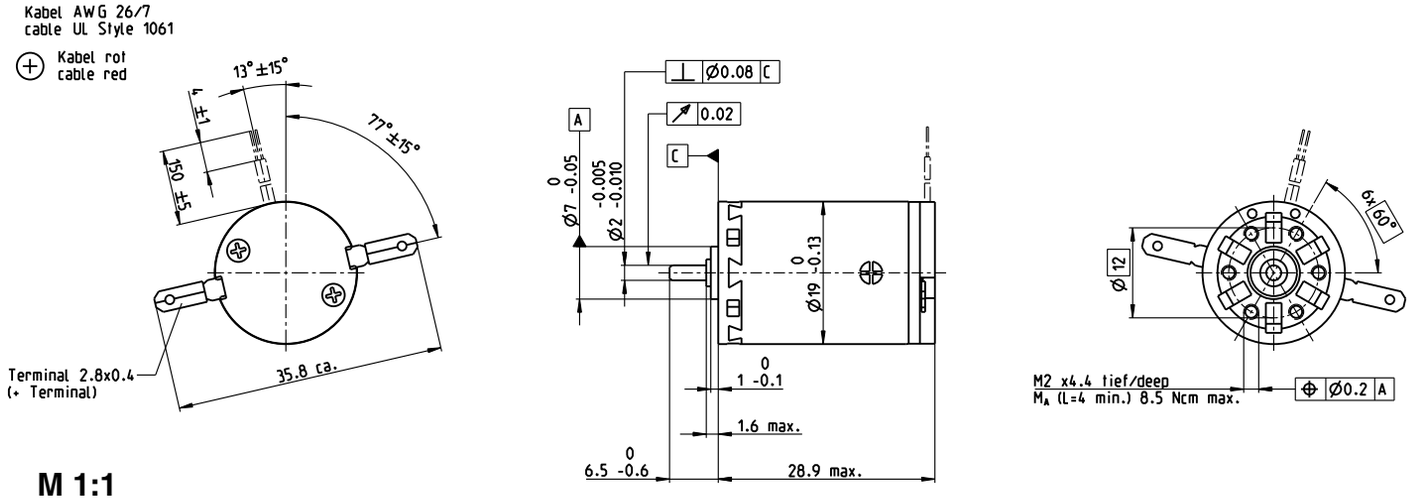

M 1:1

Stock program
Standard program
Special program (on request)

Part Numbers

with terminals	110081	110082	110083	**110084**	110085	110086	**110087**	110088	110089	
with cables	139828	202411	352922	202412	352923	233453	238388	267427	235373	

Motor Data

	Values at nominal voltage										
1	Nominal voltage	V	1.5	3.6	4.5	6	9	12	15	18	24
2	No load speed	rpm	8040	10800	9420	7790	9220	10300	10300	9300	8870
3	No load current	mA	78	52.9	33.6	18.6	16.2	14.6	11.7	8.25	5.73
4	Nominal speed	rpm	6840	8080	5710	4000	5470	6510	6500	5380	4900
5	Nominal torque (max. continuous torque)	mNm	1.35	2.48	3.61	3.59	3.59	3.49	3.48	3.42	3.39
6	Nominal current (max. continuous current)	A	0.84	0.84	0.83	0.51	0.403	0.33	0.264	0.195	0.138
7	Stall torque	mNm	7.79	9.43	9	7.36	8.83	9.47	9.45	8.16	7.63
8	Starting current	A	4.44	3.02	2.01	1.02	0.963	0.867	0.692	0.45	0.301
9	Max. efficiency	%	76	76	77	76	76	76	76	76	75
	Characteristics										
10	Terminal resistance	Ω	0.338	1.19	2.24	5.88	9.34	13.8	21.7	40	79.7
11	Terminal inductance	mH	0.0186	0.0587	0.121	0.314	0.506	0.719	1.12	1.98	3.87
12	Torque constant	mNm/A	1.76	3.12	4.49	7.22	9.17	10.9	13.7	18.1	25.4
13	Speed constant	rpm/V	5440	3060	2130	1320	1040	874	699	526	377
14	Speed / torque gradient	rpm/mNm	1050	1170	1060	1080	1060	1110	1110	1160	1180
15	Mechanical time constant	ms	27.9	25.4	24.3	24.2	24.1	24.2	24.3	25	24.6
16	Rotor inertia	gcm²	2.54	2.07	2.18	2.14	2.16	2.09	2.09	2.06	1.99

Specifications

	Thermal data	
17	Thermal resistance housing-ambient	21.3 K/W
18	Thermal resistance winding-housing	10.5 K/W
19	Thermal time constant winding	11 s
20	Thermal time constant motor	201 s
21	Ambient temperature	-30…+65°C
22	Max. permissible winding temperature	+85°C
	Mechanical data (sleeve bearings)	
23	Max. permissible speed	16000 rpm
24	Axial play	0.05 - 0.15 mm
25	Radial play	0.012 mm
26	Max. axial load (dynamic)	1 N
27	Max. force for press fits (static)	80 N
28	Max. radial loading, 5 mm from flange	2.7 N
	Mechanical data (ball bearings)	
23	Max. permissible speed	16000 rpm
24	Axial play	0.05 - 0.15 mm
25	Radial play	0.025 mm
26	Max. axial load (dynamic)	3.3 N
27	Max. force for press fits (static)	45 N
28	Max. radial loading, 5 mm from flange	11.9 N
	Other specifications	
29	Number of pole pairs	1
30	Number of commutator segments	9
31	Weight of motor	33 g

CLL = Capacitor Long Life

Values listed in the table are nominal.
Explanation of the figures on page 79.

Option
Ball bearings in place of sleeve bearings
Without CLL

Operating Range

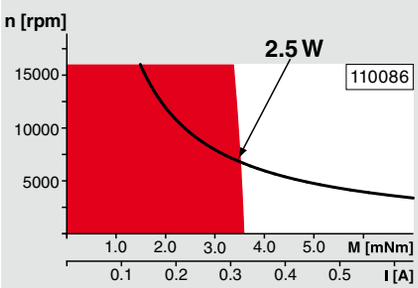

Comments

Continuous operation
In observation of above listed thermal resistance (lines 17 and 18) the maximum permissible winding temperature will be reached during continuous operation at 25°C ambient.
= Thermal limit.

Short term operation
The motor may be briefly overloaded (recurring).

Assigned power rating

maxon Modular System

Overview on page 20–25

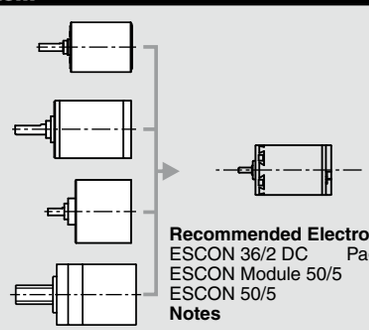

Planetary Gearhead
∅19 mm
0.1 - 0.3 Nm
Page 257

Planetary Gearhead
∅22 mm
0.1 - 2.0 Nm
Page 262/264

Spur Gearhead
∅24 mm
0.1 Nm
Page 269

Spindle Drive
∅22 mm
Page 299/300

Recommended Electronics:

ESCON 36/2 DC	Page 342
ESCON Module 50/5	343
ESCON 50/5	344
Notes	**22**

A-max 19 ∅19 mm, Precious Metal Brushes CLL, 1.5 Watt

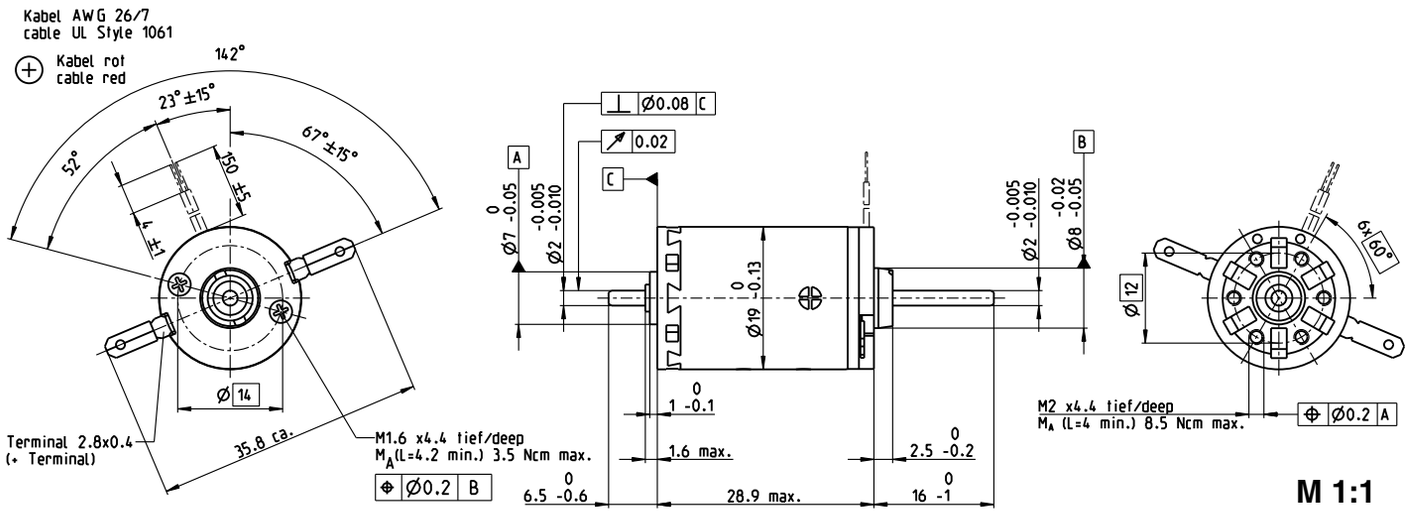

Stock program
Standard program
Special program (on request)

Part Numbers

with terminals	110090	110091	110092	110093	110094	110095	110096	110097	110098
with cables	139832	352925	352926	352927	352928	352929	352930	315468	352931

Motor Data

	Values at nominal voltage										
1	Nominal voltage	V	1.2	2.4	3	4.8	6	7.2	9	12	18
2	No load speed	rpm	6390	7160	6230	6190	6090	6130	6130	6140	6590
3	No load current	mA	88.3	52	34.2	21.2	16.6	14	11.2	8.41	6.19
4	Nominal speed	rpm	5210	4410	2500	2410	2330	2290	2280	2210	2630
5	Nominal torque (max. continuous torque)	mNm	1.33	2.49	3.62	3.57	3.59	3.51	3.51	3.43	3.38
6	Nominal current (max. continuous current)	A	0.84	0.84	0.833	0.511	0.405	0.332	0.265	0.195	0.138
7	Stall torque	mNm	6.23	6.28	6	5.89	5.89	5.68	5.67	5.44	5.73
8	Starting current	A	3.55	2.01	1.34	0.816	0.642	0.52	0.415	0.3	0.226
9	Max. efficiency	%	72	71	71	71	71	71	71	70	70
	Characteristics										
10	Terminal resistance	Ω	0.338	1.19	2.24	5.88	9.34	13.8	21.7	40	79.7
11	Terminal inductance	mH	0.0186	0.0587	0.121	0.314	0.506	0.719	1.12	1.98	3.87
12	Torque constant	mNm/A	1.76	3.12	4.49	7.22	9.17	10.9	13.7	18.1	25.4
13	Speed constant	rpm/V	5440	3060	2130	1320	1040	874	699	526	377
14	Speed / torque gradient	rpm/mNm	1050	1170	1060	1080	1060	1110	1110	1160	1180
15	Mechanical time constant	ms	27.9	25.4	24.3	24.2	24.1	24.3	24.3	25	24.7
16	Rotor inertia	gcm²	2.54	2.08	2.18	2.15	2.17	2.09	2.09	2.06	1.99

Specifications

	Thermal data	
17	Thermal resistance housing-ambient	21.3 K/W
18	Thermal resistance winding-housing	10.5 K/W
19	Thermal time constant winding	11 s
20	Thermal time constant motor	201 s
21	Ambient temperature	-30…+65°C
22	Max. permissible winding temperature	+85°C
	Mechanical data (sleeve bearings)	
23	Max. permissible speed	10000 rpm
24	Axial play	0.05 - 0.15 mm
25	Radial play	0.012 mm
26	Max. axial load (dynamic)	1 N
27	Max. force for press fits (static)	80 N
	(static, shaft supported)	440 N
28	Max. radial loading, 5 mm from flange	2.7 N
	Mechanical data (ball bearings)	
23	Max. permissible speed	10000 rpm
24	Axial play	0.05 - 0.15 mm
25	Radial play	0.025 mm
26	Max. axial load (dynamic)	3.3 N
27	Max. force for press fits (static)	45 N
	(static, shaft supported)	440 N
28	Max. radial loading, 5 mm from flange	11.9 N
	Other specifications	
29	Number of pole pairs	1
30	Number of commutator segments	9
31	Weight of motor g	34 g

CLL = Capacitor Long Life

Values listed in the table are nominal.
Explanation of the figures on page 79.

Option
Ball bearings in place of sleeve bearings
Without CLL

Operating Range

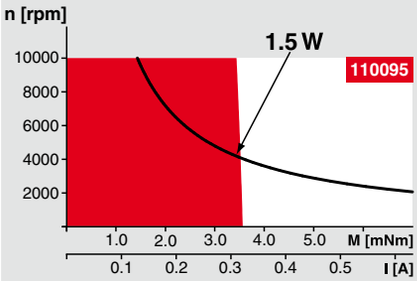

Comments

Continuous operation
In observation of above listed thermal resistance (lines 17 and 18) the maximum permissible winding temperature will be reached during continuous operation at 25°C ambient.
= Thermal limit.

Short term operation
The motor may be briefly overloaded (recurring).

Assigned power rating

maxon Modular System

Overview on page 20–25

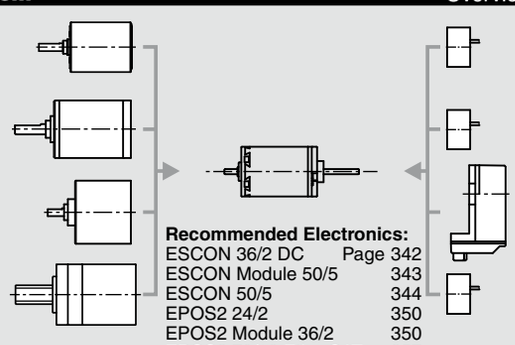

Planetary Gearhead
∅19 mm
0.1 - 0.3 Nm
Page 257

Planetary Gearhead
∅22 mm
0.1 - 2.0 Nm
Page 262/264

Spur Gearhead
∅24 mm
0.1 Nm
Page 269

Spindle Drive
∅22 mm
Page 299/300

Recommended Electronics:

ESCON 36/2 DC	Page 342
ESCON Module 50/5	343
ESCON 50/5	344
EPOS2 24/2	350
EPOS2 Module 36/2	350
EPOS3 70/10 EtherCAT	357
MAXPOS 50/5	360
Notes	**22**

Encoder MR
32 CPT,
2 / 3 channels
Page 315

Encoder MR
128 / 256 / 512 CPT,
2 / 3 channels
Page 317

Encoder Enc
22 mm
100 CPT, 2 channels
Page 324

Encoder MEnc
∅13 mm
16 CPT, 2 channels
Page 334

A-max 19 ∅19 mm, Graphite Brushes, 2.5 Watt

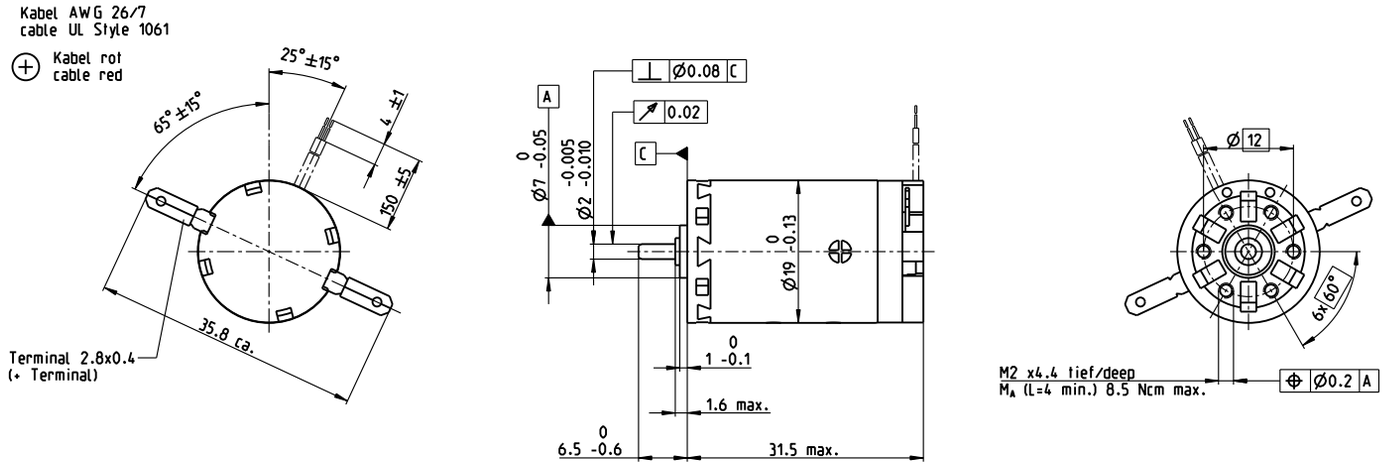

M 1:1

Stock program
Standard program
Special program (on request)

Part Numbers

with terminals	249982	249983	249984	249985	249986	249987	249988	249989	249990
with cables	240133	352942	310977	352943	352944	352945	352946	352947	310980

Motor Data

	Values at nominal voltage										
1	Nominal voltage	V	2.4	3.6	6	7.2	9	12	15	18	24
2	No load speed	rpm	12400	10400	12200	8980	8850	9930	9930	8910	8470
3	No load current	mA	292	158	114	66.1	51.9	44.6	35.7	26.3	18.6
4	Nominal speed	rpm	11700	8350	9310	4750	4630	5670	5670	4520	4020
5	Nominal torque (max. continuous torque)	mNm	0.759	1.78	2.75	3.98	4.02	3.89	3.89	3.83	3.8
6	Nominal current (max. continuous current)	A	0.72	0.72	0.72	0.612	0.485	0.397	0.317	0.235	0.167
7	Stall torque	mNm	14.1	9.66	12.1	8.84	8.83	9.47	9.44	8.16	7.63
8	Starting current	A	8.04	3.09	2.71	1.23	0.963	0.867	0.691	0.45	0.301
9	Max. efficiency	%	64	59	63	59	59	60	60	58	57
	Characteristics										
10	Terminal resistance	Ω	0.299	1.16	2.22	5.88	9.35	13.8	21.7	40	79.8
11	Terminal inductance	mH	0.0186	0.0587	0.121	0.314	0.506	0.719	1.12	1.98	3.87
12	Torque constant	mNm/A	1.76	3.12	4.49	7.22	9.17	10.9	13.7	18.1	25.4
13	Speed constant	rpm/V	5440	3060	2130	1320	1040	874	699	526	377
14	Speed / torque gradient	rpm/mNm	925	1140	1050	1080	1060	1110	1110	1160	1180
15	Mechanical time constant	ms	24.9	25.1	24.4	24.5	24.4	24.6	24.7	25.4	25
16	Rotor inertia	gcm²	2.57	2.1	2.21	2.17	2.2	2.12	2.12	2.09	2.02

Specifications

	Thermal data	
17	Thermal resistance housing-ambient	21.3 K/W
18	Thermal resistance winding-housing	10.5 K/W
19	Thermal time constant winding	13.7 s
20	Thermal time constant motor	201 s
21	Ambient temperature	-30…+85°C
22	Max. permissible winding temperature	+125°C
	Mechanical data (sleeve bearings)	
23	Max. permissible speed	12000 rpm
24	Axial play	0.05 - 0.15 mm
25	Radial play	0.012 mm
26	Max. axial load (dynamic)	1 N
27	Max. force for press fits (static)	80 N
28	Max. radial loading, 5 mm from flange	2.7 N
	Mechanical data (ball bearings)	
23	Max. permissible speed	12000 rpm
24	Axial play	0.05 - 0.15 mm
25	Radial play	0.025 mm
26	Max. axial load (dynamic)	3.3 N
27	Max. force for press fits (static)	45 N
28	Max. radial loading, 5 mm from flange	11.9 N
	Other specifications	
29	Number of pole pairs	1
30	Number of commutator segments	9
31	Weight of motor	33 g

Values listed in the table are nominal.
Explanation of the figures on page 79.

Option
Ball bearings in place of sleeve bearings

Operating Range

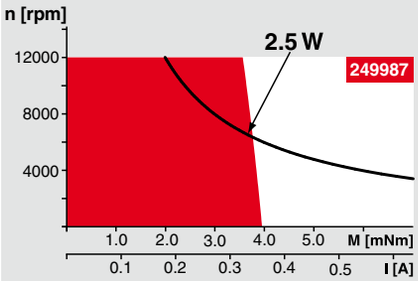

Comments

Continuous operation
In observation of above listed thermal resistance (lines 17 and 18) the maximum permissible winding temperature will be reached during continuous operation at 25°C ambient.
= Thermal limit.

Short term operation
The motor may be briefly overloaded (recurring).

Assigned power rating

maxon Modular System

Overview on page 20–25

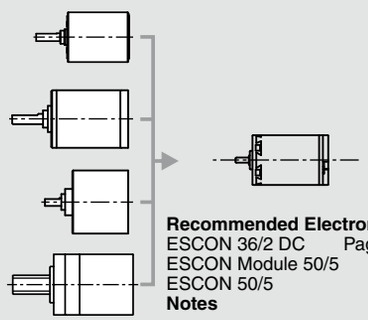

Planetary Gearhead
∅19 mm
0.1 - 0.3 Nm
Page 257

Planetary Gearhead
∅22 mm
0.1 - 2.0 Nm
Page 262/264

Spur Gearhead
∅24 mm
0.1 Nm
Page 269

Spindle Drive
∅22 mm
Page 299/300

Recommended Electronics:

ESCON 36/2 DC	Page 342
ESCON Module 50/5	343
ESCON 50/5	344
Notes	**22**

A-max 19 ∅19 mm, Graphite Brushes, 2.5 Watt

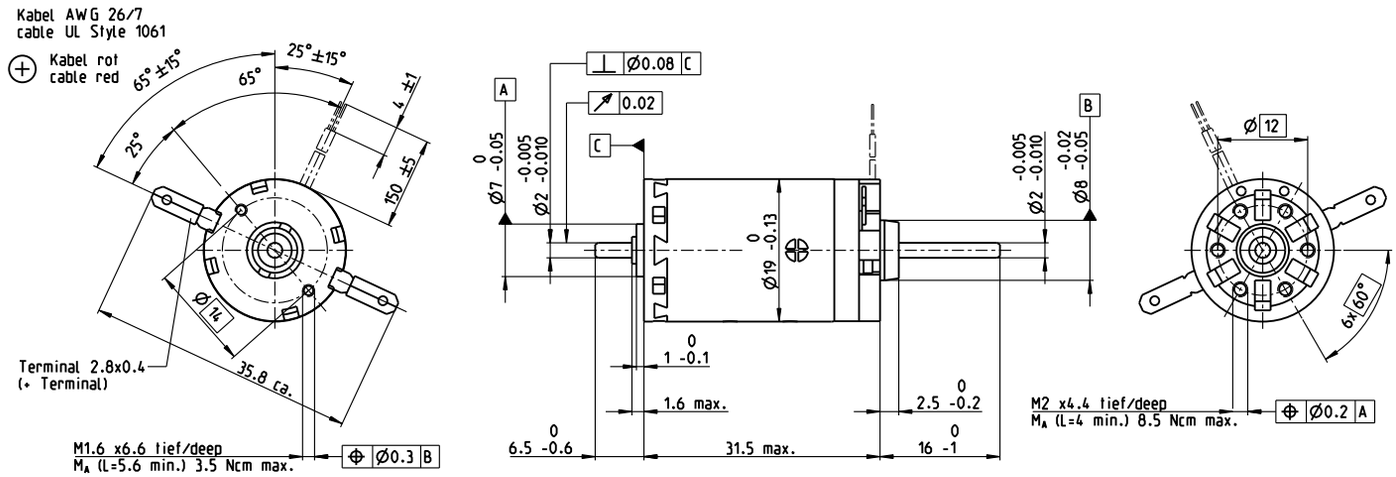

M 1:1

Stock program
Standard program
Special program (on request)

Part Numbers

with terminals	249991	249992	249993	249994	249995	249996	249997	249998	249999
with cables	240035	352971	353590	352972	352973	344596	352974	352975	352976

Motor Data

	Values at nominal voltage									
1	Nominal voltage	V	2.4	3.6	6	7.2	9	12	15	18	24
2	No load speed	rpm	12400	10400	12200	8980	8850	9930	9930	8910	8470
3	No load current	mA	292	158	114	66.1	51.9	44.6	35.7	26.3	18.6
4	Nominal speed	rpm	11700	8350	9310	4750	4630	5670	5670	4520	4020
5	Nominal torque (max. continuous torque)	mNm	0.759	1.78	2.75	3.98	4.02	3.89	3.89	3.83	3.8
6	Nominal current (max. continuous current)	A	0.72	0.72	0.72	0.612	0.485	0.397	0.317	0.235	0.167
7	Stall torque	mNm	14.1	9.66	12.1	8.84	8.83	9.47	9.44	8.16	7.63
8	Starting current	A	8.04	3.09	2.71	1.23	0.963	0.867	0.691	0.45	0.301
9	Max. efficiency	%	64	59	63	59	59	60	60	58	57
	Characteristics									
10	Terminal resistance	Ω	0.299	1.16	2.22	5.88	9.35	13.8	21.7	40	79.8
11	Terminal inductance	mH	0.0186	0.0587	0.121	0.314	0.506	0.719	1.12	1.98	3.87
12	Torque constant	mNm/A	1.76	3.12	4.49	7.22	9.17	10.9	13.7	18.1	25.4
13	Speed constant	rpm/V	5440	3060	2130	1320	1040	874	699	526	377
14	Speed / torque gradient	rpm/mNm	925	1140	1050	1080	1060	1110	1110	1160	1180
15	Mechanical time constant	ms	24.6	24.8	24	24.2	24.1	24.2	24.3	25	24.6
16	Rotor inertia	gcm²	2.54	2.07	2.18	2.14	2.16	2.09	2.09	2.06	1.99

Specifications

	Thermal data	
17	Thermal resistance housing-ambient	21.3 K/W
18	Thermal resistance winding-housing	10.5 K/W
19	Thermal time constant winding	13.7 s
20	Thermal time constant motor	201 s
21	Ambient temperature	-30…+85°C
22	Max. permissible winding temperature	+125°C
	Mechanical data (sleeve bearings)	
23	Max. permissible speed	12000 rpm
24	Axial play	0.05 - 0.15 mm
25	Radial play	0.012 mm
26	Max. axial load (dynamic)	1 N
27	Max. force for press fits (static)	80 N
	(static, shaft supported)	240 N
28	Max. radial loading, 5 mm from flange	2.7 N
	Mechanical data (ball bearings)	
23	Max. permissible speed	12000 rpm
24	Axial play	0.05 - 0.15 mm
25	Radial play	0.025 mm
26	Max. axial load (dynamic)	3.3 N
27	Max. force for press fits (static)	45 N
	(static, shaft supported)	240 N
28	Max. radial loading, 5 mm from flange	11.9 N
	Other specifications	
29	Number of pole pairs	1
30	Number of commutator segments	9
31	Weight of motor	34 g

Values listed in the table are nominal.
Explanation of the figures on page 79.

Option
Ball bearings in place of sleeve bearings

Operating Range

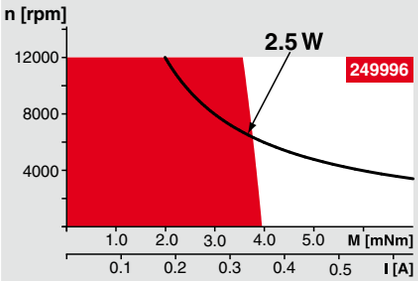

Comments

Continuous operation
In observation of above listed thermal resistance (lines 17 and 18) the maximum permissible winding temperature will be reached during continuous operation at 25°C ambient.
= Thermal limit.

Short term operation
The motor may be briefly overloaded (recurring).

Assigned power rating

maxon Modular System

Overview on page 20–25

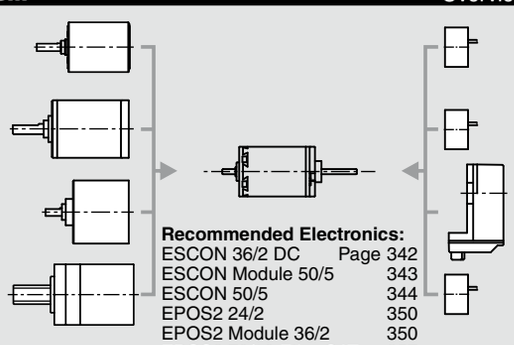

Planetary Gearhead
∅19 mm
0.1 - 0.3 Nm
Page 257

Planetary Gearhead
∅22 mm
0.1 - 2.0 Nm
Page 262/264

Spur Gearhead
∅24 mm
0.1 Nm
Page 269

Spindle Drive
∅22 mm
Page 299/300

Recommended Electronics:

ESCON 36/2 DC	Page 342
ESCON Module 50/5	343
ESCON 50/5	344
EPOS2 24/2	350
EPOS2 Module 36/2	350
EPOS3 70/10 EtherCAT	357
MAXPOS 50/5	360
Notes	**22**

Encoder MR
32 CPT,
2 / 3 channels
Page 315

Encoder MR
128 / 256 / 512 CPT,
2 / 3 channels
Page 317

Encoder Enc
22 mm
100 CPT, 2 channels
Page 324

Encoder MEnc
∅13 mm
16 CPT, 2 channels
Page 334

A-max 22 ∅22 mm, Precious Metal Brushes CLL, 5 Watt

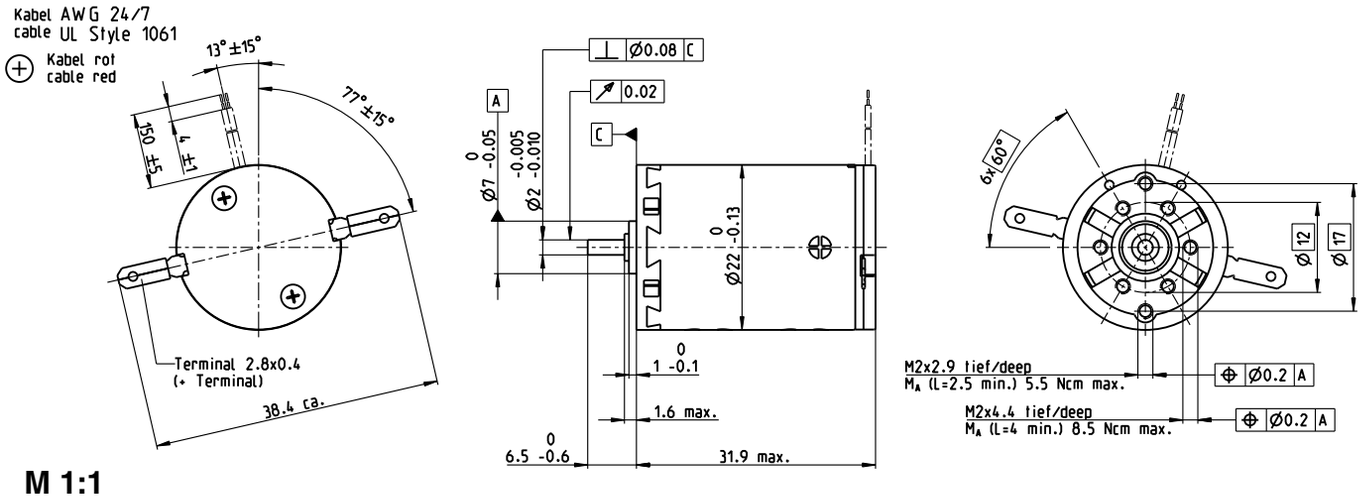

M 1:1

Stock program
Standard program
Special program (on request)

Part Numbers

with terminals		110117	110119	110120	**110121**	110122	110123	110124	**110125**	110126	110127	**110128**	110129
with cables		139838	218799	238798	202413	258367	137255	134267	134666	267423	137476	310003	342390
Motor Data													
Values at nominal voltage													
1 Nominal voltage	V	6	9	9	12	12	15	18	24	30	36	48	48
2 No load speed	rpm	9630	9970	8760	10400	9400	10300	9970	10700	10800	9800	9280	8370
3 No load current	mA	29.5	20.8	16.8	16.8	14.2	13.1	10.4	8.81	7.18	5.06	3.47	2.93
4 Nominal speed	rpm	7390	7300	6100	7770	6700	7530	7220	7970	8070	7000	6420	5520
5 Nominal torque (max. continuous torque)	mNm	4.81	6.22	6.3	6.24	6.18	6.1	6.05	6.02	5.98	5.94	5.83	5.9
6 Nominal current (max. continuous current)	A	0.84	0.745	0.661	0.586	0.523	0.451	0.362	0.291	0.234	0.175	0.122	0.111
7 Stall torque	mNm	20.1	22.9	20.5	24.3	21.4	22.9	22	23.5	23.5	20.8	19	17.4
8 Starting current	A	3.42	2.68	2.11	2.23	1.77	1.65	1.28	1.11	0.894	0.599	0.387	0.32
9 Max. efficiency	%	83	84	83	84	83	83	83	83	83	83	82	82
Characteristics													
10 Terminal resistance	Ω	1.76	3.36	4.27	5.39	6.78	9.07	14	21.6	33.5	60.1	124	150
11 Terminal inductance	mH	0.106	0.222	0.288	0.362	0.445	0.584	0.89	1.37	2.1	3.68	7.29	8.95
12 Torque constant	mNm/A	5.9	8.55	9.73	10.9	12.1	13.9	17.1	21.2	26.2	34.8	48.9	54.3
13 Speed constant	rpm/V	1620	1120	981	875	790	689	558	450	364	274	195	176
14 Speed / torque gradient	rpm/mNm	482	438	430	432	443	451	458	459	465	474	494	486
15 Mechanical time constant	ms	20.5	19.8	19.7	19.7	19.8	20.2	20.1	20.2	20.3	20.3	20.5	20.4
16 Rotor inertia	gcm^2	4.07	4.32	4.37	4.36	4.26	4.27	4.2	4.2	4.16	4.09	3.97	4.01

Specifications

Thermal data	
17 Thermal resistance housing-ambient	20 K/W
18 Thermal resistance winding-housing	6.0 K/W
19 Thermal time constant winding	10.2 s
20 Thermal time constant motor	313 s
21 Ambient temperatureC	-30…+65°C
22 Max. permissible winding temperature	+85°C
Mechanical data (sleeve bearings)	
23 Max. permissible speed	16000 rpm
24 Axial play	0.05 - 0.15 mm
25 Radial play	0.012 mm
26 Max. axial load (dynamic)	1 N
27 Max. force for press fits (static)	80 N
28 Max. radial loading, 5 mm from flange	2.8 N
Mechanical data (ball bearings)	
23 Max. permissible speed	16000 rpm
24 Axial play	0.05 - 0.15 mm
25 Radial play	0.025 mm
26 Max. axial load (dynamic)	3.3 N
27 Max. force for press fits (static)	45 N
28 Max. radial loading, 5 mm from flange	12.3 N
Other specifications	
29 Number of pole pairs	1
30 Number of commutator segments	9
31 Weight of motor	54 g

CLL = Capacitor Long Life

Values listed in the table are nominal.
Explanation of the figures on page 79.

Option
Ball bearings in place of sleeve bearings
Without CLL

Operating Range

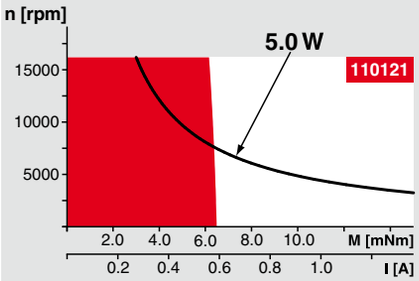

Comments

Continuous operation
In observation of above listed thermal resistance (lines 17 and 18) the maximum permissible winding temperature will be reached during continuous operation at 25°C ambient.
= Thermal limit.

Short term operation
The motor may be briefly overloaded (recurring).

Assigned power rating

maxon Modular System

Overview on page 20–25

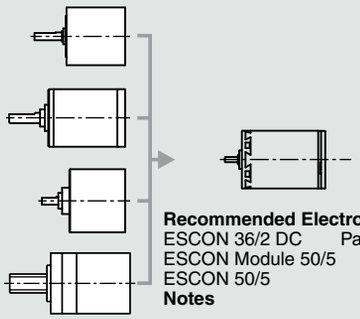

Planetary Gearhead
∅22 mm
0.1 - 0.6 Nm
Page 260/261

Planetary Gearhead
∅22 mm
0.5 - 2.0 Nm
Page 262/264

Spur Gearhead
∅24 mm
0.1 Nm
Page 269

Spindle Drive
∅22 mm
Page 299/300

Recommended Electronics:

ESCON 36/2 DC	Page 342
ESCON Module 50/5	343
ESCON 50/5	344
Notes	**22**

A-max 22 ∅22 mm, Precious Metal Brushes CLL, 3.5 Watt

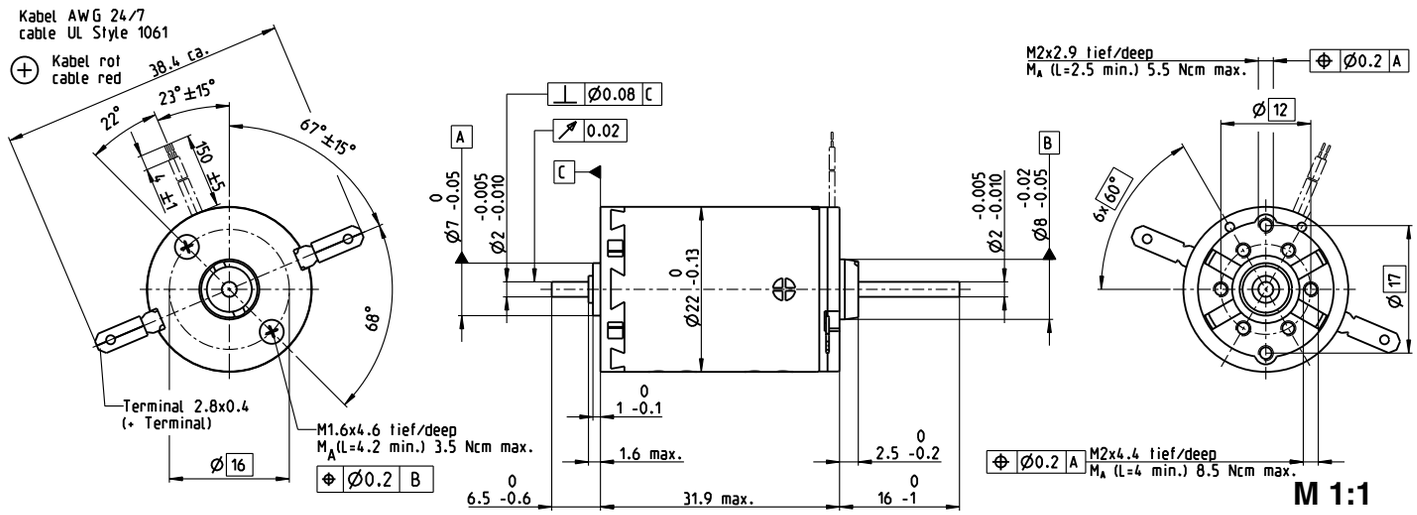

Stock program
Standard program
Special program (on request)

Part Numbers

with terminals		110130	110132	110133	110134	110135	110136	110137	110138	110139	110140	110141	110142
with cables		139846	352986	352987	352988	352989	352990	352991	352992	352993	352994	352995	352996
Motor Data													
Values at nominal voltage													
1 Nominal voltage	V	4.5	6	7.2	7.2	7.2	9	12	15	18	24	36	42
2 No load speed	rpm	7210	6630	7000	6240	5620	6140	6630	6680	6480	6520	6950	7320
3 No load current	mA	26.7	17.8	16	13.6	11.8	10.6	8.88	7.17	5.73	4.33	3.16	2.92
4 Nominal speed	rpm	4970	4380	4770	3990	3340	3830	4320	4360	4140	4160	4540	4940
5 Nominal torque (max. continuous torque)	mNm	4.82	5.24	5.27	5.27	5.22	5.15	5.1	5.09	5.05	5	4.89	4.92
6 Nominal current (max. continuous current)	A	0.84	0.628	0.555	0.495	0.442	0.381	0.306	0.246	0.197	0.147	0.103	0.0932
7 Stall torque	mNm	15.1	15.3	16.4	14.6	12.8	13.7	14.6	14.7	14.1	13.9	14.2	15.2
8 Starting current	A	2.56	1.79	1.69	1.34	1.06	0.992	0.856	0.693	0.537	0.399	0.29	0.28
9 Max. efficiency	%	81	81	82	81	80	81	81	81	81	81	81	81
Characteristics													
10 Terminal resistance	Ω	1.76	3.36	4.27	5.39	6.78	9.07	14	21.6	33.5	60.1	124	150
11 Terminal inductance	mH	0.106	0.222	0.288	0.362	0.445	0.584	0.89	1.37	2.1	3.68	7.29	8.95
12 Torque constant	mNm/A	5.9	8.55	9.73	10.9	12.1	13.9	17.1	21.2	26.2	34.8	48.9	54.3
13 Speed constant	rpm/V	1620	1120	981	875	790	689	558	450	364	274	195	176
14 Speed / torque gradient	rpm/mNm	482	438	430	432	443	451	458	459	465	474	494	486
15 Mechanical time constant	ms	20.6	19.8	19.7	19.7	19.8	20.2	20.1	20.2	20.3	20.3	20.6	20.4
16 Rotor inertia	gcm²	4.07	4.32	4.38	4.36	4.26	4.27	4.2	4.21	4.16	4.1	3.97	4.01

Specifications

Thermal data	
17 Thermal resistance housing-ambient	20 K/W
18 Thermal resistance winding-housing	6.0 K/W
19 Thermal time constant winding	10.2 s
20 Thermal time constant motor	313 s
21 Ambient temperature	-30…+65°C
22 Max. permissible winding temperature	+85°C
Mechanical data (sleeve bearings)	
23 Max. permissible speed	10000 rpm
24 Axial play	0.05 - 0.15 mm
25 Radial play	0.012 mm
26 Max. axial load (dynamic)	1 N
27 Max. force for press fits (static)	80 N
(static, shaft supported)	440 N
28 Max. radial loading, 5 mm from flange	2.8 N
Mechanical data (ball bearings)	
23 Max. permissible speed	10000 rpm
24 Axial play	0.05 - 0.15 mm
25 Radial play	0.025 mm
26 Max. axial load (dynamic)	3.3 N
27 Max. force for press fits (static)	45 N
(static, shaft supported)	440 N
28 Max. radial loading, 5 mm from flange	12.3 N
Other specifications	
29 Number of pole pairs	1
30 Number of commutator segments	9
31 Weight of motor	54 g

CLL = Capacitor Long Life

Values listed in the table are nominal.
Explanation of the figures on page 79.

Option
Ball bearings in place of sleeve bearings
Without CLL

Operating Range

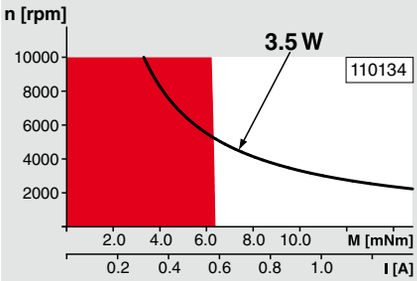

Comments

Continuous operation
In observation of above listed thermal resistance (lines 17 and 18) the maximum permissible winding temperature will be reached during continuous operation at 25°C ambient.
= Thermal limit.

Short term operation
The motor may be briefly overloaded (recurring).

Assigned power rating

maxon Modular System

Overview on page 20–25

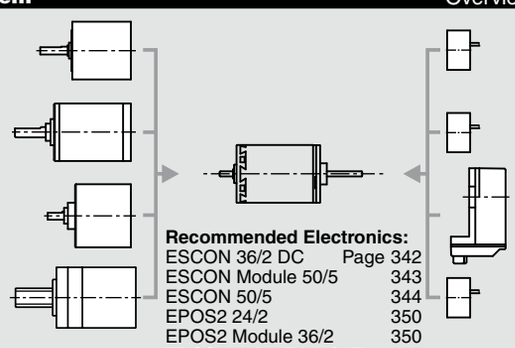

Planetary Gearhead
∅22 mm
0.1 - 0.6 Nm
Page 260/261

Planetary Gearhead
∅22 mm
0.5 - 2.0 Nm
Page 262/264

Spur Gearhead
∅24 mm
0.1 Nm
Page 269

Spindle Drive
∅22 mm
Page 299/300

Recommended Electronics:

ESCON 36/2 DC	Page 342
ESCON Module 50/5	343
ESCON 50/5	344
EPOS2 24/2	350
EPOS2 Module 36/2	350
EPOS3 70/10 EtherCAT	357
MAXPOS 50/5	360
Notes	**22**

Encoder MR
32 CPT,
2 / 3 channels
Page 315

Encoder MR
128 / 256 / 512 CPT,
2 / 3 channels
Page 317

Encoder Enc
22 mm
100 CPT, 2 channels
Page 324

Encoder MEnc
∅13 mm
16 CPT, 2 channels
Page 335

A-max 22 ∅22 mm, Graphite Brushes, 6 Watt

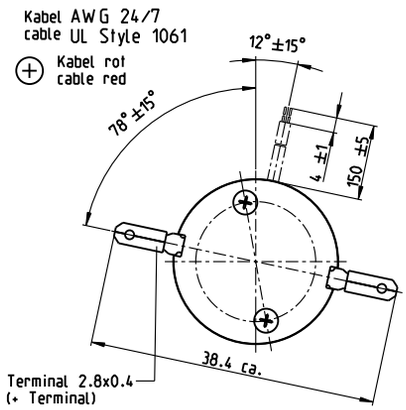

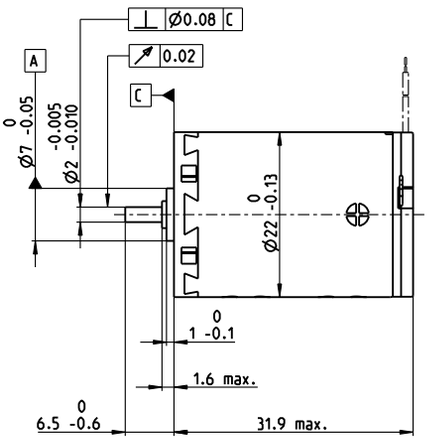

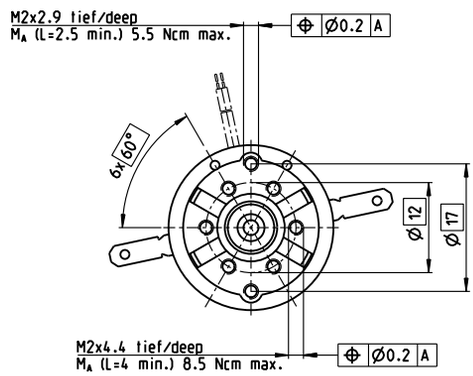

M 1:1

Stock program
Standard program
Special program (on request)

Part Numbers

with terminals		110143	110145	110146	110147	110148	110149	110150	110151	110152	110153	110154	110155
with cables		139840	353017	199807	320206	323856	108828	199424	202921	267433	325492	313302	353019
Motor Data													
Values at nominal voltage													
1 Nominal voltage	V	6	9	9	12	12	15	18	24	24	36	48	48
2 No load speed	rpm	9240	9690	8500	10200	9170	10000	9770	10500	8480	9630	9110	8210
3 No load current	mA	83.1	57.9	49.6	45.8	40.5	36	29	23.7	18.4	14.2	9.99	8.84
4 Nominal speed	rpm	6240	6530	5350	7060	6000	6890	6600	7380	5270	6420	5840	4940
5 Nominal torque (max. continuous torque)	mNm	5.91	6.88	7.04	6.96	6.95	6.93	6.92	6.9	6.97	6.86	6.75	6.86
6 Nominal current (max. continuous current)	A	1.08	0.859	0.77	0.681	0.613	0.534	0.432	0.347	0.283	0.21	0.147	0.135
7 Stall torque	mNm	19.4	22.1	19.8	23.7	20.9	22.9	22	23.7	18.9	21.1	19.2	17.6
8 Starting current	A	3.29	2.59	2.04	2.17	1.72	1.65	1.29	1.12	0.721	0.606	0.393	0.325
9 Max. efficiency	%	67	70	69	72	70	72	72	73	70	72	71	70
Characteristics													
10 Terminal resistance	Ω	1.82	3.48	4.42	5.53	6.96	9.09	14	21.5	33.3	59.4	122	148
11 Terminal inductance	mH	0.106	0.223	0.288	0.363	0.445	0.585	0.891	1.37	2.1	3.69	7.3	8.97
12 Torque constant	mNm/A	5.9	8.55	9.73	10.9	12.1	13.9	17.1	21.2	26.2	34.8	48.9	54.3
13 Speed constant	rpm/V	1620	1120	981	875	790	689	558	450	364	274	195	176
14 Speed / torque gradient	rpm/mNm	500	454	446	444	455	452	457	456	461	468	487	479
15 Mechanical time constant	ms	20.9	20.2	20.1	19.9	19.9	19.9	19.7	19.7	19.8	19.7	19.9	19.8
16 Rotor inertia	gcm^2	4	4.25	4.3	4.29	4.19	4.2	4.13	4.13	4.09	4.02	3.9	3.94

Specifications

Thermal data	
17 Thermal resistance housing-ambient	20 K/W
18 Thermal resistance winding-housing	6.0 K/W
19 Thermal time constant winding	9.43 s
20 Thermal time constant motor	314 s
21 Ambient temperature	-30…+85°C
22 Max. permissible winding temperature	+125°C
Mechanical data (sleeve bearings)	
23 Max. permissible speed	9800 rpm
24 Axial play	0.05 - 0.15 mm
25 Radial play	0.012 mm
26 Max. axial load (dynamic)	1 N
27 Max. force for press fits (static)	80 N
28 Max. radial loading, 5 mm from flange	2.8 N
Mechanical data (ball bearings)	
23 Max. permissible speed	9800 rpm
24 Axial play	0.05 - 0.15 mm
25 Radial play	0.025 mm
26 Max. axial load (dynamic)	3.3 N
27 Max. force for press fits (static)	45 N
28 Max. radial loading, 5 mm from flange	12.3 N
Other specifications	
29 Number of pole pairs	1
30 Number of commutator segments	9
31 Weight of motor	54 g

Values listed in the table are nominal.
Explanation of the figures on page 79.

Option
Ball bearings in place of sleeve bearings

Operating Range

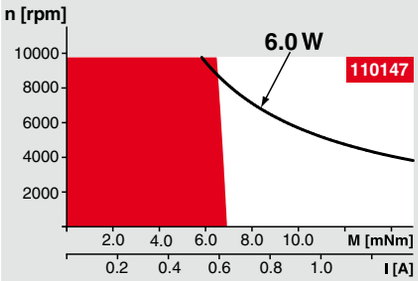

Comments

Continuous operation
In observation of above listed thermal resistance (lines 17 and 18) the maximum permissible winding temperature will be reached during continuous operation at 25°C ambient.
= Thermal limit.

Short term operation
The motor may be briefly overloaded (recurring).

Assigned power rating

maxon Modular System

Overview on page 20–25

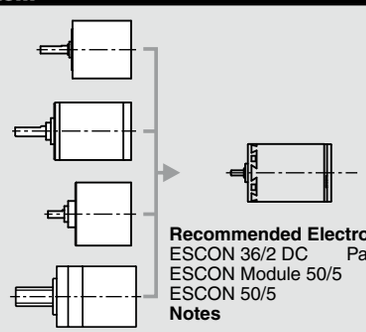

Planetary Gearhead
∅22 mm
0.1 - 0.6 Nm
Page 260/261

Planetary Gearhead
∅22 mm
0.5 - 2.0 Nm
Page 262/264

Spur Gearhead
∅24 mm
0.1 Nm
Page 269

Spindle Drive
∅22 mm
Page 299/300

Recommended Electronics:

ESCON 36/2 DC	Page 342
ESCON Module 50/5	343
ESCON 50/5	344
Notes	**22**

A-max 22 ∅22 mm, Graphite Brushes, 6 Watt

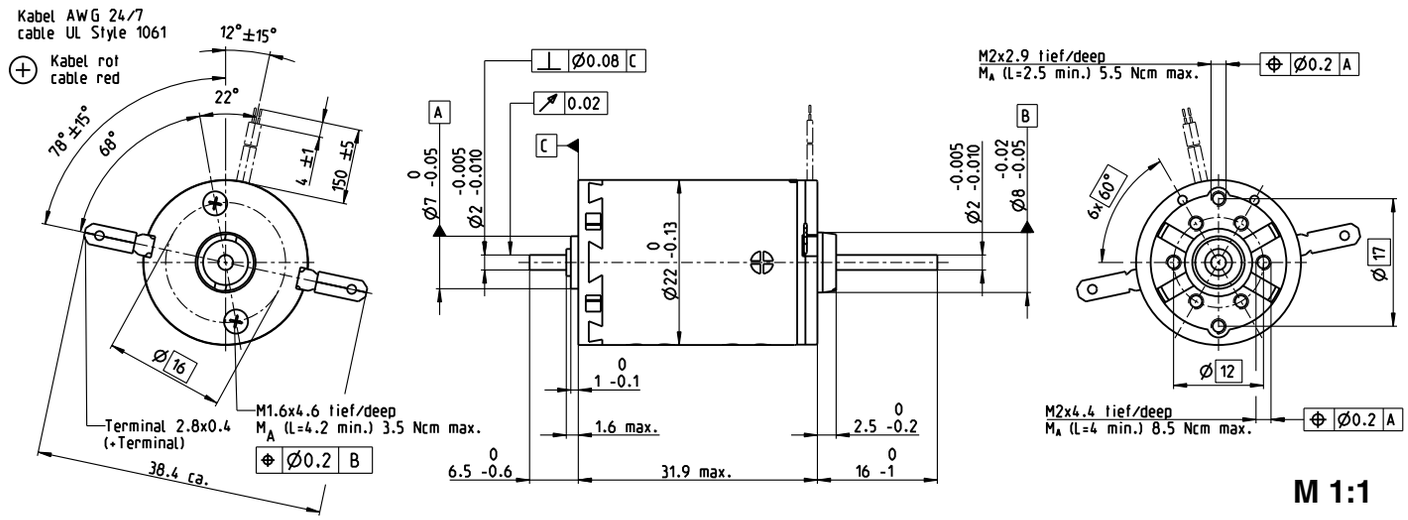

Stock program
Standard program
Special program (on request)

Part Numbers

with terminals	110156	110158	110159	**110160**	110161	110162	110163	**110164**	110165	110166	110167	110168	
with cables	139848	353023	353024	231171	353025	353026	231174	353027	353028	353029	316659	353603	

Motor Data

	Values at nominal voltage													
1	Nominal voltage	V	6	9	9	12	12	15	18	24	24	36	48	48
2	No load speed	rpm	9240	9690	8500	10200	9170	10000	9770	10500	8480	9630	9110	8210
3	No load current	mA	83.1	57.9	49.6	45.8	40.5	36	29	23.7	18.4	14.2	9.99	8.84
4	Nominal speed	rpm	6240	6530	5350	7060	6000	6890	6600	7380	5270	6420	5840	4940
5	Nominal torque (max. continuous torque)	mNm	5.91	6.88	7.04	6.96	6.95	6.93	6.92	6.9	6.97	6.86	6.75	6.86
6	Nominal current (max. continuous current)	A	1.08	0.859	0.77	0.681	0.613	0.534	0.432	0.347	0.283	0.21	0.147	0.135
7	Stall torque	mNm	19.4	22.1	19.8	23.7	20.9	22.9	22	23.7	18.9	21.1	19.2	17.6
8	Starting current	A	3.29	2.59	2.04	2.17	1.72	1.65	1.29	1.12	0.721	0.606	0.393	0.325
9	Max. efficiency	%	67	70	69	72	70	72	72	73	70	72	71	70
	Characteristics													
10	Terminal resistance	Ω	1.82	3.48	4.42	5.53	6.96	9.09	14	21.5	33.3	59.4	122	148
11	Terminal inductance	mH	0.106	0.223	0.288	0.363	0.445	0.585	0.891	1.37	2.1	3.69	7.3	8.97
12	Torque constant	mNm/A	5.9	8.55	9.73	10.9	12.1	13.9	17.1	21.2	26.2	34.8	48.9	54.3
13	Speed constant	rpm/V	1620	1120	981	875	790	689	558	450	364	274	195	176
14	Speed / torque gradient	rpm/mNm	500	454	446	444	455	452	457	456	461	468	487	479
15	Mechanical time constant	ms	21.3	20.5	20.4	20.2	20.3	20.2	20.1	20.1	20.1	20.1	20.2	20.1
16	Rotor inertia	gcm²	4.07	4.32	4.37	4.36	4.26	4.27	4.2	4.2	4.16	4.09	3.97	4.01

Specifications

	Thermal data	
17	Thermal resistance housing-ambient	20 K/W
18	Thermal resistance winding-housing	6.0 K/W
19	Thermal time constant winding	9.43 s
20	Thermal time constant motor	313 s
21	Ambient temperature	-30…+85°C
22	Max. permissible winding temperature	+125°C
	Mechanical data (sleeve bearings)	
23	Max. permissible speed	9800 rpm
24	Axial play	0.05 - 0.15 mm
25	Radial play	0.012 mm
26	Max. axial load (dynamic)	1 N
27	Max. force for press fits (static)	80 N
	(static, shaft supported)	240 N
28	Max. radial loading, 5 mm from flange	2.8 N
	Mechanical data (ball bearings)	
23	Max. permissible speed	9800 rpm
24	Axial play	0.05 - 0.15 mm
25	Radial play	0.025 mm
26	Max. axial load (dynamic)	3.3 N
27	Max. force for press fits (static)	45 N
	(static, shaft supported)	240 N
28	Max. radial loading, 5 mm from flange	12.3 N
	Other specifications	
29	Number of pole pairs	1
30	Number of commutator segments	9
31	Weight of motor	54 g

Values listed in the table are nominal.
Explanation of the figures on page 79.

Option
Ball bearings in place of sleeve bearings

Operating Range

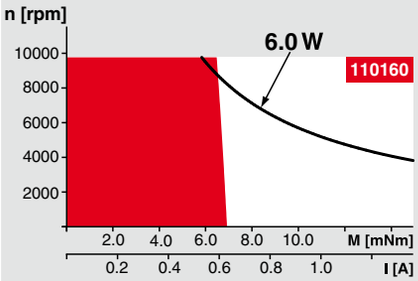

Comments

Continuous operation
In observation of above listed thermal resistance (lines 17 and 18) the maximum permissible winding temperature will be reached during continuous operation at 25°C ambient.
= Thermal limit.

Short term operation
The motor may be briefly overloaded (recurring).

Assigned power rating

maxon Modular System

Overview on page 20–25

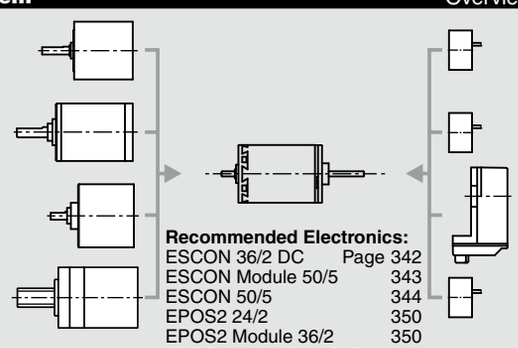

Planetary Gearhead
∅22 mm
0.1 - 0.6 Nm
Page 260/261

Planetary Gearhead
∅22 mm
0.5 - 2.0 Nm
Page 262/264

Spur Gearhead
∅24 mm
0.1 Nm
Page 269

Spindle Drive
∅22 mm
Page 299/300

Recommended Electronics:

ESCON 36/2 DC	Page 342
ESCON Module 50/5	343
ESCON 50/5	344
EPOS2 24/2	350
EPOS2 Module 36/2	350
EPOS3 70/10 EtherCAT	357
MAXPOS 50/5	360
Notes	**22**

Encoder MR
32 CPT,
2 / 3 channels
Page 315

Encoder MR
128 / 256 / 512 CPT,
2 / 3 channels
Page 317

Encoder Enc
22 mm
100 CPT, 2 channels
Page 324

Encoder MEnc
∅13 mm
16 CPT, 2 channels
Page 335

A-max 26 ∅26 mm, Precious Metal Brushes CLL, 4 Watt

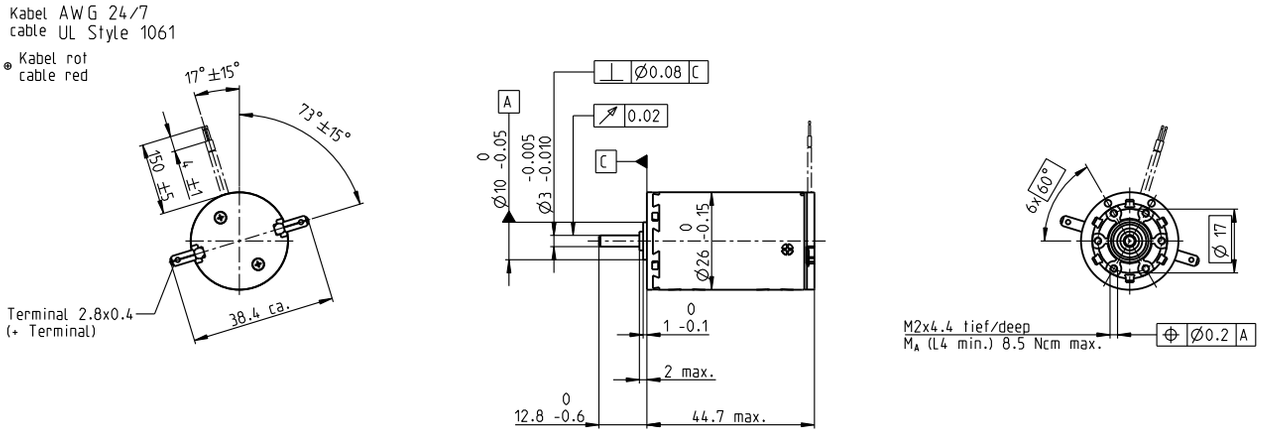

M 1:2

Stock program
Standard program
Special program (on request)

Part Numbers

with terminals		110169	110170	110171	110172	110173	110174	110175	110176	110177	110178	110179	110180
with cables		353039	353040	353041	353042	220031	353043	353044	353045	353046	353047	353048	353049
Motor Data													
Values at nominal voltage													
1 Nominal voltage	V	4.5	4.5	4.5	7.2	12	12	15	18	18	24	30	42
2 No load speed	rpm	6120	5230	3860	5110	5590	5020	5430	5980	5340	5670	5890	5520
3 No load current	mA	60	47.4	30.4	28.5	19.6	16.7	15	14.5	12.2	10	8.5	5.51
4 Nominal speed	rpm	5140	3910	2400	3290	3470	2880	3190	3690	3160	3500	3680	3270
5 Nominal torque (max. continuous torque)	mNm	5.45	6.46	8.95	10.9	12.4	12.4	11.8	11.4	12.1	12.1	11.9	11.7
6 Nominal current (max. continuous current)	A	0.84	0.84	0.84	0.84	0.631	0.565	0.464	0.414	0.392	0.312	0.255	0.168
7 Stall torque	mNm	32.6	24.9	23.3	30.2	32.8	29.3	28.6	29.9	29.9	31.8	31.9	28.9
8 Starting current	A	4.7	3.08	2.12	2.27	1.62	1.3	1.1	1.05	0.94	0.797	0.665	0.403
9 Max. efficiency	%	79	77	78	79	80	79	78	78	79	79	79	79
Characteristics													
10 Terminal resistance	Ω	0.958	1.46	2.12	3.17	7.41	9.24	13.7	17.1	19.2	30.1	45.1	104
11 Terminal inductance	mH	0.101	0.138	0.254	0.372	0.862	1.07	1.42	1.69	2.13	3.35	4.85	10.8
12 Torque constant	mNm/A	6.94	8.09	11	13.3	20.2	22.5	26	28.3	31.8	39.9	48	71.6
13 Speed constant	rpm/V	1380	1180	869	718	472	423	367	337	300	239	199	133
14 Speed / torque gradient	rpm/mNm	190	213	168	171	173	173	193	203	181	181	187	194
15 Mechanical time constant	ms	24.6	24.4	23.8	23.7	23.6	23.6	23.8	23.9	23.7	23.7	23.8	24
16 Rotor inertia	gcm²	12.3	10.9	13.6	13.2	13.1	13	11.8	11.2	12.5	12.5	12.2	11.8

Specifications

Thermal data	
17 Thermal resistance housing-ambient	13.2 K/W
18 Thermal resistance winding-housing	3.2 K/W
19 Thermal time constant winding	12.5 s
20 Thermal time constant motor	423 s
21 Ambient temperature	-30…+65°C
22 Max. permissible winding temperature	+85°C
Mechanical data (sleeve bearings)	
23 Max. permissible speed	11 000 rpm
24 Axial play	0.1 - 0.2 mm
25 Radial play	0.012 mm
26 Max. axial load (dynamic)	1.7 N
27 Max. force for press fits (static)	80 N
28 Max. radial loading, 5 mm from flange	5.5 N
Mechanical data (ball bearings)	
23 Max. permissible speed	11 000 rpm
24 Axial play	0.1 - 0.2 mm
25 Radial play	0.025 mm
26 Max. axial load (dynamic)	5 N
27 Max. force for press fits (static)	75 N
28 Max. radial loading, 5 mm from flange	20.5 N
Other specifications	
29 Number of pole pairs	1
30 Number of commutator segments	13
31 Weight of motor	100 g

CLL = Capacitor Long Life

Values listed in the table are nominal.
Explanation of the figures on page 79.

Option
Ball bearings in place of sleeve bearings
Without CLL

Operating Range

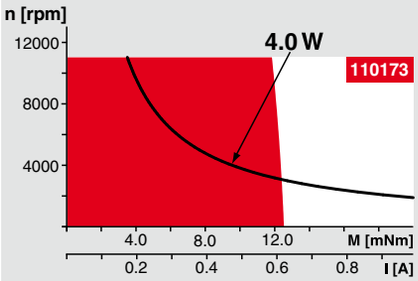

Comments

Continuous operation
In observation of above listed thermal resistance (lines 17 and 18) the maximum permissible winding temperature will be reached during continuous operation at 25°C ambient.
= Thermal limit.

Short term operation
The motor may be briefly overloaded (recurring).

Assigned power rating

maxon Modular System

Overview on page 20–25

Planetary Gearhead
∅26 mm
0.75 - 4.5 Nm
Page 270

Spur Gearhead
∅30 mm
0.07 - 0.2 Nm
Page 271

Planetary Gearhead
∅32 mm
0.75 - 6.0 Nm
Page 272/273/276

Spur Gearhead
∅38 mm
0.1 - 0.6 Nm
Page 282

Spindle Drive
∅32 mm
Page 301–303

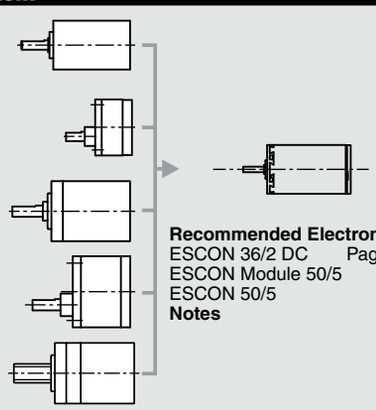

Recommended Electronics:

ESCON 36/2 DC	Page 342
ESCON Module 50/5	343
ESCON 50/5	344
Notes	**22**

A-max 26 ∅26 mm, Precious Metal Brushes CLL, 4 Watt

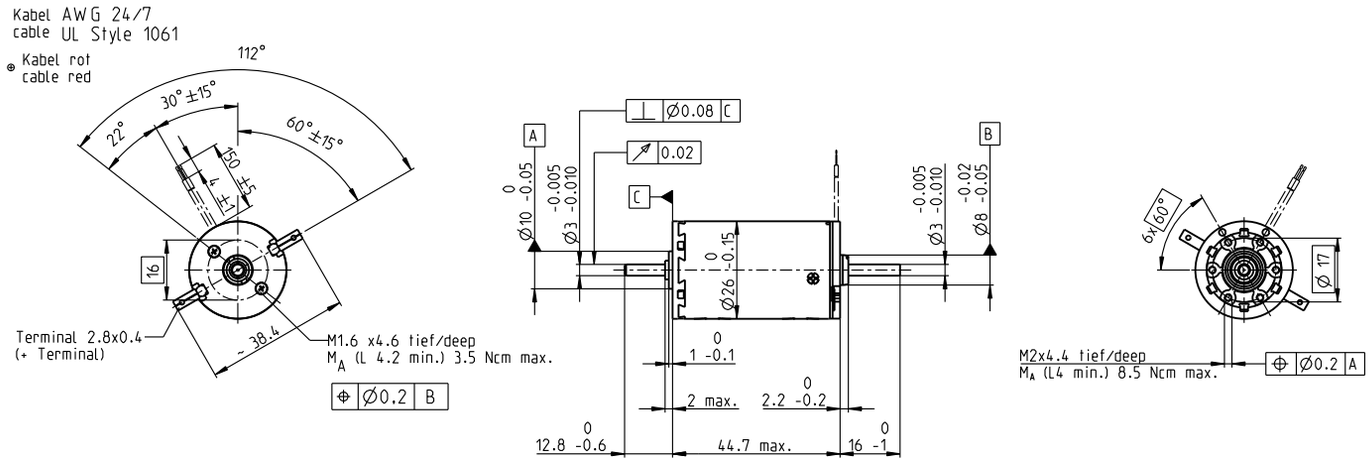

M 1:2

Stock program
Standard program
Special program (on request)

Part Numbers

with terminals		110192	110193	110194	110195	**110196**	110197	110198	110199	110200	**110201**	110202	110203
with cables		353064	353065	353066	353067	205635	353068	353069	353070	353071	353072	353073	353074
Motor Data													
Values at nominal voltage													
1 Nominal voltage	V	3.6	4.5	6	7.2	9	9	12	15	18	21	24	30
2 No load speed	rpm	4870	5210	5140	5090	4180	3740	4320	4970	5320	4950	4690	3920
3 No load current	mA	63.9	56.8	41.5	34.1	20.2	17.2	16	15.8	14.6	11.2	9.04	5.54
4 Nominal speed	rpm	3910	3910	3700	3350	2400	1960	2450	3060	3530	3140	2850	2040
5 Nominal torque (max. continuous torque)	mNm	5.43	6.4	8.84	10.4	10.4	10.4	9.83	9.5	10	10.1	9.94	9.82
6 Nominal current (max. continuous current)	A	0.84	0.84	0.84	0.811	0.531	0.476	0.39	0.348	0.328	0.262	0.214	0.141
7 Stall torque	mNm	26.1	24.9	31.1	30.2	24.6	22	22.8	24.9	29.9	27.8	25.5	20.6
8 Starting current	A	3.76	3.08	2.83	2.27	1.22	0.974	0.878	0.879	0.94	0.697	0.532	0.288
9 Max. efficiency	%	76	75	78	78	76	76	75	76	77	77	76	75
Characteristics													
10 Terminal resistance	Ω	0.958	1.46	2.12	3.17	7.41	9.24	13.7	17.1	19.2	30.1	45.1	104
11 Terminal inductance	mH	0.101	0.138	0.254	0.372	0.862	1.07	1.42	1.69	2.13	3.35	4.85	10.8
12 Torque constant	mNm/A	6.94	8.09	11	13.3	20.2	22.5	26	28.3	31.8	39.9	48	71.6
13 Speed constant	rpm/V	1380	1180	869	718	472	423	367	337	300	239	199	133
14 Speed / torque gradient	rpm/mNm	190	213	168	171	173	173	193	203	181	181	187	194
15 Mechanical time constant	ms	24.6	24.4	23.8	23.7	23.6	23.6	23.8	24	23.8	23.7	23.9	24
16 Rotor inertia	gcm²	12.4	11	13.6	13.2	13.1	13	11.8	11.3	12.6	12.5	12.2	11.8

Specifications

Thermal data	
17 Thermal resistance housing-ambient	13.2 K/W
18 Thermal resistance winding-housing	3.2 K/W
19 Thermal time constant winding	12.5 s
20 Thermal time constant motor	660 s
21 Ambient temperature	-30…+65°C
22 Max. permissible winding temperature	+85°C
Mechanical data (sleeve bearings)	
23 Max. permissible speed	6700 rpm
24 Axial play	0.1 - 0.2 mm
25 Radial play	0.012 mm
26 Max. axial load (dynamic)	1.7 N
27 Max. force for press fits (static)	80 N
(static, shaft supported)	1200 N
28 Max. radial loading, 5 mm from flange	5.5 N
Mechanical data (ball bearings)	
23 Max. permissible speed	6700 rpm
24 Axial play	0.1 - 0.2 mm
25 Radial play	0.025 mm
26 Max. axial load (dynamic)	5.0 N
27 Max. force for press fits (static)	75 N
(static, shaft supported)	1200 N
28 Max. radial loading, 5 mm from flange	20.5 N
Other specifications	
29 Number of pole pairs	1
30 Number of commutator segments	13
31 Weight of motor	100 g

CLL = Capacitor Long Life

Values listed in the table are nominal.
Explanation of the figures on page 79.

Option
Ball bearings in place of sleeve bearings
Without CLL

Operating Range

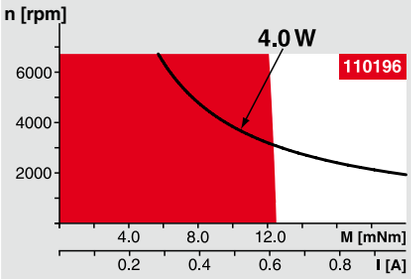

Comments

Continuous operation
In observation of above listed thermal resistance (lines 17 and 18) the maximum permissible winding temperature will be reached during continuous operation at 25°C ambient.
= Thermal limit.

Short term operation
The motor may be briefly overloaded (recurring).

Assigned power rating

maxon Modular System

Overview on page 20–25

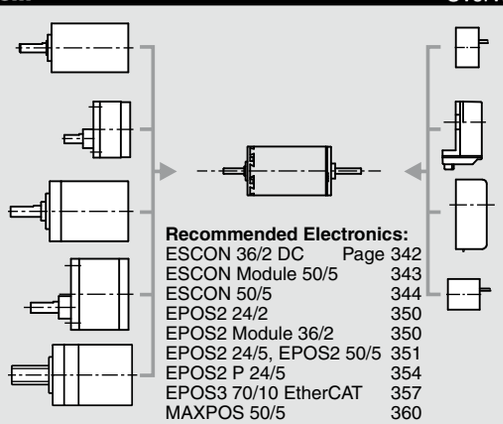

Planetary Gearhead
∅26 mm
0.75 - 4.5 Nm
Page 270

Spur Gearhead
∅30 mm
0.07 - 0.2 Nm
Page 271

Planetary Gearhead
∅32 mm
0.75 - 6.0 Nm
Page 272/273/276

Spur Gearhead
∅38 mm
0.1 - 0.6 Nm
Page 282

Spindle Drive
∅32 mm
Page 301–303

Recommended Electronics:

ESCON 36/2 DC	Page 342
ESCON Module 50/5	343
ESCON 50/5	344
EPOS2 24/2	350
EPOS2 Module 36/2	350
EPOS2 24/5, EPOS2 50/5	351
EPOS2 P 24/5	354
EPOS3 70/10 EtherCAT	357
MAXPOS 50/5	360
Notes	**22**

Encoder MR
128 - 1000 CPT,
3 channels
Page 319

Encoder Enc
22 mm
100 CPT, 2 channels
Page 324

Encoder HED_ 5540
500 CPT,
3 channels
Page 326/327

Encoder MEnc
∅13 mm
16 CPT, 2 channels
Page 335

A-max 26 ∅26 mm, Precious Metal Brushes CLL, 7 Watt

High Power

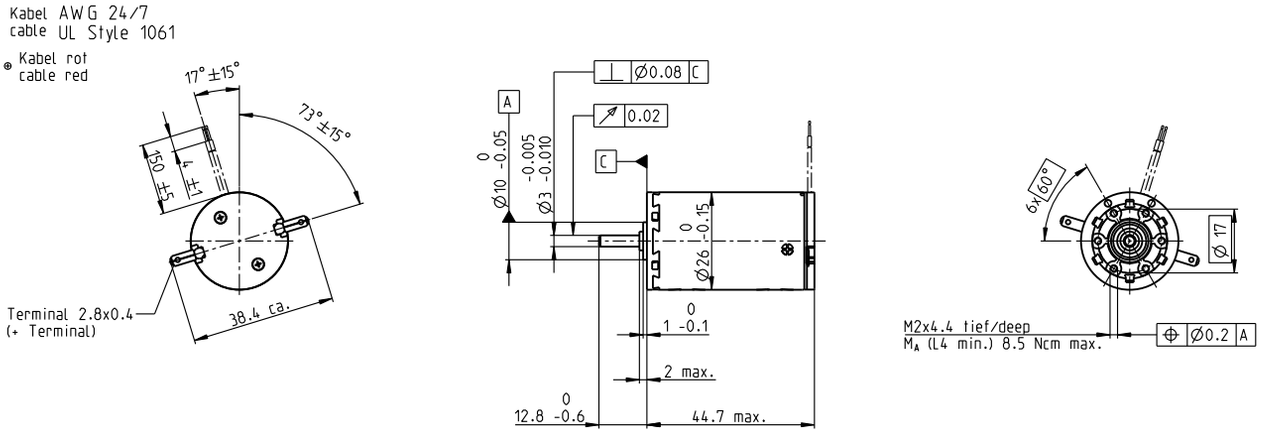

M 1:2

Stock program
Standard program
Special program (on request)

Part Numbers

with terminals	110181	110182	110183	**110184**	110185	110186	**110187**	110188	110189	110190	110191
with cables	353078	353079	353080	353081	329757	353082	332818	353083	353084	353085	353086

Motor Data

	Values at nominal voltage												
1	Nominal voltage	V	4.5	6	9	12	15	18	24	30	36	42	48
2	No load speed	rpm	7320	8670	6160	6780	6720	6690	5670	6090	6780	6570	6050
3	No load current	mA	78.9	77.7	30.2	26.3	20.7	17.1	9.97	8.9	8.76	7.15	5.5
4	Nominal speed	rpm	6900	8130	5000	5340	5060	5010	3940	4370	5060	4820	4280
5	Nominal torque (max. continuous torque)	mNm	4.46	5.02	11.3	13.7	15.8	15.6	15.3	15.3	15.2	15	15
6	Nominal current (max. continuous current)	A	0.84	0.84	0.84	0.84	0.766	0.627	0.391	0.336	0.31	0.254	0.204
7	Stall torque	mNm	67.3	73.5	58.8	63.5	63.6	62.1	50.3	54.2	60.2	56.4	51.4
8	Starting current	A	11.5	11.2	4.25	3.78	3.01	2.43	1.25	1.16	1.2	0.93	0.683
9	Max. efficiency	%	84	84	84	84	84	84	83	84	84	84	83
	Characteristics												
10	Terminal resistance	Ω	0.39	0.536	2.12	3.17	4.99	7.41	19.2	25.8	30.1	45.1	70.2
11	Terminal inductance	mH	0.0402	0.0509	0.227	0.333	0.529	0.77	1.9	2.58	2.99	4.34	6.68
12	Torque constant	mNm/A	5.84	6.57	13.9	16.8	21.2	25.5	40.1	46.7	50.3	60.6	75.2
13	Speed constant	rpm/V	1640	1450	689	569	451	374	238	205	190	158	127
14	Speed / torque gradient	rpm/mNm	109	119	105	108	106	108	114	113	114	117	119
15	Mechanical time constant	ms	16.5	16	15	14.9	14.8	14.8	14.9	14.9	14.9	15	15
16	Rotor inertia	gcm²	14.4	12.9	13.6	13.2	13.3	13.1	12.5	12.6	12.5	12.2	12.1

Specifications

	Thermal data	
17	Thermal resistance housing-ambient	13.2 K/W
18	Thermal resistance winding-housing	3.2 K/W
19	Thermal time constant winding	13.8 s
20	Thermal time constant motor	473 s
21	Ambient temperature	-30…+65°C
22	Max. permissible winding temperature	+85°C
	Mechanical data (sleeve bearings)	
23	Max. permissible speed	11000 rpm
24	Axial play	0.1 - 0.2 mm
25	Radial play	0.012 mm
26	Max. axial load (dynamic)	1.7 N
27	Max. force for press fits (static)	80 N
28	Max. radial loading, 5 mm from flange	5.5 N
	Mechanical data (ball bearings)	
23	Max. permissible speed	11000 rpm
24	Axial play	0.1 - 0.2 mm
25	Radial play	0.025 mm
26	Max. axial load (dynamic)	5 N
27	Max. force for press fits (static)	75 N
28	Max. radial loading, 5 mm from flange	20.5 N
	Other specifications	
29	Number of pole pairs	1
30	Number of commutator segments	13
31	Weight of motor	117 g

CLL = Capacitor Long Life

Values listed in the table are nominal.
Explanation of the figures on page 79.

Option
Ball bearings in place of sleeve bearings
Without CLL

Operating Range

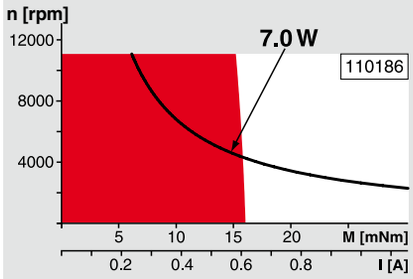

Comments

Continuous operation
In observation of above listed thermal resistance (lines 17 and 18) the maximum permissible winding temperature will be reached during continuous operation at 25°C ambient.
= Thermal limit.

Short term operation
The motor may be briefly overloaded (recurring).

Assigned power rating

maxon Modular System

Overview on page 20–25

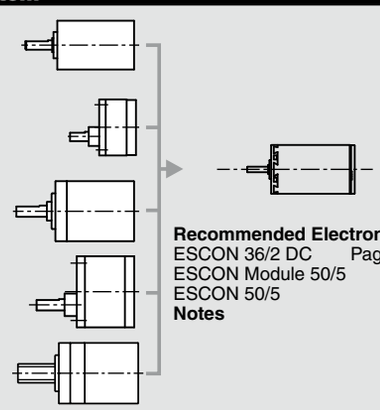

Planetary Gearhead
∅26 mm
0.75 - 4.5 Nm
Page 270

Spur Gearhead
∅30 mm
0.07 - 0.2 Nm
Page 271

Planetary Gearhead
∅32 mm
0.75 - 6.0 Nm
Page 272/273/276

Spur Gearhead
∅38 mm
0.1 - 0.6 Nm
Page 282

Spindle Drive
∅32 mm
Page 301–303

Recommended Electronics:

ESCON 36/2 DC	Page 342
ESCON Module 50/5	343
ESCON 50/5	344
Notes	**22**

A-max 26 ∅26 mm, Precious Metal Brushes CLL, 4.5 Watt

High Power

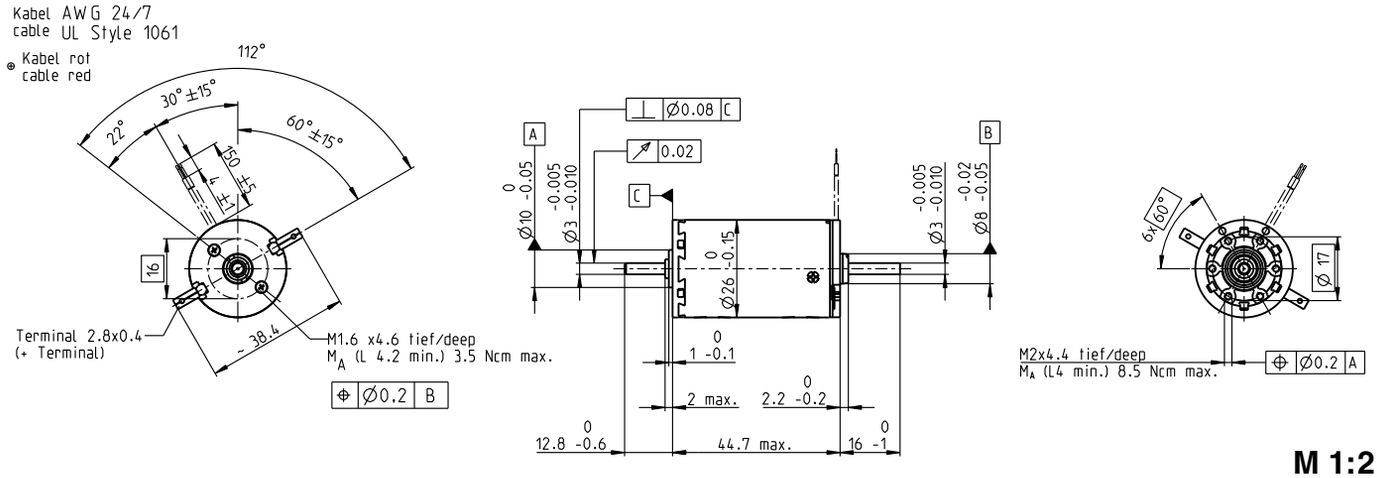

Stock program
Standard program
Special program (on request)

Part Numbers

with terminals	110204	110205	110206	110207	110208	110209	110210	110211	110212	110213	110214
with cables	353109	353110	353111	353112	353113	353114	353115	353116	353117	353118	353119

Motor Data

	Values at nominal voltage												
1	Nominal voltage	V	2.4	3.6	6	7.2	9	12	15	18	24	30	36
2	No load speed	rpm	3890	5190	4090	4060	4020	4440	3530	3640	4510	4680	4520
3	No load current	mA	67.7	69.9	29.2	24	19	16.5	9.41	8.2	8.45	7.16	5.67
4	Nominal speed	rpm	3460	4640	2940	2650	2620	3030	2070	2180	3060	3210	3050
5	Nominal torque (max. continuous torque)	mNm	4.53	5.08	11.3	13.3	13.4	13.2	12.9	12.9	12.8	12.6	12.5
6	Nominal current (max. continuous current)	A	0.84	0.84	0.84	0.814	0.647	0.529	0.33	0.284	0.262	0.214	0.171
7	Stall torque	mNm	35.9	44.1	39.2	38.1	38.2	41.4	31.4	32.5	40.1	40.3	38.5
8	Starting current	A	6.15	6.71	2.83	2.27	1.8	1.62	0.783	0.697	0.797	0.665	0.513
9	Max. efficiency	%	81	81	81	81	81	81	80	80	81	81	81
	Characteristics												
10	Terminal resistance	Ω	0.39	0.536	2.12	3.17	4.99	7.41	19.2	25.8	30.1	45.1	70.2
11	Terminal inductance	mH	0.0402	0.0509	0.227	0.332	0.528	0.77	1.9	2.57	2.99	4.34	6.68
12	Torque constant	mNm/A	5.84	6.57	13.9	16.8	21.2	25.5	40.1	46.7	50.3	60.6	75.2
13	Speed constant	rpm/V	1640	1450	689	569	451	374	238	205	190	158	127
14	Speed / torque gradient	rpm/mNm	109	119	105	108	106	108	114	113	114	117	119
15	Mechanical time constant	ms	16.6	16.1	15	14.9	14.9	14.9	14.9	14.9	14.9	15	15
16	Rotor inertia	gcm²	14.4	12.9	13.6	13.2	13.3	13.1	12.6	12.6	12.5	12.2	12.1

Specifications

	Thermal data	
17	Thermal resistance housing-ambient	13.2 K/W
18	Thermal resistance winding-housing	3.2 K/W
19	Thermal time constant winding	12.5 s
20	Thermal time constant motor	473 s
21	Ambient temperature	-30…+65°C
22	Max. permissible winding temperature	+85°C
	Mechanical data (sleeve bearings)	
23	Max. permissible speed	6700 rpm
24	Axial play	0.1 - 0.2 mm
25	Radial play	0.012 mm
26	Max. axial load (dynamic)	1.7 N
27	Max. force for press fits (static)	80 N
	(static, shaft supported)	1200 N
28	Max. radial loading, 5 mm from flange	5.5 N
	Mechanical data (ball bearings)	
23	Max. permissible speed	6700 rpm
24	Axial play	0.1 - 0.2 mm
25	Radial play	0.025 mm
26	Max. axial load (dynamic)	5.0 N
27	Max. force for press fits (static)	75 N
	(static, shaft supported)	1200 N
28	Max. radial loading, 5 mm from flange	20.5 N
	Other specifications	
29	Number of pole pairs	1
30	Number of commutator segments	13
31	Weight of motor	119 g

CLL = Capacitor Long Life

Values listed in the table are nominal.
Explanation of the figures on page 79.

Option
Ball bearings in place of sleeve bearings
Without CLL

Operating Range

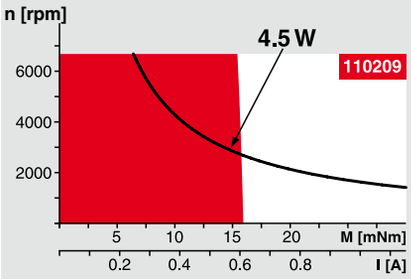

Comments

Continuous operation
In observation of above listed thermal resistance (lines 17 and 18) the maximum permissible winding temperature will be reached during continuous operation at 25°C ambient.
= Thermal limit.

Short term operation
The motor may be briefly overloaded (recurring).

Assigned power rating

maxon Modular System

Overview on page 20–25

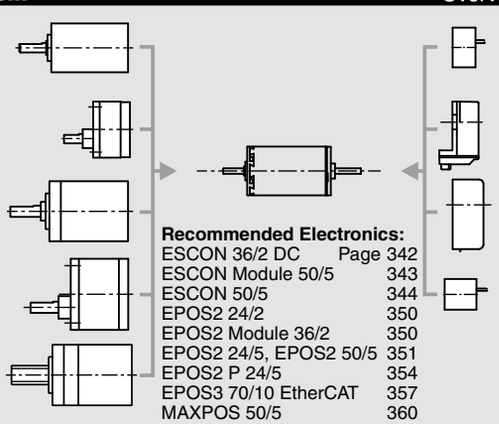

Planetary Gearhead
∅26 mm
0.75 - 4.5 Nm
Page 270

Spur Gearhead
∅30 mm
0.07 - 0.2 Nm
Page 271

Planetary Gearhead
∅32 mm
0.4 - 6.0 Nm
Page 272/273/276

Spur Gearhead
∅38 mm
0.1 - 0.6 Nm
Page 282

Spindle Drive
∅32 mm
Page 301–303

Recommended Electronics:

ESCON 36/2 DC	Page 342
ESCON Module 50/5	343
ESCON 50/5	344
EPOS2 24/2	350
EPOS2 Module 36/2	350
EPOS2 24/5, EPOS2 50/5	351
EPOS2 P 24/5	354
EPOS3 70/10 EtherCAT	357
MAXPOS 50/5	360
Notes	**22**

Encoder MR
128 - 1000 CPT,
3 channels
Page 319

Encoder Enc
22 mm
100 CPT, 2 channels
Page 324

Encoder HED_ 5540
500 CPT,
3 channels
Page 326/327

Encoder MEnc
∅13 mm
16 CPT, 2 channels
Page 335

A-max 26 ∅26 mm, Graphite Brushes, 6 Watt

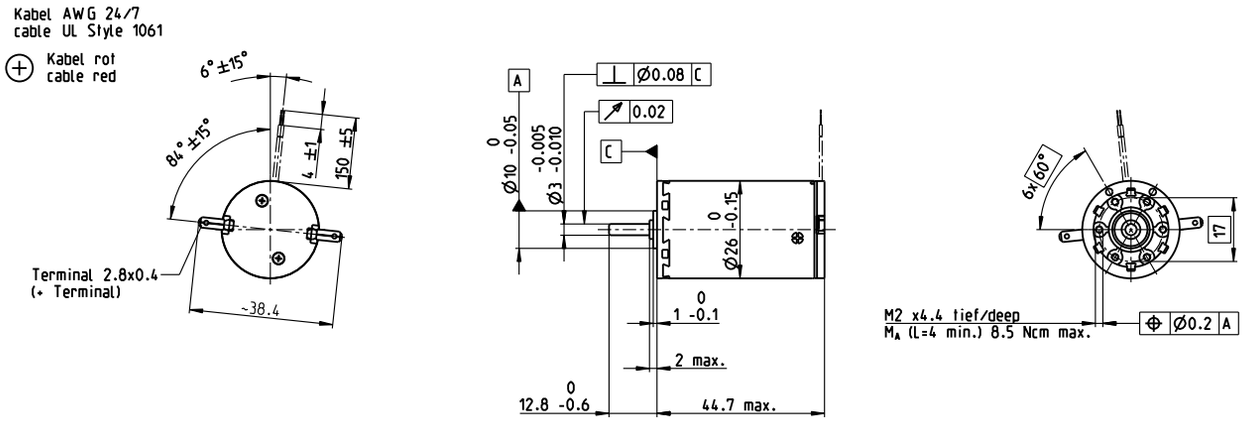

M 1:2

Stock program
Standard program
Special program (on request)

Part Numbers

with terminals		110923	110924	110925	**110926**	110927	110928	110929	**110930**	110931	110932	110933	110934
with cables		353132	353133	353134	353135	340503	353136	353137	353138	353139	353140	353141	353605
Motor Data													
Values at nominal voltage													
1 Nominal voltage	V	7.2	9	12	12	18	18	24	24	30	36	42	48
2 No load speed	rpm	9790	10500	10300	8510	8380	7510	8680	7950	8890	8500	8230	6280
3 No load current	mA	121	106	77.7	60.2	39.4	34.2	31	27.7	25.5	20.1	16.5	10.3
4 Nominal speed	rpm	8580	8840	8510	6210	5890	5000	6050	5250	6350	5950	5630	3590
5 Nominal torque (max. continuous torque)	mNm	6.67	7.91	11	13.6	14.5	14.6	13.7	13.4	14.1	14.1	13.9	13.8
6 Nominal current (max. continuous current)	A	1.08	1.08	1.08	1.08	0.755	0.679	0.554	0.498	0.467	0.373	0.305	0.203
7 Stall torque	mNm	54.6	51.4	63.4	50.9	49.4	44	45.7	39.8	49.8	47.6	44.6	32.9
8 Starting current	A	7.89	6.36	5.79	3.84	2.45	1.96	1.76	1.41	1.57	1.2	0.931	0.461
9 Max. efficiency	%	77	76	79	77	77	76	76	74	76	76	76	73
Characteristics													
10 Terminal resistance	Ω	0.912	1.41	2.07	3.13	7.36	9.19	13.6	17	19.1	30.1	45.1	104
11 Terminal inductance	mH	0.101	0.138	0.254	0.372	0.861	1.07	1.42	1.69	2.13	3.35	4.85	10.8
12 Torque constant	mNm/A	6.92	8.07	11	13.3	20.2	22.5	25.9	28.3	31.7	39.8	47.9	71.4
13 Speed constant	rpm/V	1380	1180	872	720	473	425	368	338	301	240	199	134
14 Speed / torque gradient	rpm/mNm	182	207	165	170	173	174	193	204	181	181	188	195
15 Mechanical time constant	ms	23.5	23.7	23.4	23.5	23.6	23.6	23.8	24	23.8	23.8	23.9	24.1
16 Rotor inertia	gcm^2	12.3	10.9	13.6	13.2	13.1	13	11.8	11.2	12.5	12.5	12.2	11.8

Specifications

Thermal data	
17 Thermal resistance housing-ambient	13.2 K/W
18 Thermal resistance winding-housing	3.2 K/W
19 Thermal time constant winding	11.7 s
20 Thermal time constant motor	423 s
21 Ambient temperature	-30…+85°C
22 Max. permissible winding temperature	+125°C
Mechanical data (ball bearings)	
23 Max. permissible speed	10400 rpm
24 Axial play	0.1 - 0.2 mm
25 Radial play	0.025 mm
26 Max. axial load (dynamic)	5 N
27 Max. force for press fits (static)	75 N
28 Max. radial loading, 5 mm from flange	20.5 N
Mechanical data (sleeve bearings)	
23 Max. permissible speed	10400 rpm
24 Axial play	0.1 - 0.2 mm
25 Radial play	0.012 mm
26 Max. axial load (dynamic)	1.7 N
27 Max. force for press fits (static)	80 N
28 Max. radial loading, 5 mm from flange	5.5 N
Other specifications	
29 Number of pole pairs	1
30 Number of commutator segments	13
31 Weight of motor	98 g

Values listed in the table are nominal.
Explanation of the figures on page 79.

Option
Sleeve bearings in place of ball bearings

Operating Range

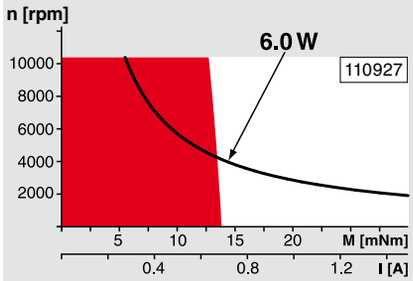

Comments

Continuous operation
In observation of above listed thermal resistance (lines 17 and 18) the maximum permissible winding temperature will be reached during continuous operation at 25°C ambient.
= Thermal limit.

Short term operation
The motor may be briefly overloaded (recurring).

Assigned power rating

maxon Modular System

Overview on page 20–25

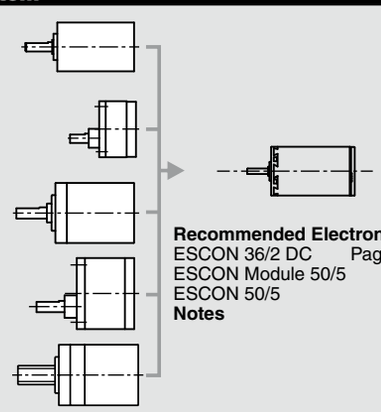

Planetary Gearhead
∅26 mm
0.75 - 4.5 Nm
Page 270

Spur Gearhead
∅30 mm
0.07 - 0.2 Nm
Page 271

Planetary Gearhead
∅32 mm
0.4 - 6.0 Nm
Page 272/273/276

Spur Gearhead
∅38 mm
0.1 - 0.6 Nm
Page 282

Spindle Drive
∅32 mm
Page 301–303

Recommended Electronics:

ESCON 36/2 DC	Page 342
ESCON Module 50/5	343
ESCON 50/5	344
Notes	**22**

A-max 26 ∅26 mm, Graphite Brushes, 6 Watt

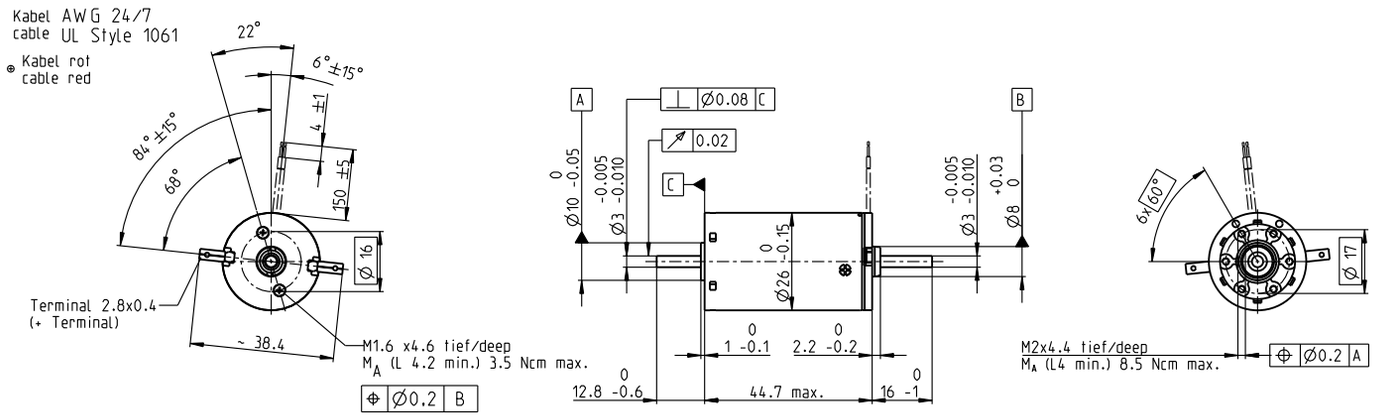

M 1:2

Stock program
Standard program
Special program (on request)

Part Numbers

with terminals		110946	110947	110948	110949	110950	110951	110952	110953	110954	110955	110956	110957	
with cables		353143	353144	353145	353146	353147	353148	353149	353150	353151	353152	353153	353154	
Motor Data														
Values at nominal voltage														
1 Nominal voltage	V	7.2	9	12	12	18	18	24	24	30	36	42	48	
2 No load speed	rpm	9790	10500	10300	8510	8380	7510	8680	7950	8890	8500	8230	6280	
3 No load current	mA	121	106	77.7	60.2	39.4	34.2	31	27.7	25.5	20.1	16.5	10.3	
4 Nominal speed	rpm	8580	8840	8510	6210	5890	5000	6050	5250	6350	5950	5630	3590	
5 Nominal torque (max. continuous torque)	mNm	6.67	7.91	11	13.6	14.5	14.6	13.7	13.4	14.1	14.1	13.9	13.8	
6 Nominal current (max. continuous current)	A	1.08	1.08	1.08	1.08	0.755	0.679	0.554	0.498	0.467	0.373	0.305	0.203	
7 Stall torque	mNm	54.6	51.4	63.4	50.9	49.4	44	45.7	39.8	49.8	47.6	44.6	32.9	
8 Starting current	A	7.89	6.36	5.79	3.84	2.45	1.96	1.76	1.41	1.57	1.2	0.931	0.461	
9 Max. efficiency	%	77.1	76.2	78.5	76.8	76.5	75.6	75.6	74.3	76.4	76.1	75.5	72.7	
Characteristics														
10 Terminal resistance	Ω	0.912	1.41	2.07	3.13	7.36	9.19	13.6	17	19.1	30.1	45.1	104	
11 Terminal inductance	mH	0.101	0.138	0.254	0.372	0.861	1.07	1.42	1.69	2.13	3.35	4.85	10.8	
12 Torque constant	mNm/A	6.92	8.07	11	13.3	20.2	22.5	25.9	28.3	31.7	39.8	47.9	71.4	
13 Speed constant	rpm/V	1380	1180	872	720	473	425	368	338	301	240	199	134	
14 Speed / torque gradient	rpm/mNm	182	207	165	170	173	174	193	204	181	181	188	195	
15 Mechanical time constant	ms	23.5	23.7	23.4	23.5	23.6	23.6	23.8	24	23.8	23.8	23.9	24.1	
16 Rotor inertia	gcm²	12.3	10.9	13.6	13.2	13.1	13	11.8	11.2	12.5	12.5	12.2	11.8	

Specifications

Thermal data	
17 Thermal resistance housing-ambient	13.2 K/W
18 Thermal resistance winding-housing	3.2 K/W
19 Thermal time constant winding	11.7 s
20 Thermal time constant motor	660 s
21 Ambient temperature	-30…+85°C
22 Max. permissible winding temperature	+125°C
Mechanical data (ball bearings)	
23 Max. permissible speed	10400 rpm
24 Axial play	0.1 - 0.2 mm
25 Radial play	0.025 mm
26 Max. axial load (dynamic)	5 N
27 Max. force for press fits (static)	75 N
(static, shaft supported)	1200 N
28 Max. radial loading, 5 mm from flange	20.5 N
Mechanical data (sleeve bearings)	
23 Max. permissible speed	10400 rpm
24 Axial play	0.1 - 0.2 mm
25 Radial play	0.012 mm
26 Max. axial load (dynamic)	1.7 N
27 Max. force for press fits (static)	80 N
(static, shaft supported)	1200 N
28 Max. radial loading, 5 mm from flange	5.5 N
Other specifications	
29 Number of pole pairs	1
30 Number of commutator segments	13
31 Weight of motor	100 g

Values listed in the table are nominal.
Explanation of the figures on page 79.

Option
Sleeve bearings in place of ball bearings

Operating Range

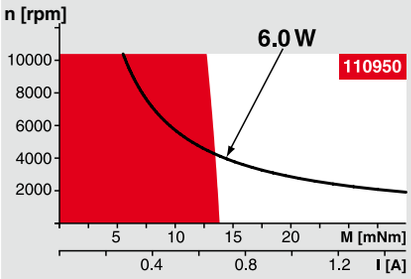

Comments

Continuous operation
In observation of above listed thermal resistance (lines 17 and 18) the maximum permissible winding temperature will be reached during continuous operation at 25°C ambient.
= Thermal limit.

Short term operation
The motor may be briefly overloaded (recurring).

Assigned power rating

maxon Modular System

Overview on page 20–25

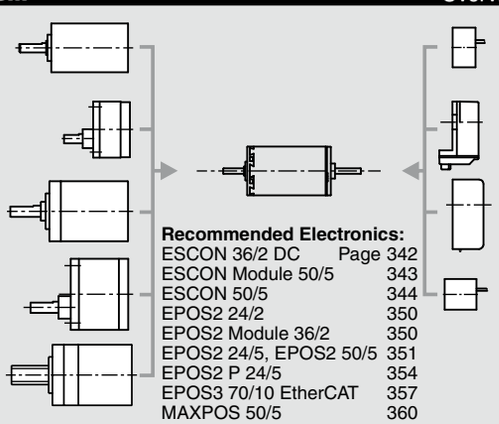

Planetary Gearhead
∅26 mm
0.75 - 4.5 Nm
Page 270

Spur Gearhead
∅30 mm
0.07 - 0.2 Nm
Page 271

Planetary Gearhead
∅32 mm
0.4 - 6.0 Nm
Page 272/273/276

Spur Gearhead
∅38 mm
0.1 - 0.6 Nm
Page 282

Spindle Drive
∅32 mm
Page 301–303

Recommended Electronics:

ESCON 36/2 DC	Page 342
ESCON Module 50/5	343
ESCON 50/5	344
EPOS2 24/2	350
EPOS2 Module 36/2	350
EPOS2 24/5, EPOS2 50/5	351
EPOS2 P 24/5	354
EPOS3 70/10 EtherCAT	357
MAXPOS 50/5	360
Notes	**22**

Encoder MR
128 - 1000 CPT,
3 channels
Page 319

Encoder Enc
22 mm
100 CPT, 2 channels
Page 324

Encoder HED_ 5540
500 CPT,
3 channels
Page 326/327

Encoder MEnc
∅13 mm
16 CPT, 2 channels
Page 335

April 2014 edition / subject to change

A-max 26 ∅26 mm, Graphite Brushes, 11 Watt

High Power

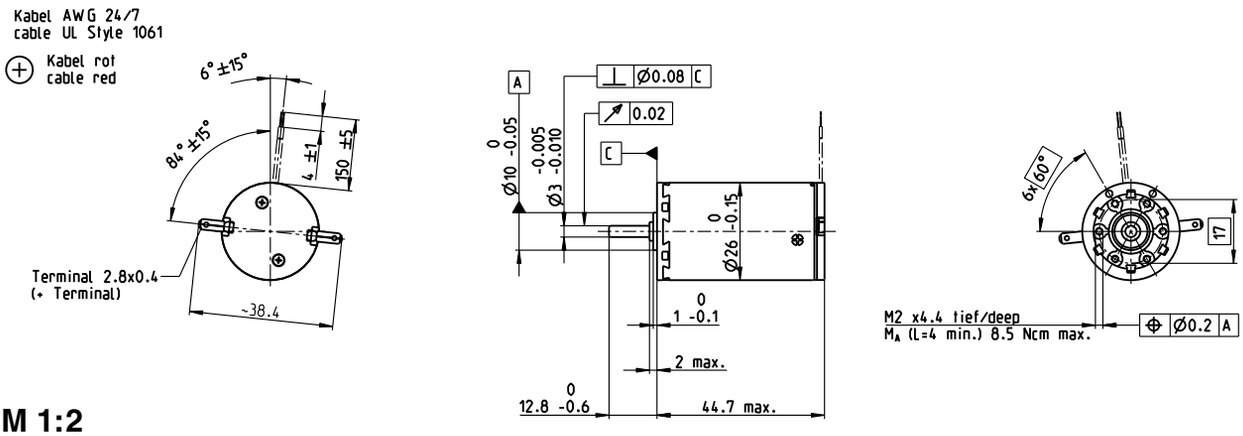

M 1:2

Stock program
Standard program
Special program (on request)

Part Numbers

with terminals	110935	110936	**110937**	110938	110939	**110940**	110941	110942	110943	110944	110945
with cables	139852	353166	353167	353168	353169	206344	353171	314214	202893	353174	353175

Motor Data

	Values at nominal voltage												
1	Nominal voltage	V	6	7.2	12	15	18	24	30	36	42	48	48
2	No load speed	rpm	9740	10400	8190	8450	8040	8890	7050	7280	7880	7470	6010
3	No load current	mA	143	130	57	47.5	37.1	31.7	18.9	16.4	15.5	12.7	9.66
4	Nominal speed	rpm	9210	9700	6720	6620	6080	6910	5000	5230	5840	5390	3900
5	Nominal torque (max. continuous torque)	mNm	5.48	6.26	14.2	17.4	18.7	18.4	18.2	18.2	18.1	17.8	17.9
6	Nominal current (max. continuous current)	A	1.08	1.08	1.08	1.08	0.919	0.749	0.47	0.404	0.373	0.305	0.247
7	Stall torque	mNm	102	96.4	80.2	80.5	77.1	83.3	63	65.2	70.3	64.5	51.4
8	Starting current	A	17.4	14.7	5.79	4.8	3.64	3.26	1.57	1.4	1.4	1.06	0.684
9	Max. efficiency	%	83	82	81	81	81	82	80	80	80	80	78
	Characteristics												
10	Terminal resistance	Ω	0.345	0.49	2.07	3.13	4.94	7.36	19.1	25.8	30.1	45.1	70.2
11	Terminal inductance	mH	0.0402	0.0509	0.227	0.333	0.529	0.77	1.9	2.58	2.99	4.34	6.68
12	Torque constant	mNm/A	5.84	6.57	13.9	16.8	21.2	25.5	40.1	46.7	50.3	60.6	75.2
13	Speed constant	rpm/V	1640	1450	689	569	451	374	238	205	190	158	127
14	Speed / torque gradient	rpm/mNm	96.6	109	103	106	105	108	113	113	113	117	119
15	Mechanical time constant	ms	14.6	14.7	14.6	14.7	14.7	14.7	14.9	14.9	14.9	15	15
16	Rotor inertia	gcm²	14.4	12.9	13.6	13.2	13.3	13.1	12.5	12.6	12.5	12.2	12.1

Specifications

	Thermal data	
17	Thermal resistance housing-ambient	13.2 K/W
18	Thermal resistance winding-housing	3.2 K/W
19	Thermal time constant winding	13.8 s
20	Thermal time constant motor	473 s
21	Ambient temperature	-30…+85°C
22	Max. permissible winding temperature	+125°C
	Mechanical data (ball bearings)	
23	Max. permissible speed	10400 rpm
24	Axial play	0.1 - 0.2 mm
25	Radial play	0.025 mm
26	Max. axial load (dynamic)	5 N
27	Max. force for press fits (static)	75 N
28	Max. radial loading, 5 mm from flange	20.5 N
	Mechanical data (sleeve bearings)	
23	Max. permissible speed	10400 rpm
24	Axial play	0.1 - 0.2 mm
25	Radial play	0.012 mm
26	Max. axial load (dynamic)	1.7 N
27	Max. force for press fits (static)	80 N
28	Max. radial loading, 5 mm from flange	5.5 N
	Other specifications	
29	Number of pole pairs	1
30	Number of commutator segments	13
31	Weight of motor	117 g

Values listed in the table are nominal.
Explanation of the figures on page 79.

Option
Sleeve bearings in place of ball bearings

Operating Range

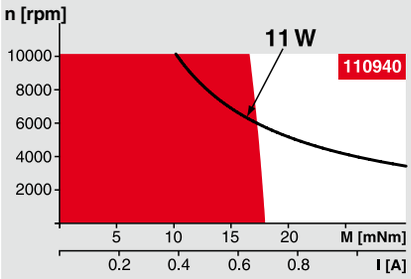

Comments

Continuous operation
In observation of above listed thermal resistance (lines 17 and 18) the maximum permissible winding temperature will be reached during continuous operation at 25°C ambient.
= Thermal limit.

Short term operation
The motor may be briefly overloaded (recurring).

Assigned power rating

maxon Modular System

Overview on page 20–25

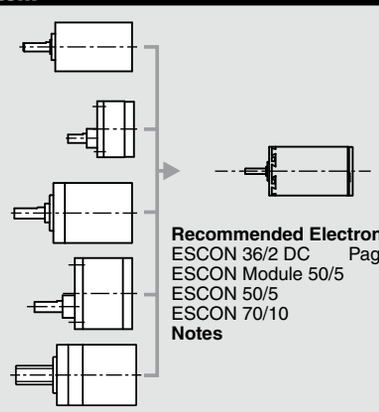

Planetary Gearhead
∅26 mm
0.75 - 4.5 Nm
Page 270

Spur Gearhead
∅30 mm
0.07 - 0.2 Nm
Page 271

Planetary Gearhead
∅32 mm
0.4 - 6.0 Nm
Page 272/273/276

Spur Gearhead
∅38 mm
0.1 - 0.6 Nm
Page 282

Spindle Drive
∅32 mm
Page 301–303

Recommended Electronics:

ESCON 36/2 DC	Page 342
ESCON Module 50/5	343
ESCON 50/5	344
ESCON 70/10	344
Notes	**22**

A-max 26 ∅26 mm, Graphite Brushes, 11 Watt

High Power

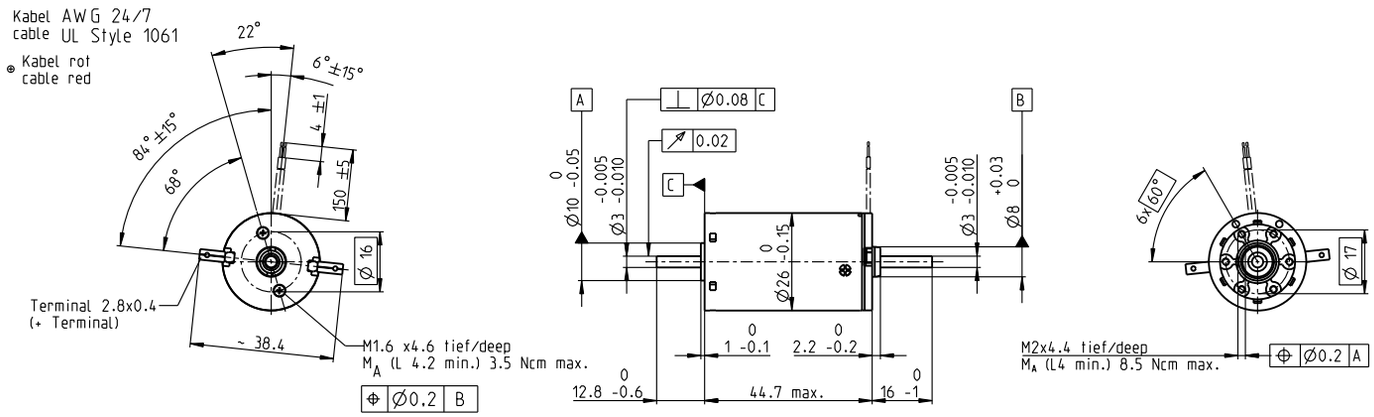

M 1:2

Stock program
Standard program
Special program (on request)

Part Numbers

with terminals	110958	110959	110960	110961	110962	110963	110964	110965	110966	110967	110968
with cables	353606	353607	353608	353609	353610	353611	353612	353613	353614	353615	353616

Motor Data

	Values at nominal voltage												
1	Nominal voltage	V	6	7.2	12	15	18	24	30	36	42	48	48
2	No load speed	rpm	9740	10400	8190	8450	8040	8890	7050	7280	7880	7470	6010
3	No load current	mA	143	130	57	47.5	37.1	31.7	18.9	16.4	15.5	12.7	9.66
4	Nominal speed	rpm	9210	9700	6720	6620	6080	6910	5000	5230	5840	5390	3900
5	Nominal torque (max. continuous torque)	mNm	5.48	6.26	14.2	17.4	18.7	18.4	18.2	18.2	18.1	17.8	17.9
6	Nominal current (max. continuous current)	A	1.08	1.08	1.08	1.08	0.919	0.749	0.47	0.404	0.373	0.305	0.247
7	Stall torque	mNm	102	96.4	80.2	80.5	77.1	83.3	63	65.2	70.3	64.5	51.4
8	Starting current	A	17.4	14.7	5.79	4.8	3.64	3.26	1.57	1.4	1.4	1.06	0.684
9	Max. efficiency	%	83	82	81	81	81	82	80	80	80	80	78
	Characteristics												
10	Terminal resistance	Ω	0.345	0.49	2.07	3.13	4.94	7.36	19.1	25.8	30.1	45.1	70.2
11	Terminal inductance	mH	0.0402	0.0509	0.227	0.333	0.529	0.77	1.9	2.58	2.99	4.34	6.68
12	Torque constant	mNm/A	5.84	6.57	13.9	16.8	21.2	25.5	40.1	46.7	50.3	60.6	75.2
13	Speed constant	rpm/V	1640	1450	689	569	451	374	238	205	190	158	127
14	Speed / torque gradient	rpm/mNm	96.6	109	103	106	105	108	113	113	113	117	119
15	Mechanical time constant	ms	14.6	14.7	14.6	14.7	14.7	14.7	14.9	14.9	14.9	15	15
16	Rotor inertia	gcm²	14.4	12.9	13.6	13.2	13.3	13.1	12.5	12.6	12.5	12.2	12.1

Specifications

	Thermal data	
17	Thermal resistance housing-ambient	13.2 K/W
18	Thermal resistance winding-housing	3.2 K/W
19	Thermal time constant winding	13.8 s
20	Thermal time constant motor	473 s
21	Ambient temperature	-30…+85°C
22	Max. permissible winding temperature	+125°C
	Mechanical data (ball bearings)	
23	Max. permissible speed	10400 rpm
24	Axial play	0.1 - 0.2 mm
25	Radial play	0.025 mm
26	Max. axial load (dynamic)	5 N
27	Max. force for press fits (static)	75 N
	(static, shaft supported)	1200 N
28	Max. radial loading, 5 mm from flange	20.5 N
	Mechanical data (sleeve bearings)	
23	Max. permissible speed	10400 rpm
24	Axial play	0.1 - 0.2 mm
25	Radial play	0.012 mm
26	Max. axial load (dynamic)	1.7 N
27	Max. force for press fits (static)	80 N
	(static, shaft supported)	1200 N
28	Max. radial loading, 5 mm from flange	5.5 N
	Other specifications	
29	Number of pole pairs	1
30	Number of commutator segments	13
31	Weight of motor	119 g

Values listed in the table are nominal.
Explanation of the figures on page 79.

Option
Sleeve bearings in place of ball bearings

Operating Range

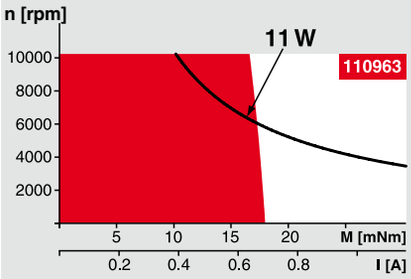

Comments

Continuous operation
In observation of above listed thermal resistance (lines 17 and 18) the maximum permissible winding temperature will be reached during continuous operation at 25°C ambient.
= Thermal limit.

Short term operation
The motor may be briefly overloaded (recurring).

Assigned power rating

maxon Modular System

Overview on page 20–25

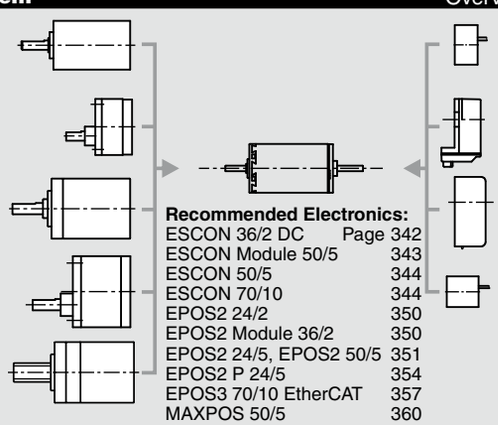

Planetary Gearhead
∅26 mm
0.75 - 4.5 Nm
Page 270

Spur Gearhead
∅30 mm
0.07 - 0.2 Nm
Page 271

Planetary Gearhead
∅32 mm
0.4 - 6.0 Nm
Page 272/273/276

Spur Gearhead
∅38 mm
0.1 - 0.6 Nm
Page 282

Spindle Drive
∅32 mm
Page 301–303

Recommended Electronics:

ESCON 36/2 DC	Page 342
ESCON Module 50/5	343
ESCON 50/5	344
ESCON 70/10	344
EPOS2 24/2	350
EPOS2 Module 36/2	350
EPOS2 24/5, EPOS2 50/5	351
EPOS2 P 24/5	354
EPOS3 70/10 EtherCAT	357
MAXPOS 50/5	360
Notes	**22**

Encoder MR
128 - 1000 CPT,
3 channels
Page 319

Encoder Enc
22 mm
100 CPT, 2 channels
Page 324

Encoder HED_ 5540
500 CPT,
3 channels
Page 326/327

Encoder MEnc
∅13 mm
16 CPT, 2 channels
Page 335

A-max 32 ∅32 mm, Graphite Brushes, 15 Watt

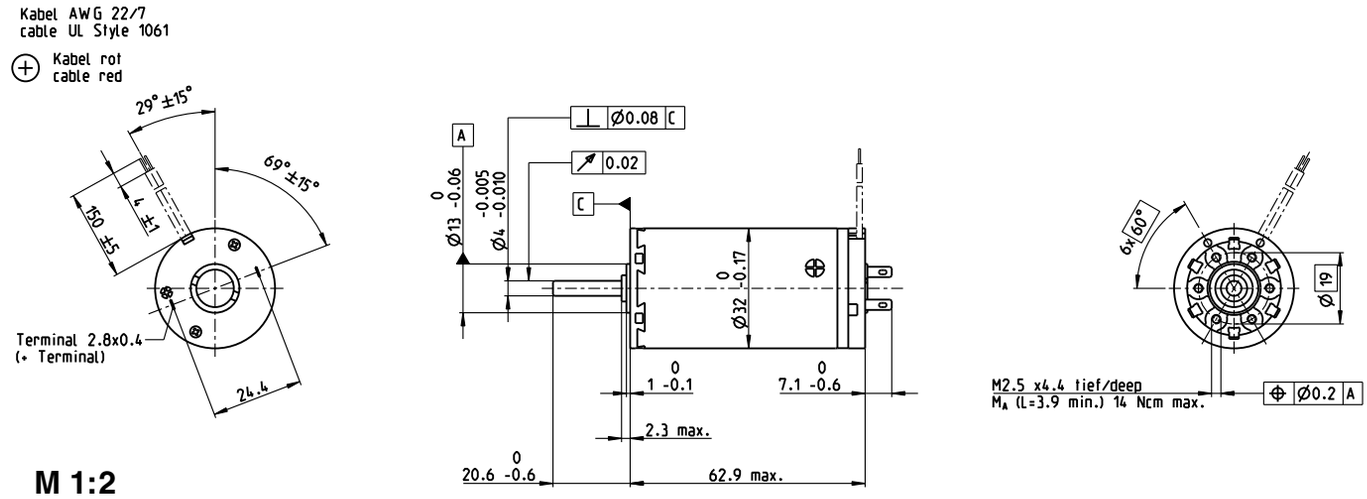

M 1:2

Stock program
Standard program
Special program (on request)

Part Numbers

with terminals	236643	236644	**236645**	236646	**236647**	236648	236649	236650
with cables	353184	353185	353186	353187	353188	353189	353190	353191

Motor Data

	Values at nominal voltage									
1	Nominal voltage	V	6	9	12	18	24	30	36	48
2	No load speed	rpm	5870	4940	4680	5280	5930	5870	5830	3870
3	No load current	mA	154	83.5	58.6	44.9	38.7	30.6	25.3	11.8
4	Nominal speed	rpm	4110	3090	2920	3590	4210	4160	4100	2090
5	Nominal torque (max. continuous torque)	mNm	36.5	35	37.2	38.3	37.3	37.5	37.1	37
6	Nominal current (max. continuous current)	A	3.95	2.13	1.6	1.23	1.01	0.806	0.661	0.328
7	Stall torque	mNm	127	95.3	101	122	130	130	127	81.6
8	Starting current	A	13.2	5.58	4.19	3.78	3.42	2.7	2.17	0.7
9	Max. efficiency	%	78	77	77	79	80	80	80	76
	Characteristics									
10	Terminal resistance	Ω	0.454	1.61	2.86	4.76	7.03	11.1	16.6	68.6
11	Terminal inductance	mH	0.0657	0.209	0.416	0.739	1.04	1.66	2.43	9.71
12	Torque constant	mNm/A	9.58	17.1	24.1	32.2	38.2	48.2	58.3	117
13	Speed constant	rpm/V	996	559	396	297	250	198	164	81.9
14	Speed / torque gradient	rpm/mNm	47.2	52.8	47	44	46	45.6	46.6	48.2
15	Mechanical time constant	ms	21.9	21.7	21.4	21.3	21.3	21.3	21.4	21.5
16	Rotor inertia	gcm^2	44.2	39.2	43.5	46.2	44.2	44.6	43.8	42.6

Specifications

	Thermal data	
17	Thermal resistance housing-ambient	7.5 K/W
18	Thermal resistance winding-housing	2.1 K/W
19	Thermal time constant winding	17.8 s
20	Thermal time constant motor	791 s
21	Ambient temperature	-20…+85°C
22	Max. permissible winding temperature	+125°C
	Mechanical data (ball bearings)	
23	Max. permissible speed	6000 rpm
24	Axial play	0.12 - 0.22 mm
25	Radial play	0.025 mm
26	Max. axial load (dynamic)	7.6 N
27	Max. force for press fits (static)	110 N
28	Max. radial loading, 5 mm from flange	32 N
	Mechanical data (sleeve bearings)	
23	Max. permissible speed	6000 rpm
24	Axial play	0.12 - 0.22 mm
25	Radial play	0.012 mm
26	Max. axial load (dynamic)	5.0 N
27	Max. force for press fits (static)	110 N
28	Max. radial loading, 5 mm from flange	10.5 N
	Other specifications	
29	Number of pole pairs	1
30	Number of commutator segments	13
31	Weight of motor	211 g

Values listed in the table are nominal.
Explanation of the figures on page 79.

Option
Sleeve bearings in place of ball bearings

Operating Range

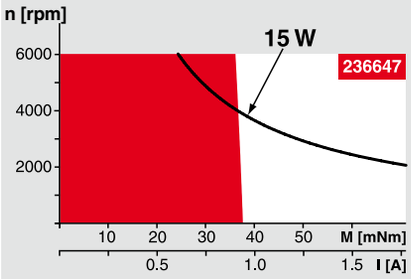

Comments

Continuous operation
In observation of above listed thermal resistance (lines 17 and 18) the maximum permissible winding temperature will be reached during continuous operation at 25°C ambient.
= Thermal limit.

Short term operation
The motor may be briefly overloaded (recurring).

Assigned power rating

maxon Modular System

Overview on page 20–25

Planetary Gearhead
∅32 mm
0.75 - 6.0 Nm
Page 272–278

Spur Gearhead
∅38 mm
0.1 - 0.6 Nm
Page 282

Spindle Drive
∅32 mm
Page 301–303

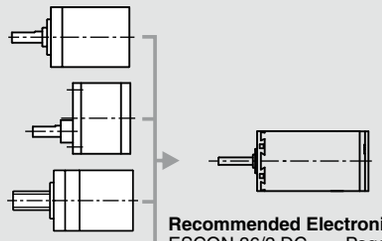

Recommended Electronics:

ESCON 36/2 DC	Page 342
ESCON Module 50/5	343
ESCON 50/5	344
ESCON 70/10	344
Notes	**22**

A-max 32 ∅32 mm, Graphite Brushes, 15 Watt

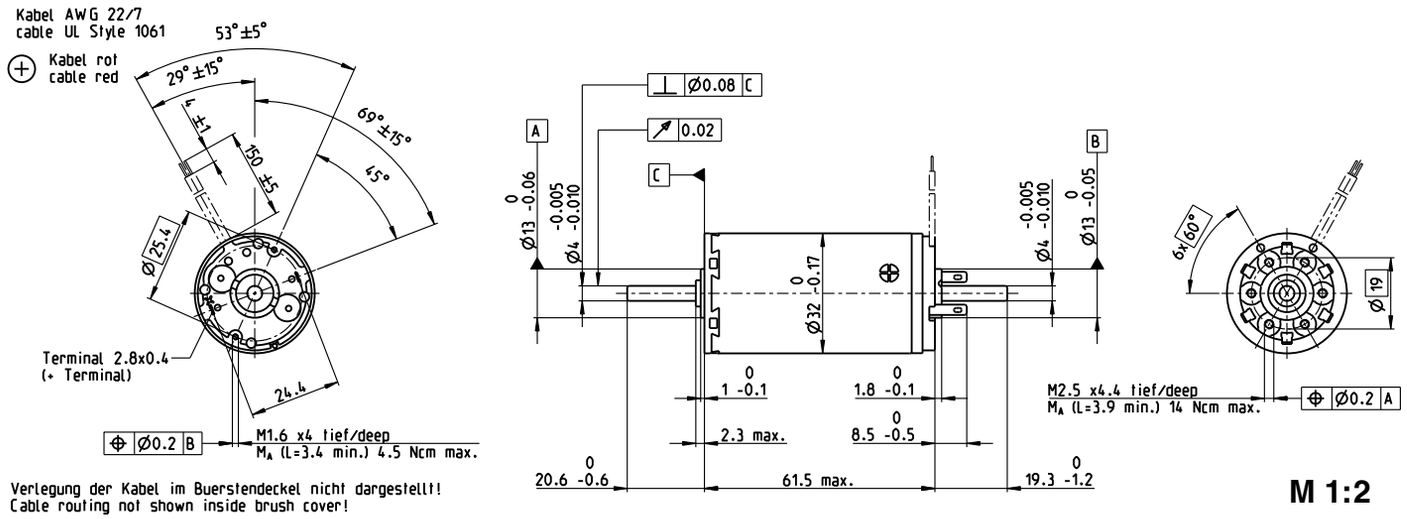

Stock program
Standard program
Special program (on request)

Part Numbers

with terminals	236651	236652	236653	236654	236655	236656	236657	236658
with cables	353220	353221	353222	353223	353224	353225	353226	353227

Motor Data

	Values at nominal voltage									
1	Nominal voltage	V	6	9	12	18	24	30	36	48
2	No load speed	rpm	5870	4940	4680	5280	5930	5870	5830	3870
3	No load current	mA	154	83.5	58.6	44.9	38.7	30.6	25.3	11.8
4	Nominal speed	rpm	4110	3090	2920	3590	4210	4160	4100	2090
5	Nominal torque (max. continuous torque)	mNm	36.5	35	37.2	38.3	37.3	37.5	37.1	37
6	Nominal current (max. continuous current)	A	3.95	2.13	1.6	1.23	1.01	0.806	0.661	0.328
7	Stall torque	mNm	127	95.3	101	122	130	130	127	81.6
8	Starting current	A	13.2	5.58	4.19	3.78	3.42	2.7	2.17	0.7
9	Max. efficiency	%	78	77	77	79	80	80	80	76
	Characteristics									
10	Terminal resistance	Ω	0.454	1.61	2.86	4.76	7.03	11.1	16.6	68.6
11	Terminal inductance	mH	0.0657	0.209	0.416	0.739	1.04	1.66	2.43	9.71
12	Torque constant	mNm/A	9.58	17.1	24.1	32.2	38.2	48.2	58.3	117
13	Speed constant	rpm/V	996	559	396	297	250	198	164	81.9
14	Speed / torque gradient	rpm/mNm	47.2	52.8	47	44	46	45.6	46.6	48.2
15	Mechanical time constant	ms	21.9	21.7	21.4	21.3	21.3	21.3	21.4	21.5
16	Rotor inertia	gcm²	44.2	39.2	43.5	46.2	44.2	44.6	43.8	42.6

Specifications

	Thermal data	
17	Thermal resistance housing-ambient	7.5 K/W
18	Thermal resistance winding-housing	2.1 K/W
19	Thermal time constant winding	17.8 s
20	Thermal time constant motor	791 s
21	Ambient temperature	-20…+85°C
22	Max. permissible winding temperature	+125°C
	Mechanical data (ball bearings)	
23	Max. permissible speed	6000 rpm
24	Axial play	0.12 - 0.22 mm
25	Radial play	0.025 mm
26	Max. axial load (dynamic)	7.6 N
27	Max. force for press fits (static)	110 N
	(static, shaft supported)	2000 N
28	Max. radial loading, 5 mm from flange	32 N
	Mechanical data (sleeve bearings)	
23	Max. permissible speed	6000 rpm
24	Axial play	0.12 - 0.22 mm
25	Radial play	0.012 mm
26	Max. axial load (dynamic)	5.0 N
27	Max. force for press fits (static)	110 N
	(static, shaft supported)	2000 N
28	Max. radial loading, 5 mm from flange	10.5 N
	Other specifications	
29	Number of pole pairs	1
30	Number of commutator segments	13
31	Weight of motor	211 g

Values listed in the table are nominal.
Explanation of the figures on page 79.

Option
Sleeve bearings in place of ball bearings

Operating Range

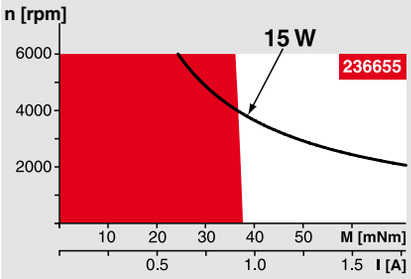

Comments

Continuous operation
In observation of above listed thermal resistance (lines 17 and 18) the maximum permissible winding temperature will be reached during continuous operation at 25°C ambient.
= Thermal limit.

Short term operation
The motor may be briefly overloaded (recurring).

Assigned power rating

maxon Modular System

Overview on page 20–25

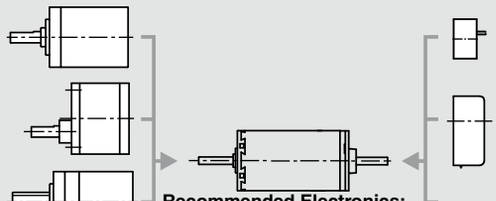

Planetary Gearhead
∅32 mm
0.75 - 6.0 Nm
Page 272–277

Spur Gearhead
∅38 mm
0.1 - 0.6 Nm
Page 282

Spindle Drive
∅32 mm
Page 301–303

Recommended Electronics:

ESCON 36/2 DC	Page 342
ESCON Module 50/5	343
ESCON 50/5	344
ESCON 70/10	344
EPOS2 24/2	350
EPOS2 Module 36/2	350
EPOS2 24/5, EPOS2 50/5	351
EPOS2 P 24/5	354
EPOS3 70/10 EtherCAT	357
MAXPOS 50/5	360
Notes	**22**

Encoder MR
256 - 1024 CPT,
3 channels
Page 320

Encoder HED_ 5540
500 CPT,
3 channels
Page 326/327

A-max 32 ∅32 mm, Graphite Brushes, 20 Watt

High Power

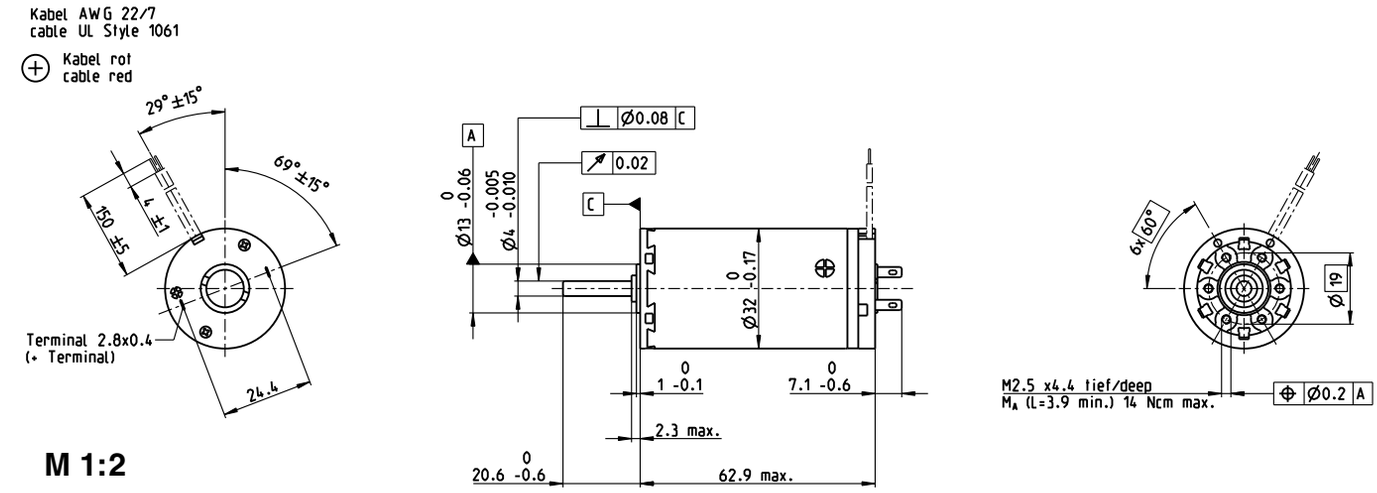

Stock program
Standard program
Special program (on request)

Part Numbers

with terminals	236659	236660	**236661**	**236662**	236663	236664	236665
with cables	353230	353231	353232	262500	341970	353233	353234

Motor Data

	Values at nominal voltage								
1	Nominal voltage	V	6	9	12	24	30	36	42
2	No load speed	rpm	4880	5000	4670	6460	6160	5860	5650
3	No load current	mA	123	84.2	58.2	42.8	32.3	25.3	20.8
4	Nominal speed	rpm	3400	3480	3170	5060	4740	4430	4210
5	Nominal torque (max. continuous torque)	mNm	44.5	43.1	44	45.5	45.1	45.4	45
6	Nominal current (max. continuous current)	A	3.96	2.62	1.87	1.33	1.01	0.804	0.659
7	Stall torque	mNm	153	146	140	212	197	189	178
8	Starting current	A	13.2	8.57	5.77	6.02	4.27	3.24	2.54
9	Max. efficiency	%	80	81	81	84	83	83	83
	Characteristics								
10	Terminal resistance	Ω	0.454	1.05	2.08	3.99	7.02	11.1	16.6
11	Terminal inductance	mH	0.0601	0.13	0.264	0.556	0.954	1.52	2.22
12	Torque constant	mNm/A	11.6	17	24.3	35.2	46.1	58.2	70.4
13	Speed constant	rpm/V	825	562	394	271	207	164	136
14	Speed / torque gradient	rpm/mNm	32.4	34.8	33.8	30.8	31.6	31.3	31.9
15	Mechanical time constant	ms	15	14.9	14.7	14.6	14.6	14.6	14.7
16	Rotor inertia	gcm²	44.2	40.8	41.7	45.3	44.2	44.6	43.8

Specifications

	Thermal data	
17	Thermal resistance housing-ambient	7.5 K/W
18	Thermal resistance winding-housing	2.1 K/W
19	Thermal time constant winding	17.8 s
20	Thermal time constant motor	521 s
21	Ambient temperature	-20…+85°C
22	Max. permissible winding temperature	+125°C
	Mechanical data (ball bearings)	
23	Max. permissible speed	6000 rpm
24	Axial play	0.12 - 0.22 mm
25	Radial play	0.025 mm
26	Max. axial load (dynamic)	7.6 N
27	Max. force for press fits (static)	110 N
28	Max. radial loading, 5 mm from flange	32 N
	Mechanical data (sleeve bearings)	
23	Max. permissible speed	6000 rpm
24	Axial play	0.12 - 0.22 mm
25	Radial play	0.012 mm
26	Max. axial load (dynamic)	5 N
27	Max. force for press fits (static)	110 N
28	Max. radial loading, 5 mm from flange	10.5 N
	Other specifications	
29	Number of pole pairs	1
30	Number of commutator segments	13
31	Weight of motor	240 g

Values listed in the table are nominal.
Explanation of the figures on page 79.

Option
Sleeve bearings in place of ball bearings

Operating Range

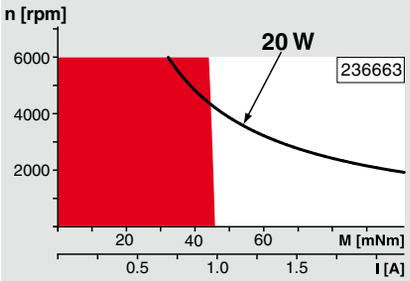

Comments

Continuous operation
In observation of above listed thermal resistance (lines 17 and 18) the maximum permissible winding temperature will be reached during continuous operation at 25°C ambient.
= Thermal limit.

Short term operation
The motor may be briefly overloaded (recurring).

Assigned power rating

maxon Modular System

Overview on page 20–25

Planetary Gearhead
∅32 mm
0.75 - 6.0 Nm
Page 272–277

Spur Gearhead
∅38 mm
0.1 - 0.6 Nm
Page 282

Spindle Drive
∅32 mm
Page 301–303

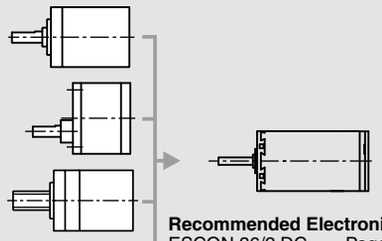

Recommended Electronics:

ESCON 36/2 DC	Page 342
ESCON Module 50/5	343
ESCON 50/5	344
ESCON 70/10	344
Notes	**22**

A-max 32 ∅32 mm, Graphite Brushes, 20 Watt

High Power

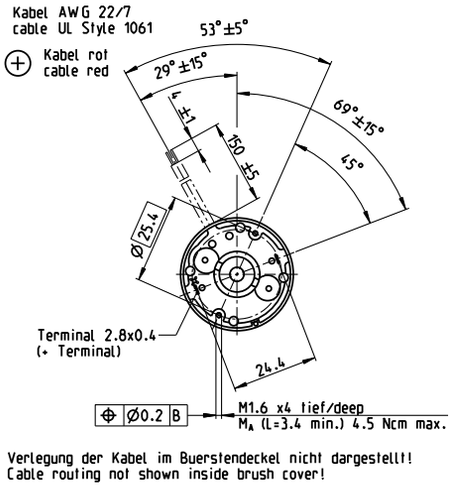

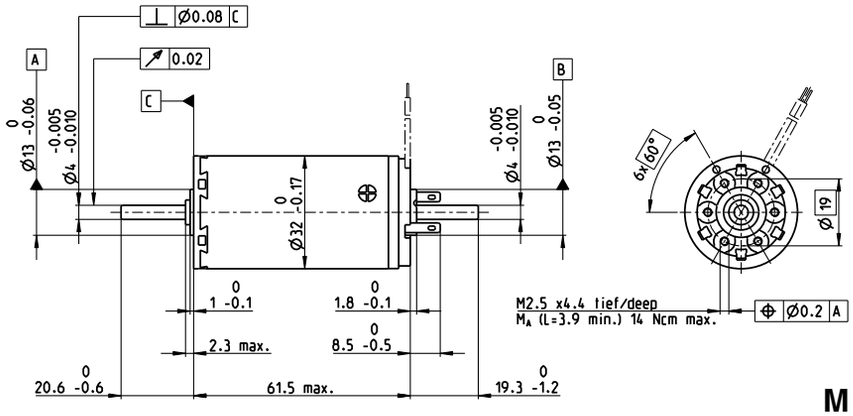

M 1:2

Stock program
Standard program
Special program (on request)

Part Numbers

with terminals	236666	236667	236668	236669	236670	236671	236672
with cables	353236	353237	301030	353239	353240	353241	353242

Motor Data

	Values at nominal voltage								
1	Nominal voltage	V	6	9	12	24	30	36	42
2	No load speed	rpm	4880	5000	4670	6460	6160	5860	5650
3	No load current	mA	123	84.2	58.2	42.8	32.3	25.3	20.8
4	Nominal speed	rpm	3400	3480	3170	5060	4740	4430	4210
5	Nominal torque (max. continuous torque)	mNm	44.5	43.1	44	45.5	45.1	45.4	45
6	Nominal current (max. continuous current)	A	3.96	2.62	1.87	1.33	1.01	0.804	0.659
7	Stall torque	mNm	153	146	140	212	197	189	178
8	Starting current	A	13.2	8.57	5.77	6.02	4.27	3.24	2.54
9	Max. efficiency	%	80	81	81	84	83	83	83
	Characteristics								
10	Terminal resistance	Ω	0.454	1.05	2.08	3.99	7.02	11.1	16.6
11	Terminal inductance	mH	0.0601	0.13	0.264	0.556	0.954	1.52	2.22
12	Torque constant	mNm/A	11.6	17	24.3	35.2	46.1	58.2	70.4
13	Speed constant	rpm/V	825	562	394	271	207	164	136
14	Speed / torque gradient	rpm/mNm	32.4	34.8	33.8	30.8	31.6	31.3	31.9
15	Mechanical time constant	ms	15	14.9	14.7	14.6	14.6	14.6	14.7
16	Rotor inertia	gcm²	44.2	40.8	41.7	45.3	44.2	44.6	43.8

Specifications

	Thermal data	
17	Thermal resistance housing-ambient	7.5 K/W
18	Thermal resistance winding-housing	2.1 K/W
19	Thermal time constant winding	17.8 s
20	Thermal time constant motor	521 s
21	Ambient temperature	-20…+85°C
22	Max. permissible winding temperature	+125°C
	Mechanical data (ball bearings)	
23	Max. permissible speed	6000 rpm
24	Axial play	0.12 - 0.22 mm
25	Radial play	0.025 mm
26	Max. axial load (dynamic)	7.6 N
27	Max. force for press fits (static)	110 N
	(static, shaft supported)	2000 N
28	Max. radial loading, 5 mm from flange	32 N
	Mechanical data (sleeve bearings)	
23	Max. permissible speed	6000 rpm
24	Axial play	0.12 - 0.22 mm
25	Radial play	0.012 mm
26	Max. axial load (dynamic)	5.0 N
27	Max. force for press fits (static)	110 N
	(static, shaft supported)	2000 N
28	Max. radial loading, 5 mm from flange	10.5 N
	Other specifications	
29	Number of pole pairs	1
30	Number of commutator segments	13
31	Weight of motor	240 g

Values listed in the table are nominal.
Explanation of the figures on page 79.

Option
Sleeve bearings in place of ball bearings

Operating Range

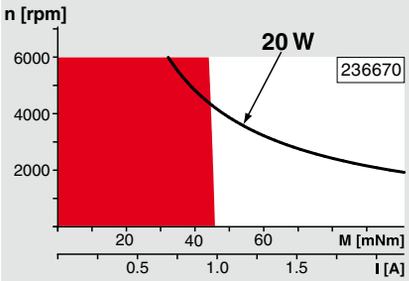

Comments

Continuous operation
In observation of above listed thermal resistance (lines 17 and 18) the maximum permissible winding temperature will be reached during continuous operation at 25°C ambient.
= Thermal limit.

Short term operation
The motor may be briefly overloaded (recurring).

Assigned power rating

maxon Modular System

Overview on page 20–25

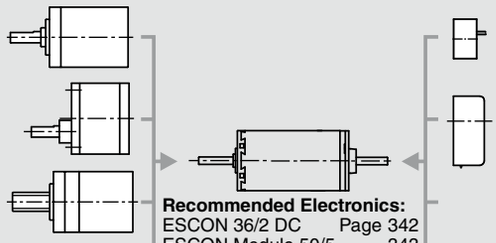

Planetary Gearhead
∅32 mm
0.75 - 6.0 Nm
Page 272–277

Spur Gearhead
∅38 mm
0.1 - 0.6 Nm
Page 282

Spindle Drive
∅32 mm
Page 301–303

Recommended Electronics:

ESCON 36/2 DC	Page 342
ESCON Module 50/5	343
ESCON 50/5	344
ESCON 70/10	344
EPOS2 24/2	350
EPOS2 Module 36/2	350
EPOS2 24/5, EPOS2 50/5	351
EPOS2 P 24/5	354
EPOS3 70/10 EtherCAT	357
MAXPOS 50/5	360
Notes	**22**

Encoder MR
256 - 1024 CPT,
3 channels
Page 320

Encoder HED_ 5540
500 CPT,
3 channels
Page 326/327

maxon RE-max

maxon RE-max

- High-performance at low cost
- Equipped with NdFeB magnets
- High and consistent quality thanks to mastery and monitoring of the processes
- Same part platform – compatible with the A-max
- Automated manufacturing process
- Open for customer-oriented modifications

Summary 146

DC motors 13–29 mm in diameter 147–166

maxon RE-max program

The high-power range DC motor, with top performance and convincing quality.

Same design as the innovative and award-winning A-max range. Consistent implementation of the same part platform.

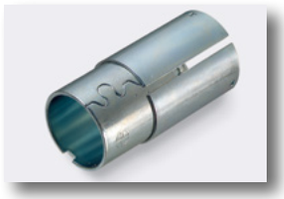

Motor housing made of steel laminate, minimizing waste. The strong field of the neodymium magnets is absorbed by an additional sleeve.

Hybrid process forms the stator by assembling motor housing, magnet and end cap in one step using injection molding of PPA plastic. Customers can select either sleeve or ball bearings.

Elimination of a C-Clip groove results in higher torsional stability and greater cross-sectional strength.

Reduced-diameter commutator, employing more segments. The newly developed CLL concept (Capacitor Long Life) significantly increases the service life of the RE-max motors.

High and consistent quality thanks to process monitoring and production on the most modern assembly lines.

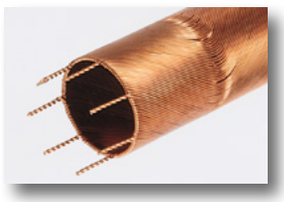

The “heart” of our motors is the ironless winding System maxon®. This means – physically dependent – advantages like an efficiency of up to 90%, the best regulating dynamics and small dimensions.

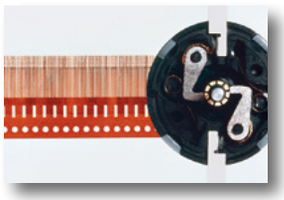

Graphite brushes for hard use with the highest peak loads. Precious metal brushes for fine rotational movements.

Modular construction of the RE-max series

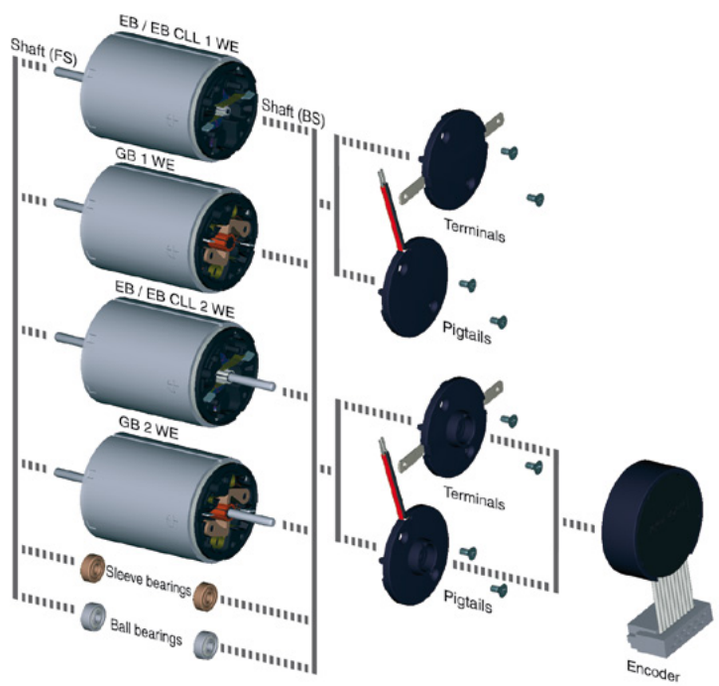

X = Standard X = Option	WE = Shaft end	RE-max 13 1 WE	RE-max 13 2 WE	RE-max 17 1 WE	RE-max 17 2 WE	RE-max 21 1 WE	RE-max 21 2 WE	RE-max 24 1 WE	RE-max 24 2 WE	RE-max 29 1 WE	RE-max 29 2 WE
Precious Metal Brushes (EB)		X	X	X	X	X	X	X	X	X	X
Precious Metal Brushes (EB) and CLL		X	X	X	X	X	X	X	X	X	X
Graphite Brushes (GB)				X	X	X	X	X	X	X	X
Sleeve Bearings		X	X	X	X	X	X	X	X	X	X
Ball Bearings				X	X	X	X	X	X	X	X
Terminals				X	X	X	X	X	X	X	X
Pigtails		X	X	X	X	X	X	X	X	X	X
Shaft flange side (FS)	min.	4.5	4.5	4.5	4.5	5.0	5.0	5.0	5.0	6.0	6.0
	max.	15.0	15.0	15.0	15.0	27.4	27.4	25.0	25.0	27.0	27.0
Shaft brush side (BS)	min.		2.6		2.6		2.6		2.6		2.6
	max.		10.0		10.0		16.6		16.0		16.0

RE-max 13 ∅13 mm, Precious Metal Brushes CLL, 1.2 Watt

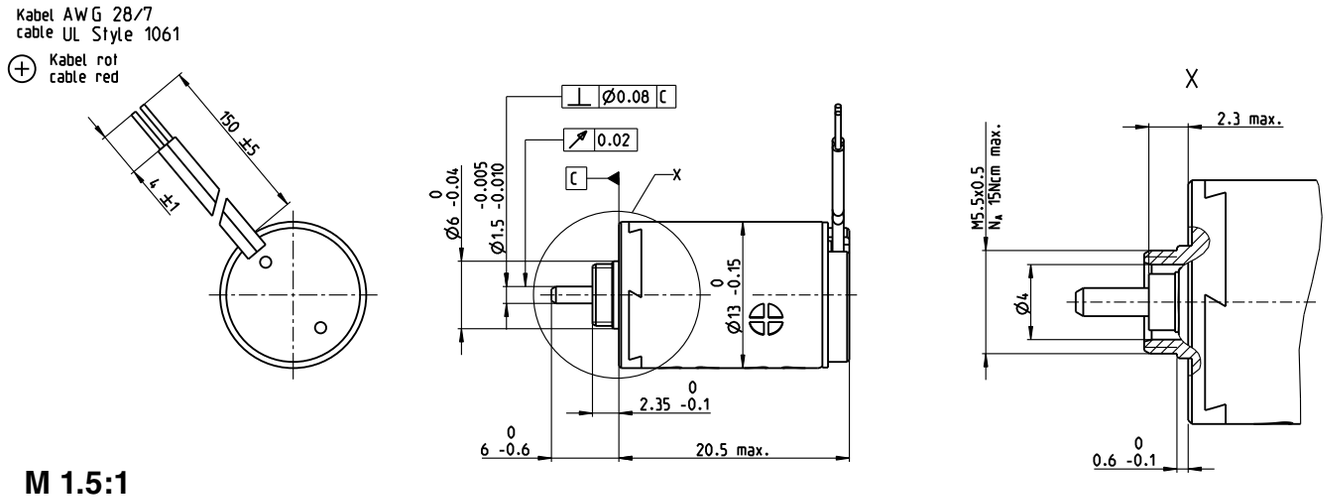

M 1.5:1

Stock program
Standard program
Special program (on request)

Part Numbers

			201352	203881	203882	203883	203884	203885	203886	203887	203888	203889	203890	203891	203892	203893	203894
Motor Data																	
	Values at nominal voltage																
1	Nominal voltage	V	1	1.2	1.5	1.8	2.4	3	3.6	4.2	5	6	8	9	10	12	15
2	No load speed	rpm	11700	11400	11200	11100	11400	11700	12200	11600	11400	11100	11800	10700	11200	11300	10800
3	No load current	mA	68	55	42.8	35.1	27.5	22.7	20.3	16.1	13.2	10.4	8.69	6.65	6.36	5.43	4.02
4	Nominal speed	rpm	10200	9350	8720	7950	7350	6920	7070	6300	6020	5670	6440	5250	5630	5860	5240
5	Nominal torque (max. continuous torque)	mNm	0.334	0.422	0.552	0.682	0.898	1.11	1.28	1.31	1.29	1.3	1.28	1.27	1.26	1.27	1.26
6	Nominal current (max. continuous current)	A	0.48	0.48	0.48	0.48	0.48	0.48	0.48	0.4	0.325	0.263	0.209	0.167	0.155	0.132	0.0997
7	Stall torque	mNm	2.36	2.14	2.33	2.32	2.47	2.7	3.02	2.87	2.74	2.68	2.83	2.51	2.56	2.64	2.47
8	Starting current	A	2.94	2.18	1.87	1.53	1.26	1.12	1.09	0.846	0.668	0.527	0.447	0.321	0.306	0.267	0.19
9	Max. efficiency	%	73	72	73	73	73	74	75	75	75	75	75	74	74	74	74
	Characteristics																
10	Terminal resistance	Ω	0.34	0.55	0.802	1.17	1.91	2.67	3.29	4.96	7.48	11.4	17.9	28.1	32.7	44.9	78.9
11	Terminal inductance	mH	0.0056	0.0083	0.0135	0.0199	0.0333	0.0501	0.0661	0.0993	0.145	0.223	0.346	0.532	0.607	0.847	1.47
12	Torque constant	mNm/A	0.802	0.98	1.25	1.51	1.96	2.41	2.76	3.39	4.1	5.08	6.33	7.84	8.38	9.89	13
13	Speed constant	rpm/V	11900	9740	7650	6300	4870	3970	3460	2820	2330	1880	1510	1220	1140	965	734
14	Speed / torque gradient	rpm/mNm	5050	5470	4920	4880	4740	4400	4110	4130	4250	4210	4270	4360	4450	4380	4450
15	Mechanical time constant	ms	19	16.7	15.4	14.8	14.3	14	13.7	13.6	13.6	13.6	13.6	13.7	13.7	13.6	13.7
16	Rotor inertia	gcm^2	0.358	0.291	0.299	0.29	0.288	0.303	0.318	0.315	0.306	0.308	0.304	0.3	0.293	0.297	0.294

Specifications

	Thermal data	
17	Thermal resistance housing-ambient	47.5 K/W
18	Thermal resistance winding-housing	14 K/W
19	Thermal time constant winding	5.11 s
20	Thermal time constant motor	186 s
21	Ambient temperature	-20…+65°C
22	Max. permissible winding temperature	+85°C
	Mechanical data (sleeve bearings)	
23	Max. permissible speed	19000 rpm
24	Axial play	0.05 - 0.15 mm
25	Radial play	0.014 mm
26	Max. axial load (dynamic)	0.8 N
27	Max. force for press fits (static)	35 N
28	Max. radial loading, 5 mm from flange	1.4 N
	Other specifications	
29	Number of pole pairs	1
30	Number of commutator segments	7
31	Weight of motor	15 g

CLL = Capacitor Long Life
Alignment of the electronic connections not specified

Values listed in the table are nominal.
Explanation of the figures on page 79.

Operating Range

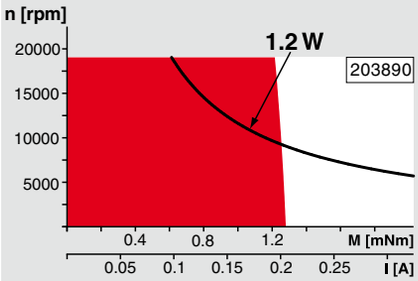

Comments

Continuous operation
In observation of above listed thermal resistance (lines 17 and 18) the maximum permissible winding temperature will be reached during continuous operation at 25°C ambient.
= Thermal limit.

Short term operation
The motor may be briefly overloaded (recurring).

Assigned power rating

maxon Modular System

Overview on page 20–25

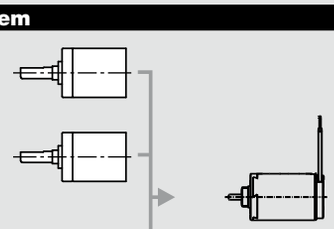

Planetary Gearhead
∅13 mm
0.05 - 0.15 Nm
Page 247

Planetary Gearhead
∅13 mm
0.2 - 0.35 Nm
Page 248

Recommended Electronics:

ESCON 36/2 DC	Page 342
ESCON Module 50/5	343
ESCON 50/5	344
Notes	**22**

RE-max 13 ∅13 mm, Precious Metal Brushes, 0.75 Watt

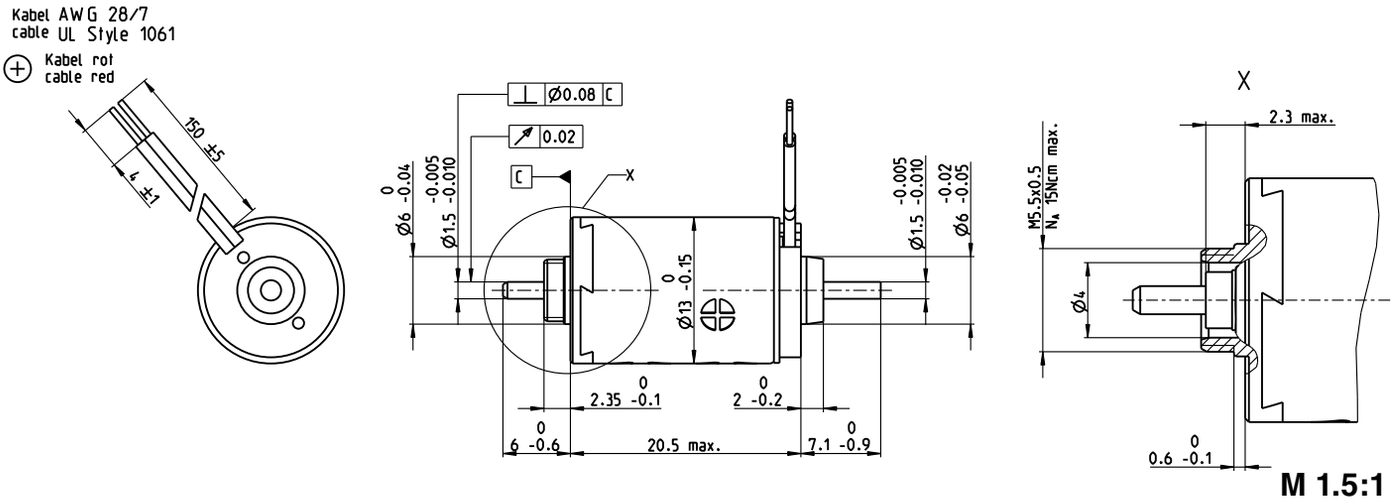

Stock program
Standard program
Special program (on request)

Part Numbers

Motor Data		268336	268337	268338	268339	268340	268341	268342	268343	268344	268345	268346	268347	268348	268349	268350
Values at nominal voltage																
1 Nominal voltage	V	0.6	0.72	0.9	1.2	1.5	1.8	1.8	2.4	3	3.6	4.8	6	6	7.2	10
2 No load speed	rpm	6870	6700	6600	7260	7010	6870	5980	6510	6720	6510	6970	7030	6560	6680	7050
3 No load current	mA	79	64	50	42.8	32.6	26.3	21.8	18.3	15.3	12.2	10.1	8.16	7.43	6.34	4.92
4 Nominal speed	rpm	5490	4680	4130	4160	2960	2150	849	1200	1340	1140	1580	1580	1050	1200	1550
5 Nominal torque (max. continuous torque)	mNm	0.327	0.415	0.545	0.674	0.892	1.11	1.28	1.32	1.3	1.3	1.29	1.27	1.26	1.27	1.26
6 Nominal current (max. continuous current)	A	0.48	0.48	0.48	0.48	0.48	0.48	0.48	0.402	0.327	0.264	0.211	0.168	0.156	0.133	0.1
7 Stall torque	mNm	1.41	1.28	1.4	1.55	1.54	1.62	1.51	1.64	1.64	1.61	1.7	1.68	1.54	1.59	1.65
8 Starting current	A	1.76	1.31	1.12	1.02	0.786	0.674	0.547	0.484	0.401	0.316	0.268	0.214	0.184	0.16	0.127
9 Max. efficiency	%	63	62	63	64	64	65	65	66	65	65	66	66	65	65	65
Characteristics																
10 Terminal resistance	Ω	0.34	0.55	0.802	1.17	1.91	2.67	3.29	4.96	7.48	11.4	17.9	28.1	32.7	44.9	78.9
11 Terminal inductance	mH	0.0056	0.0083	0.0135	0.0199	0.0333	0.0501	0.0661	0.0993	0.145	0.223	0.346	0.532	0.607	0.847	1.47
12 Torque constant	mNm/A	0.802	0.98	1.25	1.51	1.96	2.41	2.76	3.39	4.1	5.08	6.33	7.84	8.38	9.89	13
13 Speed constant	rpm/V	11900	9740	7650	6300	4870	3970	3460	2820	2330	1880	1510	1220	1140	965	734
14 Speed / torque gradient	rpm/mNm	5050	5470	4920	4880	4740	4400	4110	4130	4250	4210	4270	4360	4450	4380	4450
15 Mechanical time constant	ms	19.2	17	15.7	15.1	14.6	14.2	13.9	13.9	13.9	13.8	13.8	13.9	13.9	13.9	13.9
16 Rotor inertia	gcm²	0.363	0.296	0.304	0.295	0.293	0.308	0.323	0.32	0.311	0.313	0.309	0.305	0.298	0.302	0.299

Specifications

Thermal data	
17 Thermal resistance housing-ambient	47.5 K/W
18 Thermal resistance winding-housing	14 K/W
19 Thermal time constant winding	5.11 s
20 Thermal time constant motor	186 s
21 Ambient temperature	-20…+65°C
22 Max. permissible winding temperature	+85°C
Mechanical data (sleeve bearings)	
23 Max. permissible speed	11000 rpm
24 Axial play	0.05 - 0.15 mm
25 Radial play	0.014 mm
26 Max. axial load (dynamic)	0.8 N
27 Max. force for press fits (static)	35 N
(static, shaft supported)	240 N
28 Max. radial loading, 5 mm from flange	1.4 N
Other specifications	
29 Number of pole pairs	1
30 Number of commutator segments	7
31 Weight of motor	15 g

Alignment of the electronic connections not specified

Values listed in the table are nominal.
Explanation of the figures on page 79.

Operating Range

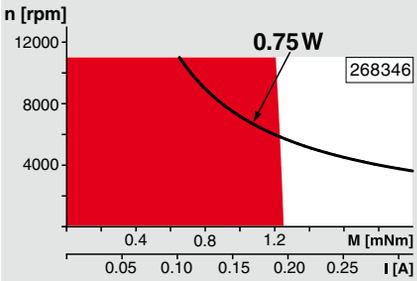

Comments

Continuous operation
In observation of above listed thermal resistance (lines 17 and 18) the maximum permissible winding temperature will be reached during continuous operation at 25°C ambient.
= Thermal limit.

Short term operation
The motor may be briefly overloaded (recurring).

Assigned power rating

maxon Modular System

Overview on page 20–25

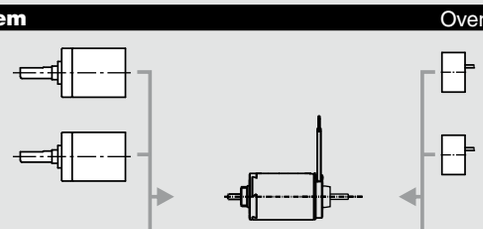

Planetary Gearhead
∅13 mm
0.05 - 0.15 Nm
Page 247

Planetary Gearhead
∅13 mm
0.2 - 0.35 Nm
Page 248

Encoder MR
16 CPT,
2 channels
Page 312

Encoder MR
64 - 256 CPT,
2 channels
Page 313/314

Recommended Electronics:

ESCON 36/2 DC	Page 342
ESCON Module 50/5	343
ESCON 50/5	344
EPOS2 24/2	350
EPOS2 Module 36/2	350
EPOS3 70/10 EtherCAT	357
MAXPOS 50/5	360
Notes	**22**

RE-max 13 ∅13 mm, Precious Metal Brushes CLL, 2.5 Watt

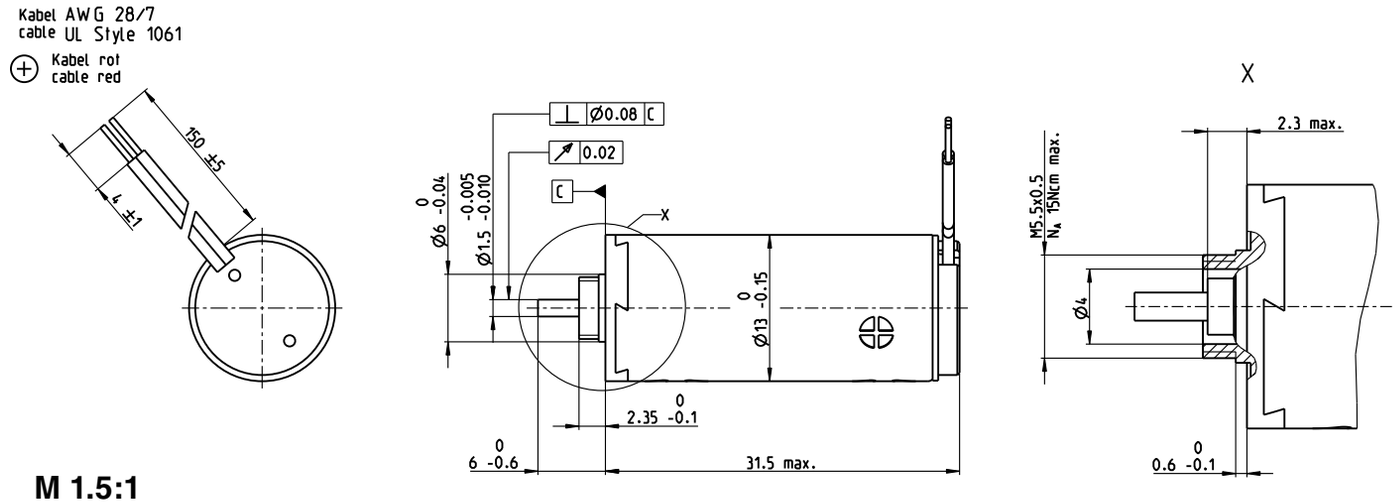

M 1.5:1

Stock program
Standard program
Special program (on request)

Part Numbers

			201353	203937	203938	203939	203940	203941	203942	203943	203944	203945	203946	203947	203948	203949	203950
Motor Data																	
	Values at nominal voltage																
1	Nominal voltage	V	2.4	3	3	3.6	4.8	4.8	6	7.2	8	10	12	15	15	18	24
2	No load speed	rpm	10600	12300	10800	10900	11500	10200	11500	11500	10900	11500	11100	11200	10400	10600	11600
3	No load current	mA	30.6	31.5	25.1	21.3	17.5	14.3	14	11.7	9.67	8.4	6.62	5.35	4.72	4.11	3.55
4	Nominal speed	rpm	9550	11000	9180	8940	9050	7440	8320	7980	7570	8050	7660	7750	6900	7210	8080
5	Nominal torque (max. continuous torque)	mNm	0.969	1.04	1.21	1.45	1.84	2.09	2.32	2.67	2.78	2.72	2.71	2.72	2.7	2.72	2.66
6	Nominal current (max. continuous current)	A	0.48	0.48	0.48	0.48	0.48	0.48	0.48	0.459	0.409	0.336	0.27	0.218	0.201	0.173	0.138
7	Stall torque	mNm	8.91	9.4	7.84	7.9	8.56	7.61	8.35	8.72	9	9.08	8.73	8.86	8.1	8.42	8.85
8	Starting current	A	4.15	4.06	2.97	2.52	2.16	1.71	1.69	1.47	1.3	1.1	0.852	0.697	0.591	0.526	0.45
9	Max. efficiency	%	84	84	83	83	83	83	83	83	84	84	84	84	83	84	84
	Characteristics																
10	Terminal resistance	Ω	0.578	0.738	1.01	1.43	2.22	2.81	3.56	4.91	6.16	9.09	14.1	21.5	25.4	34.3	53.3
11	Terminal inductance	mH	0.0157	0.0182	0.0237	0.0334	0.0534	0.0675	0.0834	0.12	0.163	0.232	0.356	0.549	0.638	0.872	1.31
12	Torque constant	mNm/A	2.15	2.31	2.64	3.14	3.96	4.46	4.95	5.94	6.94	8.26	10.2	12.7	13.7	16	19.6
13	Speed constant	rpm/V	4450	4130	3610	3040	2410	2140	1930	1610	1380	1160	933	751	697	596	486
14	Speed / torque gradient	rpm/mNm	1200	1320	1380	1390	1350	1350	1380	1330	1220	1270	1280	1270	1290	1270	1320
15	Mechanical time constant	ms	8.55	8.23	7.94	7.71	7.5	7.44	7.42	7.33	7.25	7.26	7.26	7.24	7.25	7.25	7.3
16	Rotor inertia	gcm^2	0.681	0.596	0.548	0.53	0.53	0.526	0.512	0.528	0.565	0.545	0.541	0.544	0.536	0.543	0.529

Specifications

	Thermal data	
17	Thermal resistance housing-ambient	37 K/W
18	Thermal resistance winding-housing	10 K/W
19	Thermal time constant winding	6.97 s
20	Thermal time constant motor	277 s
21	Ambient temperature	-20…+65°C
22	Max. permissible winding temperature	+85°C
	Mechanical data (sleeve bearings)	
23	Max. permissible speed	19000 rpm
24	Axial play	0.05 - 0.15 mm
25	Radial play	0.014 mm
26	Max. axial load (dynamic)	0.8 N
27	Max. force for press fits (static)	35 N
28	Max. radial loading, 5 mm from flange	1.4 N
	Other specifications	
29	Number of pole pairs	1
30	Number of commutator segments	7
31	Weight of motor	24 g

CLL = Capacitor Long Life
Alignment of the electronic connections not specified

Values listed in the table are nominal.
Explanation of the figures on page 79.

Operating Range

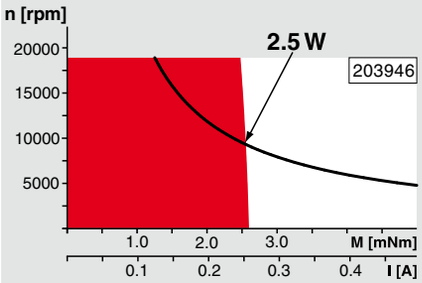

Comments

Continuous operation
In observation of above listed thermal resistance (lines 17 and 18) the maximum permissible winding temperature will be reached during continuous operation at 25°C ambient.
= Thermal limit.

Short term operation
The motor may be briefly overloaded (recurring).

Assigned power rating

maxon Modular System

Overview on page 20–25

Planetary Gearhead
∅13 mm
0.05 - 0.15 Nm
Page 247

Planetary Gearhead
∅13 mm
0.2 - 0.35 Nm
Page 248

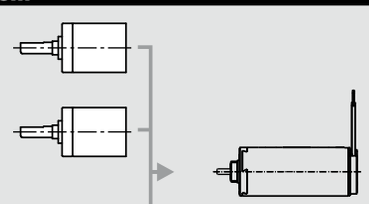

Recommended Electronics:

ESCON 36/2 DC	Page 342
ESCON Module 50/5	343
ESCON 50/5	344
Notes	**22**

RE-max 13 ∅13 mm, Precious Metal Brushes CLL, 2 Watt

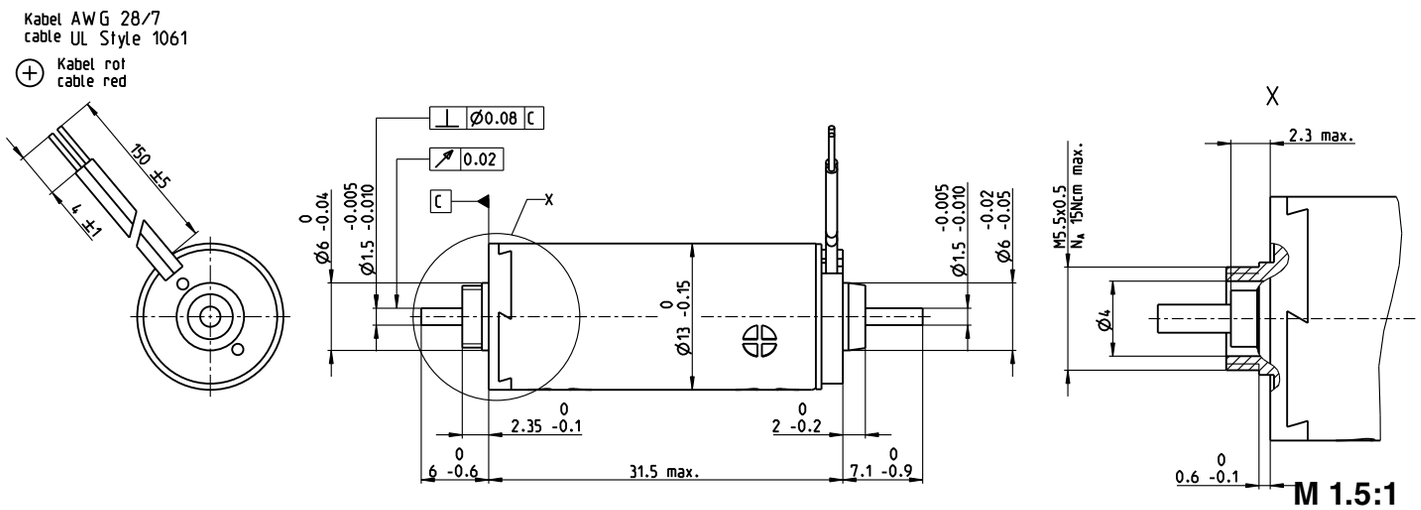

Stock program
Standard program
Special program (on request)

Part Numbers

			268351	268353	268355	268356	268357	268358	268359	268360	268361	268362	268363	268364	268365	268366	268367
Motor Data																	
	Values at nominal voltage																
1	Nominal voltage	V	1.5	1.5	1.8	2.4	3	3	3.6	4.2	4.8	6	7.2	9	10	12	15
2	No load speed	rpm	6570	6080	6380	7180	7100	6300	6810	6620	6500	6820	6600	6640	6840	7030	7160
3	No load current	mA	43.8	39.8	35.3	30.8	24.3	20.9	19.2	15.9	13.5	11.5	9.2	7.42	6.95	5.99	4.91
4	Nominal speed	rpm	5550	4830	4840	5290	4720	3590	3690	3150	3160	3420	3180	3230	3420	3630	3700
5	Nominal torque (max. continuous torque)	mNm	0.941	1.02	1.18	1.42	1.82	2.06	2.3	2.66	2.76	2.7	2.69	2.7	2.68	2.69	2.64
6	Nominal current (max. continuous current)	A	0.48	0.48	0.48	0.48	0.48	0.48	0.48	0.46	0.41	0.337	0.271	0.219	0.201	0.173	0.139
7	Stall torque	mNm	5.57	4.7	4.71	5.26	5.35	4.76	5.01	5.09	5.4	5.45	5.24	5.32	5.4	5.61	5.53
8	Starting current	A	2.59	2.03	1.78	1.68	1.35	1.07	1.01	0.856	0.779	0.66	0.511	0.418	0.394	0.35	0.281
9	Max. efficiency	%	76	74	74	75	75	74	75	75	76	76	75	75	76	76	76
	Characteristics																
10	Terminal resistance	Ω	0.578	0.738	1.01	1.43	2.22	2.81	3.56	4.91	6.16	9.09	14.1	21.5	25.4	34.3	53.3
11	Terminal inductance	mH	0.0157	0.0182	0.0237	0.0334	0.0534	0.0675	0.0834	0.12	0.163	0.232	0.356	0.549	0.638	0.872	1.31
12	Torque constant	mNm/A	2.15	2.31	2.64	3.14	3.96	4.46	4.95	5.94	6.94	8.26	10.2	12.7	13.7	16	19.6
13	Speed constant	rpm/V	4450	4130	3610	3040	2410	2140	1930	1610	1380	1160	933	751	697	596	486
14	Speed / torque gradient	rpm/mNm	1200	1320	1380	1390	1350	1350	1380	1330	1220	1270	1280	1270	1290	1270	1320
15	Mechanical time constant	ms	8.61	8.3	8.01	7.78	7.57	7.51	7.49	7.4	7.31	7.33	7.33	7.31	7.31	7.32	7.37
16	Rotor inertia	gcm²	0.686	0.601	0.553	0.535	0.535	0.531	0.517	0.533	0.57	0.55	0.546	0.549	0.541	0.548	0.534

Specifications

	Thermal data	
17	Thermal resistance housing-ambient	37 K/W
18	Thermal resistance winding-housing	10 K/W
19	Thermal time constant winding	6.97 s
20	Thermal time constant motor	277 s
21	Ambient temperature	-20…+65°C
22	Max. permissible winding temperature	+85°C
	Mechanical data (sleeve bearings)	
23	Max. permissible speed	11000 rpm
24	Axial play	0.05 - 0.15 mm
25	Radial play	0.014 mm
26	Max. axial load (dynamic)	0.8 N
27	Max. force for press fits (static)	35 N
	(static, shaft supported)	140 N
28	Max. radial loading, 5 mm from flange	1.4 N
	Other specifications	
29	Number of pole pairs	1
30	Number of commutator segments	7
31	Weight of motor	24 g

CLL = Capacitor Long Life
Alignment of the electronic connections not specified

Values listed in the table are nominal.
Explanation of the figures on page 79.

Operating Range

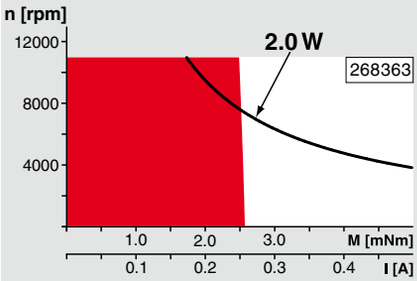

Comments

Continuous operation
In observation of above listed thermal resistance (lines 17 and 18) the maximum permissible winding temperature will be reached during continuous operation at 25°C ambient.
= Thermal limit.

Short term operation
The motor may be briefly overloaded (recurring).

Assigned power rating

maxon Modular System

Overview on page 20–25

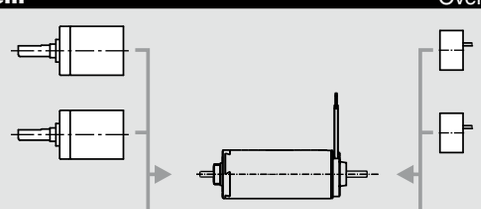

Planetary Gearhead
∅13 mm
0.05 - 0.15 Nm
Page 247

Planetary Gearhead
∅13 mm
0.2 - 0.35 Nm
Page 248

Encoder MR
16 CPT,
2 channels
Page 312

Encoder MR
64 - 256 CPT,
2 channels
Page 313/314

Recommended Electronics:

ESCON 36/2 DC	Page 342
ESCON Module 50/5	343
ESCON 50/5	344
EPOS2 24/2	350
EPOS2 Module 36/2	350
EPOS3 70/10 EtherCAT	357
MAXPOS 50/5	360
Notes	**22**

RE-max 17 ∅17 mm, Precious Metal Brushes CLL, 4 Watt

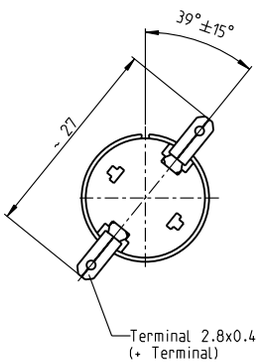

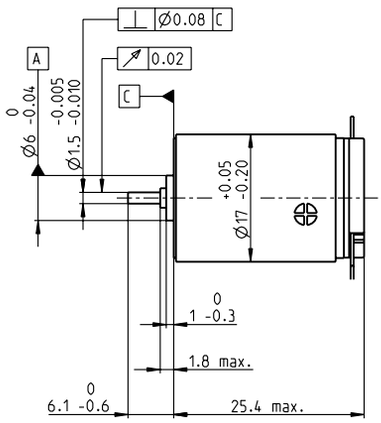

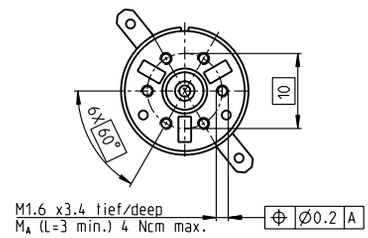

M 1:1

- Stock program
- Standard program
- Special program (on request)

Part Numbers

			214895	214896	214897	214898	214899	215982	215983	215985	215986	215987
Motor Data												
	Values at nominal voltage											
1	Nominal voltage	V	3	4.5	12	15	21	24	24	30	36	48
2	No load speed	rpm	11300	9650	10600	10700	11300	11000	9830	10200	10900	9560
3	No load current	mA	40.7	21	9.2	7.5	5.81	4.91	4.06	3.47	3.2	1.94
4	Nominal speed	rpm	10500	7810	8110	8210	8740	8520	7280	7680	8290	6890
5	Nominal torque (max. continuous torque)	mNm	1.42	2.57	3.67	3.64	3.61	3.63	3.62	3.59	3.53	3.47
6	Nominal current (max. continuous current)	A	0.6	0.6	0.35	0.281	0.209	0.18	0.16	0.132	0.115	0.0744
7	Stall torque	mNm	18.5	13.1	15.5	15.5	16.1	15.9	14	14.4	14.8	12.5
8	Starting current	A	7.32	2.95	1.45	1.17	0.91	0.772	0.604	0.518	0.473	0.262
9	Max. efficiency	%	86	84	85	85	85	85	85	85	85	84
	Characteristics											
10	Terminal resistance	Ω	0.41	1.52	8.3	12.8	23.1	31.1	39.7	57.9	76.2	183
11	Terminal inductance	mH	0.0114	0.0349	0.206	0.314	0.558	0.759	0.956	1.38	1.75	4.04
12	Torque constant	mNm/A	2.53	4.42	10.7	13.3	17.7	20.6	23.2	27.8	31.4	47.6
13	Speed constant	rpm/V	3780	2160	889	720	540	463	412	344	304	201
14	Speed / torque gradient	rpm/mNm	613	744	687	696	705	698	707	716	739	773
15	Mechanical time constant	ms	6.81	6.4	6.25	6.26	6.27	6.28	6.31	6.29	6.31	6.42
16	Rotor inertia	gcm²	1.06	0.82	0.868	0.859	0.849	0.859	0.852	0.838	0.816	0.793

Specifications

	Thermal data	
17	Thermal resistance housing-ambient	35 K/W
18	Thermal resistance winding-housing	12 K/W
19	Thermal time constant winding	7.75 s
20	Thermal time constant motor	343 s
21	Ambient temperature	-30…+65°C
22	Max. permissible winding temperature	+85°C
	Mechanical data (sleeve bearings)	
23	Max. permissible speed	19000 rpm
24	Axial play	0.05 - 0.15 mm
25	Radial play	0.012 mm
26	Max. axial load (dynamic)	0.8 N
27	Max. force for press fits (static)	35 N
28	Max. radial loading, 5 mm from flange	1.4 N
	Mechanical data (ball bearings)	
23	Max. permissible speed	19000 rpm
24	Axial play	0.05 - 0.15 mm
25	Radial play	0.025 mm
26	Max. axial load (dynamic)	2.2 N
27	Max. force for press fits (static)	30 N
28	Max. radial loading, 5 mm from flange	7.8 N
	Other specifications	
29	Number of pole pairs	1
30	Number of commutator segments	7
31	Weight of motor	26 g

CLL = Capacitor Long Life

Values listed in the table are nominal.
Explanation of the figures on page 79.

Option
Ball bearings in place of sleeve bearings
Pigtails in place of terminals
Without CLL

Operating Range

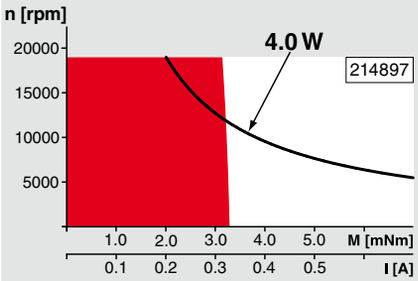

Comments

Continuous operation
In observation of above listed thermal resistance (lines 17 and 18) the maximum permissible winding temperature will be reached during continuous operation at 25°C ambient.
= Thermal limit.

Short term operation
The motor may be briefly overloaded (recurring).

Assigned power rating

maxon Modular System

Overview on page 20–25

Planetary Gearhead
∅16 mm
0.1 - 0.3 Nm
Page 254

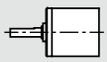

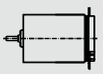

Recommended Electronics:

ESCON 36/2 DC	Page 342
ESCON Module 50/5	343
ESCON 50/5	344
Notes	**22**

RE-max 17 ∅17 mm, Precious Metal Brushes CLL, 2.5 Watt

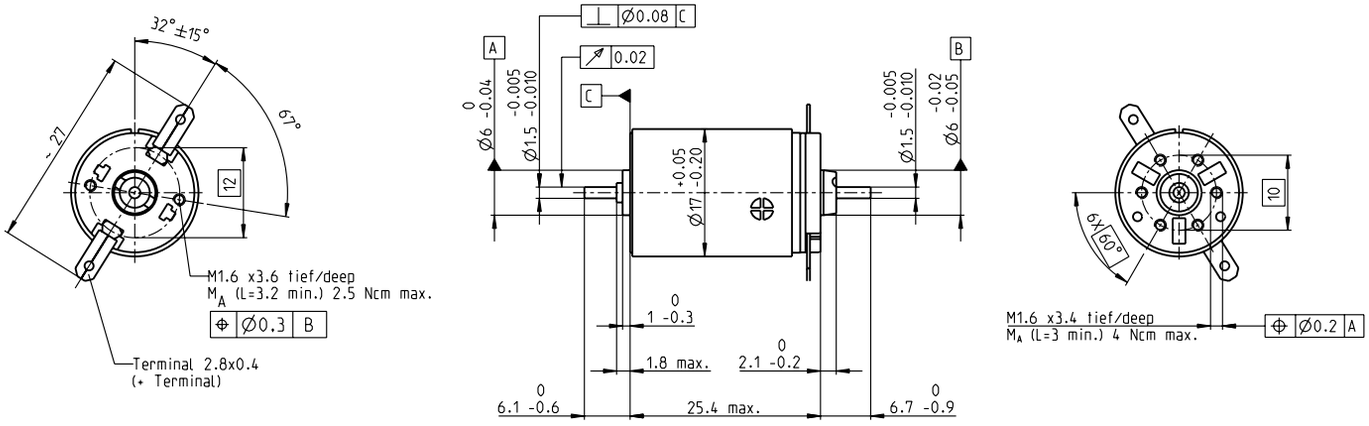

M 1:1

Stock program
Standard program
Special program (on request)

Part Numbers

			215988	215989	215990	215991	215992	215993	215994	215995	215996	215997
Motor Data												
	Values at nominal voltage											
1	Nominal voltage	V	2	3	7.2	9	12	15	18	21	24	36
2	No load speed	rpm	7500	6410	6330	6410	6410	6870	7350	7140	7230	7140
3	No load current	mA	42.9	23.3	9.56	7.77	5.83	5.1	4.64	3.83	3.41	2.24
4	Nominal speed	rpm	6740	4570	3820	3880	3860	4340	4800	4580	4630	4480
5	Nominal torque (max. continuous torque)	mNm	1.41	2.56	3.69	3.66	3.63	3.64	3.61	3.59	3.53	3.45
6	Nominal current (max. continuous current)	A	0.6	0.6	0.352	0.283	0.211	0.181	0.16	0.133	0.116	0.0745
7	Stall torque	mNm	12.3	8.71	9.32	9.31	9.19	9.95	10.5	10.1	9.88	9.34
8	Starting current	A	4.88	1.97	0.868	0.702	0.52	0.482	0.453	0.362	0.315	0.196
9	Max. efficiency	%	82	80	80	80	80	81	81	81	81	80
	Characteristics											
10	Terminal resistance	Ω	0.41	1.52	8.3	12.8	23.1	31.1	39.7	57.9	76.2	183
11	Terminal inductance	mH	0.0114	0.0348	0.205	0.313	0.557	0.758	0.955	1.37	1.75	4.03
12	Torque constant	mNm/A	2.53	4.42	10.7	13.3	17.7	20.6	23.2	27.8	31.4	47.6
13	Speed constant	rpm/V	3780	2160	889	720	540	463	412	344	304	201
14	Speed / torque gradient	rpm/mNm	613	744	687	696	705	698	707	716	739	773
15	Mechanical time constant	ms	6.8	6.38	6.23	6.25	6.25	6.26	6.29	6.27	6.3	6.4
16	Rotor inertia	gcm²	1.06	0.818	0.866	0.857	0.847	0.857	0.85	0.836	0.814	0.791

Specifications

	Thermal data	
17	Thermal resistance housing-ambient	35 K/W
18	Thermal resistance winding-housing	12 K/W
19	Thermal time constant winding	9.65 s
20	Thermal time constant motor	343 s
21	Ambient temperature	-30…+65°C
22	Max. permissible winding temperature	+85°C
	Mechanical data (sleeve bearings)	
23	Max. permissible speed	12000 rpm
24	Axial play	0.05 - 0.15 mm
25	Radial play	0.012 mm
26	Max. axial load (dynamic)	0.8 N
27	Max. force for press fits (static)	35 N
	(static, shaft supported)	200 N
28	Max. radial loading, 5 mm from flange	1.4 N
	Mechanical data (ball bearings)	
23	Max. permissible speed	12000 rpm
24	Axial play	0.05 - 0.15 mm
25	Radial play	0.025 mm
26	Max. axial load (dynamic)	2.2 N
27	Max. force for press fits (static)	30 N
	(static, shaft supported)	280 N
28	Max. radial loading, 5 mm from flange	7.8 N
	Other specifications	
29	Number of pole pairs	1
30	Number of commutator segments	7
31	Weight of motor	27 g

CLL = Capacitor Long Life

Values listed in the table are nominal.
Explanation of the figures on page 79.

Option
Ball bearings in place of sleeve bearings
Pigtails in place of terminals
Without CLL

Operating Range

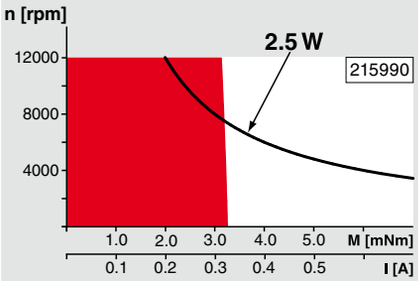

Comments

Continuous operation
In observation of above listed thermal resistance (lines 17 and 18) the maximum permissible winding temperature will be reached during continuous operation at 25°C ambient.
= Thermal limit.

Short term operation
The motor may be briefly overloaded (recurring).

Assigned power rating

maxon Modular System

Overview on page 20–25

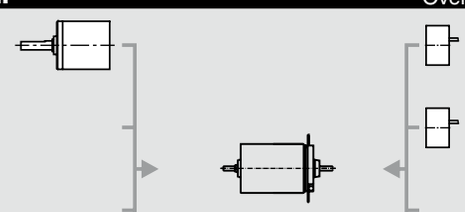

Planetary Gearhead
∅16 mm
0.1 - 0.3 Nm
Page 254

Encoder MR
32 CPT,
2 / 3 channels
Page 316

Encoder MR
128 / 256 / 512 CPT,
2 / 3 channels
Page 317

Recommended Electronics:

ESCON 36/2 DC	Page 342
ESCON Module 50/5	343
ESCON 50/5	344
EPOS2 24/2	350
EPOS2 Module 36/2	350
EPOS3 70/10 EtherCAT	357
MAXPOS 50/5	360
Notes	**22**

RE-max 17 ∅17 mm, Graphite Brushes, 4.5 Watt

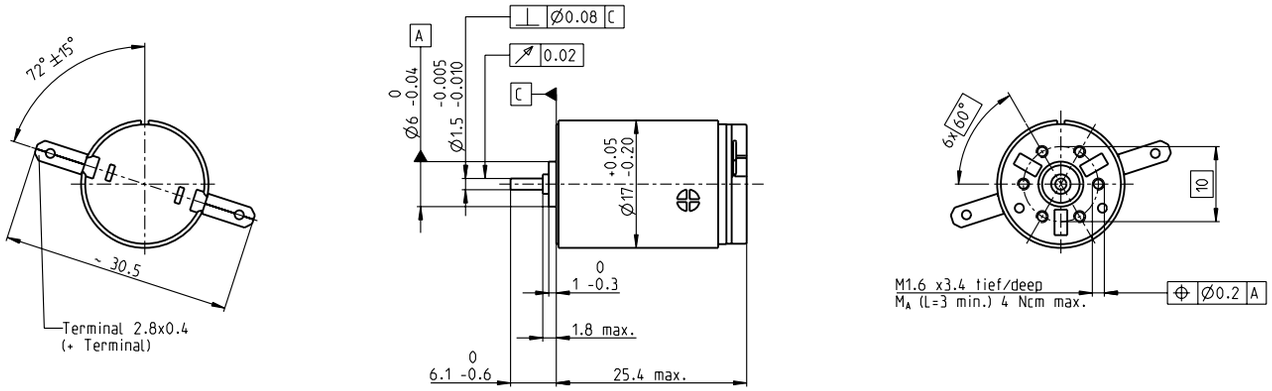

M 1:1

Stock program
Standard program
Special program (on request)

Part Numbers

			215998	215999	269569	216000	216001	216002	216003	216004	216005	216006	216007
Motor Data													
	Values at nominal voltage												
1	Nominal voltage	V	3	4.8	9	12	15	21	24	24	30	36	48
2	No load speed	rpm	11100	10100	10500	10400	10500	11100	10800	9630	10000	10700	9350
3	No load current	mA	152	85.2	47.4	35.3	28.6	21.7	18.5	16.1	13.5	12.1	7.82
4	Nominal speed	rpm	10300	8070	7730	7650	7760	8290	8070	6800	7200	7820	6390
5	Nominal torque (max. continuous torque)	mNm	1.44	2.82	4.06	4.06	4.02	3.97	4	4.02	3.98	3.88	3.85
6	Nominal current (max. continuous current)	A	0.72	0.72	0.553	0.412	0.33	0.245	0.211	0.189	0.156	0.135	0.0883
7	Stall torque	mNm	20.7	14.3	15.8	15.6	15.6	16.1	15.9	14	14.4	14.8	12.5
8	Starting current	A	8.19	3.24	1.97	1.45	1.17	0.911	0.773	0.605	0.518	0.473	0.262
9	Max. efficiency	%	75	70	72	72	71	72	72	70	71	71	69
	Characteristics												
10	Terminal resistance	Ω	0.366	1.48	4.57	8.25	12.8	23	31.1	39.7	57.9	76.1	183
11	Terminal inductance	mH	0.0114	0.0348	0.114	0.205	0.313	0.557	0.758	0.955	1.37	1.75	4.03
12	Torque constant	mNm/A	2.53	4.42	8	10.7	13.3	17.7	20.6	23.2	27.8	31.4	47.6
13	Speed constant	rpm/V	3780	2160	1190	889	720	540	463	412	344	304	201
14	Speed / torque gradient	rpm/mNm	548	723	681	683	694	703	697	706	716	739	773
15	Mechanical time constant	ms	6.08	6.21	6.2	6.22	6.24	6.26	6.27	6.3	6.28	6.31	6.42
16	Rotor inertia	gcm²	1.06	0.82	0.869	0.868	0.859	0.849	0.859	0.852	0.838	0.816	0.793

Specifications

	Thermal data	
17	Thermal resistance housing-ambient	35 K/W
18	Thermal resistance winding-housing	12 K/W
19	Thermal time constant winding	7.75 s
20	Thermal time constant motor	343 s
21	Ambient temperature	-30…+85°C
22	Max. permissible winding temperature	+125°C
	Mechanical data (sleeve bearings)	
23	Max. permissible speed	11900 rpm
24	Axial play	0.05 - 0.15 mm
25	Radial play	0.012 mm
26	Max. axial load (dynamic)	0.8 N
27	Max. force for press fits (static)	35 N
28	Max. radial loading, 5 mm from flange	1.4 N
	Mechanical data (ball bearings)	
23	Max. permissible speed	11900 rpm
24	Axial play	0.05 - 0.15 mm
25	Radial play	0.025 mm
26	Max. axial load (dynamic)	2.2 N
27	Max. force for press fits (static)	30 N
28	Max. radial loading, 5 mm from flange	7.8 N
	Other specifications	
29	Number of pole pairs	1
30	Number of commutator segments	7
31	Weight of motor	26 g

Values listed in the table are nominal.
Explanation of the figures on page 79.

Option
Ball bearings in place of sleeve bearings
Pigtails in place of terminals

Operating Range

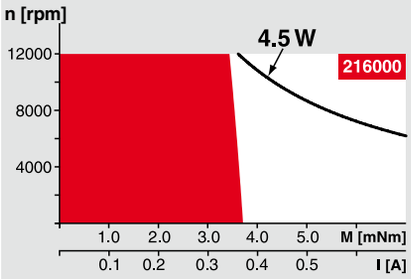

Comments

Continuous operation
In observation of above listed thermal resistance (lines 17 and 18) the maximum permissible winding temperature will be reached during continuous operation at 25°C ambient.
= Thermal limit.

Short term operation
The motor may be briefly overloaded (recurring).

Assigned power rating

maxon Modular System

Overview on page 20–25

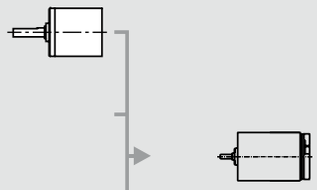

Planetary Gearhead
∅16 mm
0.1 - 0.3 Nm
Page 254

Recommended Electronics:

ESCON 36/2 DC	Page 342
ESCON Module 50/5	343
ESCON 50/5	344
Notes	**22**

RE-max 17 ∅17 mm, Graphite Brushes, 4.5 Watt

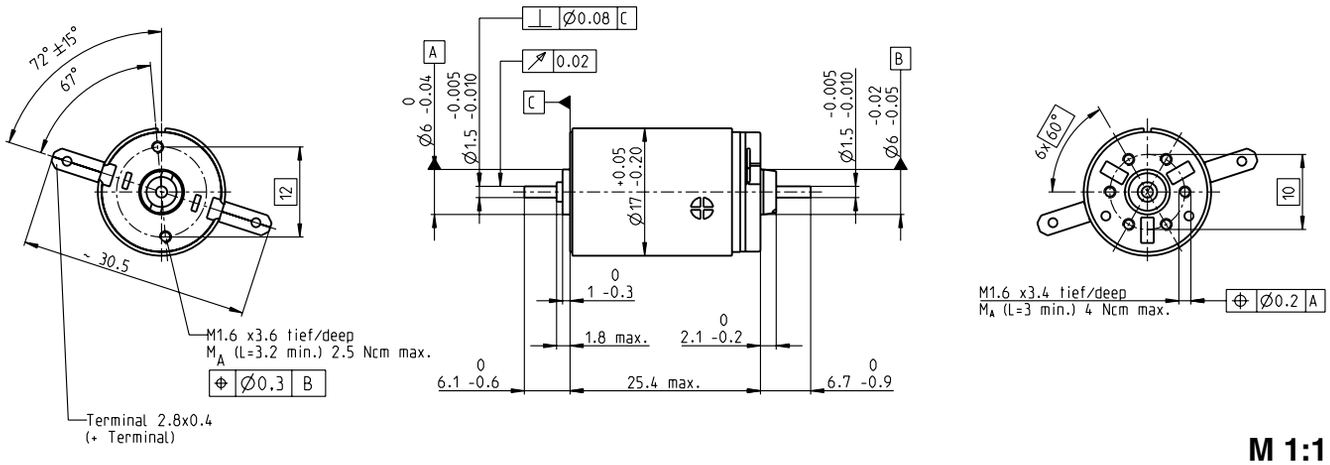

M 1:1

Stock program
Standard program
Special program (on request)

Part Numbers

			216008	216009	269571	216010	216011	216012	216013	216014	216015	216016	216017
Motor Data													
	Values at nominal voltage												
1	Nominal voltage	V	3	4.8	9	12	15	21	24	24	30	36	48
2	No load speed	rpm	11100	10100	10500	10400	10500	11100	10800	9630	10000	10700	9350
3	No load current	mA	152	85.2	47.4	35.3	28.6	21.7	18.5	16.1	13.5	12.1	7.82
4	Nominal speed	rpm	10300	8070	7730	7650	7760	8290	8070	6800	7200	7820	6390
5	Nominal torque (max. continuous torque)	mNm	1.44	2.82	4.06	4.06	4.02	3.97	4	4.02	3.98	3.88	3.85
6	Nominal current (max. continuous current)	A	0.72	0.72	0.553	0.412	0.33	0.245	0.211	0.189	0.156	0.135	0.0883
7	Stall torque	mNm	20.7	14.3	15.8	15.6	15.6	16.1	15.9	14	14.4	14.8	12.5
8	Starting current	A	8.19	3.24	1.97	1.45	1.17	0.911	0.773	0.605	0.518	0.473	0.262
9	Max. efficiency	%	75	70	72	72	71	72	72	70	71	71	69
	Characteristics												
10	Terminal resistance	Ω	0.366	1.48	4.57	8.25	12.8	23	31.1	39.7	57.9	76.1	183
11	Terminal inductance	mH	0.0114	0.0348	0.114	0.205	0.313	0.557	0.758	0.955	1.37	1.75	4.03
12	Torque constant	mNm/A	2.53	4.42	8	10.7	13.3	17.7	20.6	23.2	27.8	31.4	47.6
13	Speed constant	rpm/V	3780	2160	1190	889	720	540	463	412	344	304	201
14	Speed / torque gradient	rpm/mNm	548	723	681	683	694	703	697	706	716	739	773
15	Mechanical time constant	ms	6.08	6.21	6.2	6.22	6.24	6.26	6.27	6.3	6.28	6.31	6.42
16	Rotor inertia	gcm²	1.06	0.82	0.869	0.868	0.859	0.849	0.859	0.852	0.838	0.816	0.793

Specifications

	Thermal data	
17	Thermal resistance housing-ambient	35 K/W
18	Thermal resistance winding-housing	12 K/W
19	Thermal time constant winding	9.65 s
20	Thermal time constant motor	343 s
21	Ambient temperature	-30…+85°C
22	Max. permissible winding temperature	+125°C
	Mechanical data (sleeve bearings)	
23	Max. permissible speed	11900 rpm
24	Axial play	0.05 - 0.15 mm
25	Radial play	0.012 mm
26	Max. axial load (dynamic)	0.8 N
27	Max. force for press fits (static)	35 N
	(static, shaft supported)	280 N
28	Max. radial loading, 5 mm from flange	1.4 N
	Mechanical data (ball bearings)	
23	Max. permissible speed	11900 rpm
24	Axial play	0.05 - 0.15 mm
25	Radial play	0.025 mm
26	Max. axial load (dynamic)	2.2 N
27	Max. force for press fits (static)	30 N
	(static, shaft supported)	280 N
28	Max. radial loading, 5 mm from flange	7.8 N
	Other specifications	
29	Number of pole pairs	1
30	Number of commutator segments	7
31	Weight of motor	26 g

Values listed in the table are nominal.
Explanation of the figures on page 79.

Option
Ball bearings in place of sleeve bearings
Pigtails in place of terminals

Operating Range

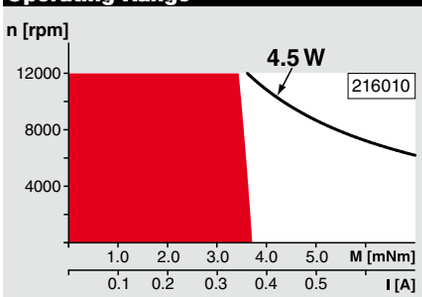

Comments

Continuous operation
In observation of above listed thermal resistance (lines 17 and 18) the maximum permissible winding temperature will be reached during continuous operation at 25°C ambient.
= Thermal limit.

Short term operation
The motor may be briefly overloaded (recurring).

Assigned power rating

maxon Modular System

Overview on page 20–25

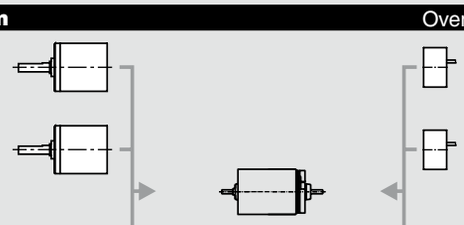

Planetary Gearhead
∅16 mm
0.1 - 0.3 Nm
Page 254

Encoder MR
32 CPT,
2 / 3 channels
Page 316

Encoder MR
128 / 256 / 512 CPT,
2 / 3 channels
Page 317

Recommended Electronics:

ESCON 36/2 DC	Page 342
ESCON Module 50/5	343
ESCON 50/5	344
EPOS2 24/2	350
EPOS2 Module 36/2	350
EPOS3 70/10 EtherCAT	357
MAXPOS 50/5	360
Notes	**22**

RE-max 21 ∅21 mm, Precious Metal Brushes CLL, 5 Watt

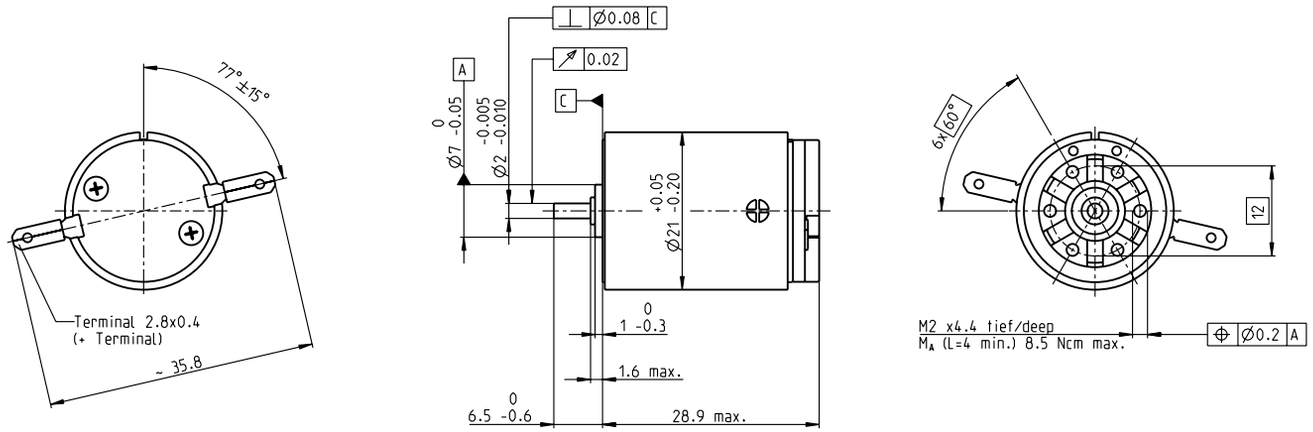

M 1:1

Stock program
Standard program
Special program (on request)

Part Numbers

			221009	221010	221011	221012	221013	221015	221016	221017	221019
Motor Data											
	Values at nominal voltage										
1	Nominal voltage	V	3	6	9	12	18	21	24	36	48
2	No load speed	rpm	8420	9440	9880	8160	9660	9450	8620	9750	9290
3	No load current	mA	176	101	70.7	42.5	34.5	28.8	22.7	17.4	12.4
4	Nominal speed	rpm	7870	8090	8280	6500	8050	7800	6950	8070	7580
5	Nominal torque (max. continuous torque)	mNm	2.23	4.41	5.59	5.66	5.56	5.45	5.51	5.28	5.26
6	Nominal current (max. continuous current)	A	0.84	0.84	0.722	0.452	0.352	0.29	0.234	0.17	0.121
7	Stall torque	mNm	29.7	30	34.3	28.1	33.7	31.6	28.8	31.1	29.1
8	Starting current	A	8.87	5.03	4.01	2.04	1.93	1.52	1.11	0.9	0.602
9	Max. efficiency	%	74	74	75	73	75	75	74	74	74
	Characteristics										
10	Terminal resistance	Ω	0.338	1.19	2.24	5.88	9.34	13.8	21.7	40	79.7
11	Terminal inductance	mH	0.013	0.0411	0.0848	0.22	0.354	0.503	0.786	1.39	2.71
12	Torque constant	mNm/A	3.35	5.95	8.55	13.8	17.5	20.8	26	34.6	48.3
13	Speed constant	rpm/V	2850	1600	1120	694	546	459	367	276	198
14	Speed / torque gradient	rpm/mNm	288	322	293	297	292	305	305	319	326
15	Mechanical time constant	ms	7.67	6.98	6.69	6.65	6.62	6.66	6.68	6.88	6.77
16	Rotor inertia	gcm²	2.54	2.07	2.18	2.14	2.16	2.09	2.09	2.06	1.99

Specifications

	Thermal data	
17	Thermal resistance housing-ambient	28 K/W
18	Thermal resistance winding-housing	8.0 K/W
19	Thermal time constant winding	10.5 s
20	Thermal time constant motor	502 s
21	Ambient temperature	-30…+65°C
22	Max. permissible winding temperature	+85°C
	Mechanical data (sleeve bearings)	
23	Max. permissible speed	16000 rpm
24	Axial play	0.05 - 0.15 mm
25	Radial play	0.012 mm
26	Max. axial load (dynamic)	1 N
27	Max. force for press fits (static)	80 N
28	Max. radial loading, 5 mm from flange	2.7 N
	Mechanical data (ball bearings)	
23	Max. permissible speed	16000 rpm
24	Axial play	0.05 - 0.15 mm
25	Radial play	0.012 mm
26	Max. axial load (dynamic)	3.3 N
27	Max. force for press fits (static)	45 N
28	Max. radial loading, 5 mm from flange	11.9 N
	Other specifications	
29	Number of pole pairs	1
30	Number of commutator segments	9
31	Weight of motor	42 g

CLL = Capacitor Long Life

Values listed in the table are nominal.
Explanation of the figures on page 79.

Option
Ball bearings in place of sleeve bearings
Pigtails in place of terminals
Without CLL

Operating Range

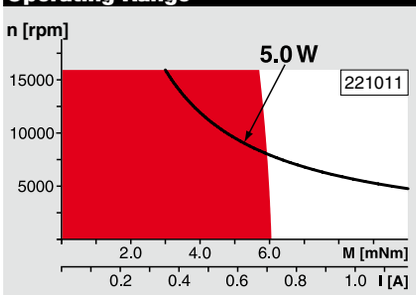

Comments

Continuous operation
In observation of above listed thermal resistance (lines 17 and 18) the maximum permissible winding temperature will be reached during continuous operation at 25°C ambient.
= Thermal limit.

Short term operation
The motor may be briefly overloaded (recurring).

Assigned power rating

maxon Modular System

Overview on page 20–25

Planetary Gearhead
∅22 mm
0.5 - 1.0 Nm
Page 262

Planetary Gearhead
∅22 mm
0.5 - 2.0 Nm
Page 264

Spur Gearhead
∅38 mm
0.1 - 0.6 Nm
Page 282

Spindle Drive
∅22 mm
Page 299/300

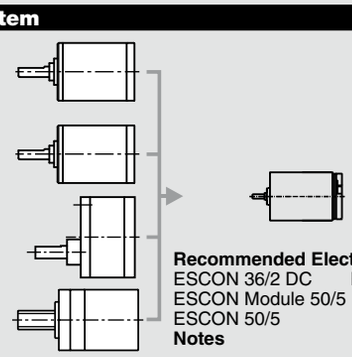

Recommended Electronics:

ESCON 36/2 DC	Page 342
ESCON Module 50/5	343
ESCON 50/5	344
Notes	**22**

RE-max 21 ∅21 mm, Precious Metal Brushes CLL, 3.5 Watt

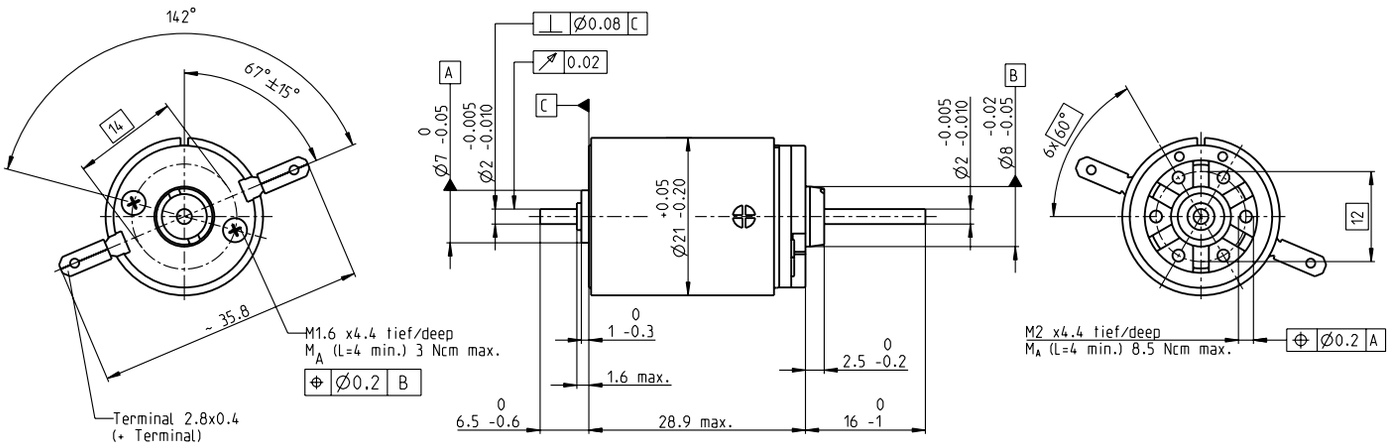

M 1:1

Stock program
Standard program
Special program (on request)

Part Numbers

			221020	221023	221024	221025	221026	221028	221030	221031	221032
Motor Data											
	Values at nominal voltage										
1	Nominal voltage	V	2	3.6	5	8.4	10	12	15	21	30
2	No load speed	rpm	5890	5950	5760	6010	5630	5670	5670	5970	6100
3	No load current	mA	54.5	30.8	21.1	13.4	10.2	8.61	6.88	5.31	3.84
4	Nominal speed	rpm	5220	4410	3830	4060	3690	3680	3680	3940	4050
5	Nominal torque (max. continuous torque)	mNm	2.54	4.65	6.25	6.16	6.21	6.07	6.06	5.91	5.85
6	Nominal current (max. continuous current)	A	0.84	0.84	0.778	0.477	0.378	0.311	0.248	0.182	0.129
7	Stall torque	mNm	19	17.3	18.3	18.9	18	17.3	17.3	17.4	17.5
8	Starting current	A	5.91	3.02	2.23	1.43	1.07	0.867	0.692	0.525	0.376
9	Max. efficiency	%	82	81	82	82	82	81	81	81	81
	Characteristics										
10	Terminal resistance	Ω	0.338	1.19	2.24	5.88	9.34	13.8	21.7	40	79.7
11	Terminal inductance	mH	0.013	0.041	0.0846	0.219	0.353	0.502	0.784	1.38	2.7
12	Torque constant	mNm/A	3.22	5.72	8.22	13.2	16.8	20	25	33.2	46.5
13	Speed constant	rpm/V	2970	1670	1160	722	569	477	382	287	206
14	Speed / torque gradient	rpm/mNm	312	348	317	321	316	330	331	346	353
15	Mechanical time constant	ms	8.32	7.57	7.25	7.22	7.18	7.23	7.25	7.46	7.35
16	Rotor inertia	gcm²	2.54	2.08	2.18	2.15	2.17	2.09	2.09	2.06	1.99

Specifications

	Thermal data	
17	Thermal resistance housing-ambient	28 K/W
18	Thermal resistance winding-housing	8.0 K/W
19	Thermal time constant winding	8.83 s
20	Thermal time constant motor	502 s
21	Ambient temperature	-30…+65°C
22	Max. permissible winding temperature	+85°C
	Mechanical data (sleeve bearings)	
23	Max. permissible speed	10000 rpm
24	Axial play	0.05 - 0.15 mm
25	Radial play	0.012 mm
26	Max. axial load (dynamic)	1 N
27	Max. force for press fits (static)	80 N
	(static, shaft supported)	440 N
28	Max. radial loading, 5 mm from flange	2.7 N
	Mechanical data (ball bearings)	
23	Max. permissible speed	10000 rpm
24	Axial play	0.05 - 0.15 mm
25	Radial play	0.025 mm
26	Max. axial load (dynamic)	3.3 N
27	Max. force for press fits (static)	45 N
	(static, shaft supported)	440 N
28	Max. radial loading, 5 mm from flange	11.9 N
	Other specifications	
29	Number of pole pairs	1
30	Number of commutator segments	9
31	Weight of motor	43 g

CLL = Capacitor Long Life

Values listed in the table are nominal.
Explanation of the figures on page 79.

Option
Ball bearings in place of sleeve bearings
Pigtails in place of terminals
Without CLL

Operating Range

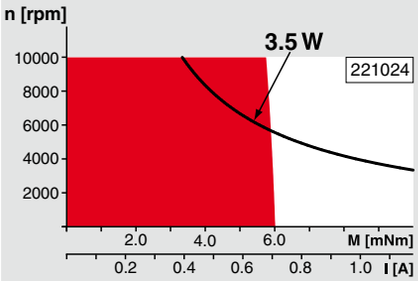

Comments

Continuous operation
In observation of above listed thermal resistance (lines 17 and 18) the maximum permissible winding temperature will be reached during continuous operation at 25°C ambient.
= Thermal limit.

Short term operation
The motor may be briefly overloaded (recurring).

Assigned power rating

maxon Modular System

Overview on page 20–25

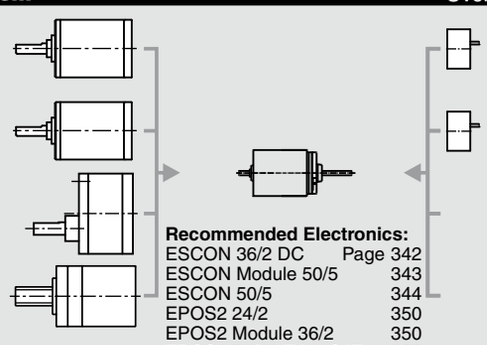

Planetary Gearhead
∅22 mm
0.5 - 1.0 Nm
Page 262

Planetary Gearhead
∅22 mm
0.5 - 2.0 Nm
Page 264

Spur Gearhead
∅38 mm
0.1 - 0.6 Nm
Page 282

Spindle Drive
∅22 mm
Page 299/300

Encoder MR
32 CPT,
2 / 3 channels
Page 316

Encoder MR
128 / 256 / 512 CPT,
2 / 3 channels
Page 318

Recommended Electronics:

ESCON 36/2 DC	Page 342
ESCON Module 50/5	343
ESCON 50/5	344
EPOS2 24/2	350
EPOS2 Module 36/2	350
EPOS3 70/10 EtherCAT	357
MAXPOS 50/5	360
Notes	**22**

RE-max 21 ∅21 mm, Graphite Brushes, 6 Watt

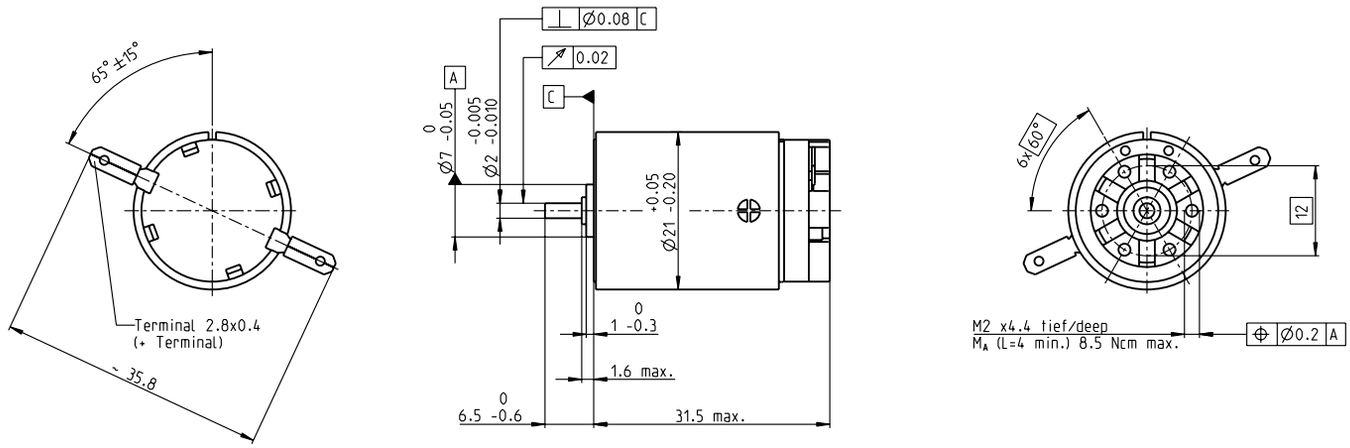

M 1:1

- Stock program
- Standard program
- Special program (on request)

Part Numbers

Motor Data		250000	250001	250002	250003	250004	250005	250006	250007	250008
Values at nominal voltage										
1 Nominal voltage	V	4	6	9	15	18	21	24	36	48
2 No load speed	rpm	11600	9730	10200	10600	9990	9770	8930	10100	9620
3 No load current	mA	155	84.2	59.1	37.1	28.8	24.1	18.9	14.6	10.3
4 Nominal speed	rpm	11000	8500	8500	8410	7830	7560	6690	7830	7320
5 Nominal torque (max. continuous torque)	mNm	1.84	3.68	5.49	6.87	6.97	6.84	6.89	6.65	6.62
6 Nominal current (max. continuous current)	A	0.72	0.72	0.72	0.551	0.439	0.362	0.291	0.212	0.151
7 Stall torque	mNm	43.9	29.9	33.7	34.1	32.7	30.6	27.9	30.2	28.2
8 Starting current	A	13.6	5.19	4.07	2.56	1.93	1.52	1.11	0.9	0.602
9 Max. efficiency	%	79	76	77	77	77	77	76	76	76
Characteristics										
10 Terminal resistance	Ω	0.295	1.16	2.21	5.86	9.32	13.8	21.7	40	79.7
11 Terminal inductance	mH	0.013	0.0411	0.0848	0.22	0.354	0.503	0.786	1.39	2.71
12 Torque constant	mNm/A	3.24	5.76	8.29	13.3	16.9	20.2	25.2	33.5	46.8
13 Speed constant	rpm/V	2950	1660	1150	716	564	473	379	285	204
14 Speed / torque gradient	rpm/mNm	268	332	307	315	311	324	325	340	347
15 Mechanical time constant	ms	7.22	7.32	7.12	7.16	7.14	7.2	7.22	7.44	7.33
16 Rotor inertia	gcm^2	2.57	2.1	2.21	2.17	2.2	2.12	2.12	2.09	2.02

Specifications

Thermal data	
17 Thermal resistance housing-ambient	28 K/W
18 Thermal resistance winding-housing	8.0 K/W
19 Thermal time constant winding	10.5 s
20 Thermal time constant motor	501 s
21 Ambient temperature	-30…+85°C
22 Max. permissible winding temperature	+125°C
Mechanical data (sleeve bearings)	
23 Max. permissible speed	12000 rpm
24 Axial play	0.05 - 0.15 mm
25 Radial play	0.012 mm
26 Max. axial load (dynamic)	1 N
27 Max. force for press fits (static)	80 N
28 Max. radial loading, 5 mm from flange	2.7 N
Mechanical data (ball bearings)	
23 Max. permissible speed	12000 rpm
24 Axial play	0.05 - 0.15 mm
25 Radial play	0.025 mm
26 Max. axial load (dynamic)	3.3 N
27 Max. force for press fits (static)	45 N
28 Max. radial loading, 5 mm from flange	11.9 N
Other specifications	
29 Number of pole pairs	1
30 Number of commutator segments	9
31 Weight of motor	42 g

Values listed in the table are nominal.
Explanation of the figures on page 79.

Option
Ball bearings in place of sleeve bearings
Pigtails in place of terminals

Operating Range

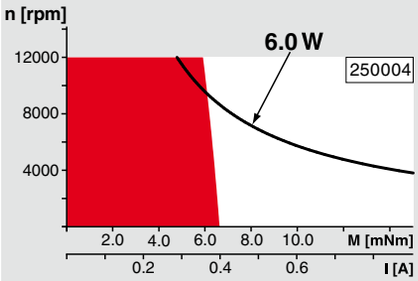

Comments

Continuous operation
In observation of above listed thermal resistance (lines 17 and 18) the maximum permissible winding temperature will be reached during continuous operation at 25°C ambient.
= Thermal limit.

Short term operation
The motor may be briefly overloaded (recurring).

Assigned power rating

maxon Modular System

Overview on page 20–25

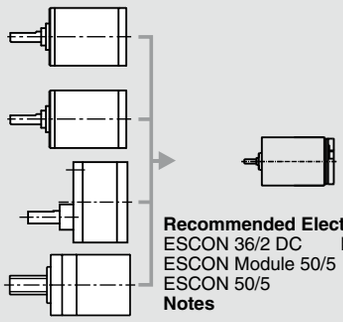

Planetary Gearhead
∅22 mm
0.5 - 1.0 Nm
Page 262

Planetary Gearhead
∅22 mm
0.5 - 2.0 Nm
Page 264

Spur Gearhead
∅38 mm
0.1 - 0.6 Nm
Page 282

Spindle Drive
∅22 mm
Page 299/300

Recommended Electronics:

ESCON 36/2 DC	Page 342
ESCON Module 50/5	343
ESCON 50/5	344
Notes	**22**

RE-max 21 ∅21 mm, Graphite Brushes, 6 Watt

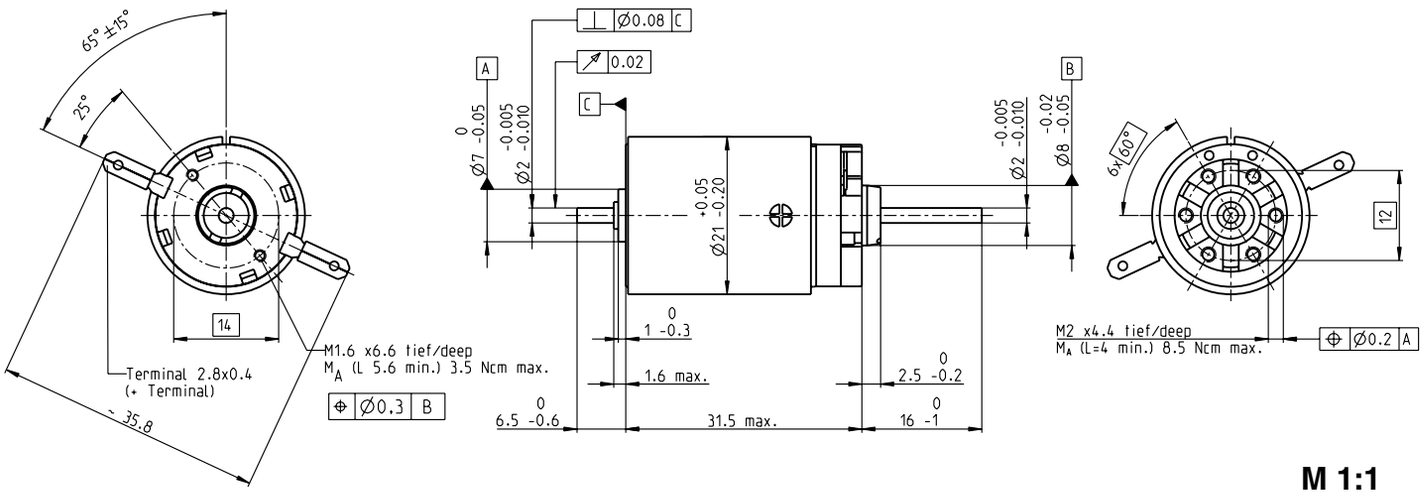

M 1:1

Stock program
Standard program
Special program (on request)

Part Numbers

Motor Data		250020	250021	250022	250023	250024	250025	250026	250027	250028
Values at nominal voltage										
1 Nominal voltage	V	4	6	9	15	18	21	24	36	48
2 No load speed	rpm	11600	9740	10200	10600	10000	9780	8930	10100	9620
3 No load current	mA	156	84.3	59.2	37.1	28.8	24.1	18.9	14.6	10.3
4 Nominal speed	rpm	11000	8510	8500	8420	7830	7560	6690	7840	7330
5 Nominal torque (max. continuous torque)	mNm	1.83	3.67	5.49	6.87	6.97	6.83	6.89	6.65	6.61
6 Nominal current (max. continuous current)	A	0.72	0.72	0.72	0.551	0.439	0.362	0.291	0.212	0.151
7 Stall torque	mNm	43.9	29.9	33.7	34.1	32.7	30.6	27.9	30.1	28.2
8 Starting current	A	13.6	5.19	4.07	2.56	1.93	1.52	1.11	0.9	0.602
9 Max. efficiency	%	79	76	77	77	77	76	76	76	76
Characteristics										
10 Terminal resistance	Ω	0.295	1.16	2.21	5.86	9.32	13.8	21.7	40	79.7
11 Terminal inductance	mH	0.013	0.0411	0.0848	0.22	0.354	0.503	0.786	1.39	2.71
12 Torque constant	mNm/A	3.24	5.76	8.28	13.3	16.9	20.2	25.2	33.5	46.8
13 Speed constant	rpm/V	2950	1660	1150	717	564	474	379	285	204
14 Speed / torque gradient	rpm/mNm	268	333	308	315	311	325	326	341	348
15 Mechanical time constant	ms	7.14	7.23	7.03	7.07	7.05	7.1	7.12	7.34	7.23
16 Rotor inertia	gcm²	2.54	2.07	2.18	2.14	2.16	2.09	2.09	2.06	1.99

Specifications

Thermal data	
17 Thermal resistance housing-ambient	28 K/W
18 Thermal resistance winding-housing	8.0 K/W
19 Thermal time constant winding	10.5 s
20 Thermal time constant motor	502 s
21 Ambient temperature	-30…+85°C
22 Max. permissible winding temperature	+125°C
Mechanical data (sleeve bearings)	
23 Max. permissible speed	12000 rpm
24 Axial play	0.05 - 0.15 mm
25 Radial play	0.012 mm
26 Max. axial load (dynamic)	1 N
27 Max. force for press fits (static)	80 N
(static, shaft supported)	240 N
28 Max. radial loading, 5 mm from flange	2.7 N
Mechanical data (ball bearings)	
23 Max. permissible speed	12000 rpm
24 Axial play	0.05 - 0.15 mm
25 Radial play	0.025 mm
26 Max. axial load (dynamic)	3.3 N
27 Max. force for press fits (static)	45 N
(static, shaft supported)	240 N
28 Max. radial loading, 5 mm from flange	11.9 N
Other specifications	
29 Number of pole pairs	1
30 Number of commutator segments	9
31 Weight of motor	42 g

Values listed in the table are nominal.
Explanation of the figures on page 79.

Option
Ball bearings in place of sleeve bearings
Pigtails in place of terminals

Operating Range

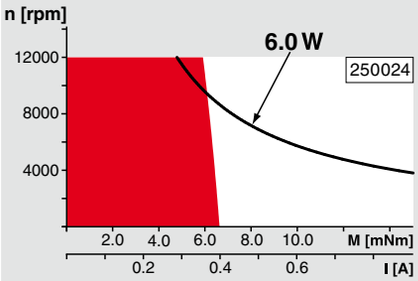

Comments

Continuous operation
In observation of above listed thermal resistance (lines 17 and 18) the maximum permissible winding temperature will be reached during continuous operation at 25°C ambient.
= Thermal limit.

Short term operation
The motor may be briefly overloaded (recurring).

Assigned power rating

maxon Modular System

Overview on page 20–25

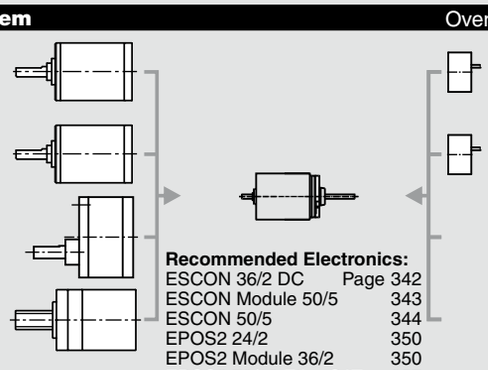

Planetary Gearhead
∅22 mm
0.5 - 1.0 Nm
Page 262

Planetary Gearhead
∅22 mm
0.5 - 2.0 Nm
Page 264

Spur Gearhead
∅38 mm
0.1 - 0.6 Nm
Page 282

Spindle Drive
∅22 mm
Page 299/300

Recommended Electronics:

ESCON 36/2 DC	Page 342
ESCON Module 50/5	343
ESCON 50/5	344
EPOS2 24/2	350
EPOS2 Module 36/2	350
EPOS3 70/10 EtherCAT	357
MAXPOS 50/5	360
Notes	**22**

Encoder MR
32 CPT,
2 / 3 channels
Page 316

Encoder MR
128 / 256 / 512 CPT,
2 / 3 channels
Page 318

RE-max 24 ∅24 mm, Precious Metal Brushes CLL, 10 Watt

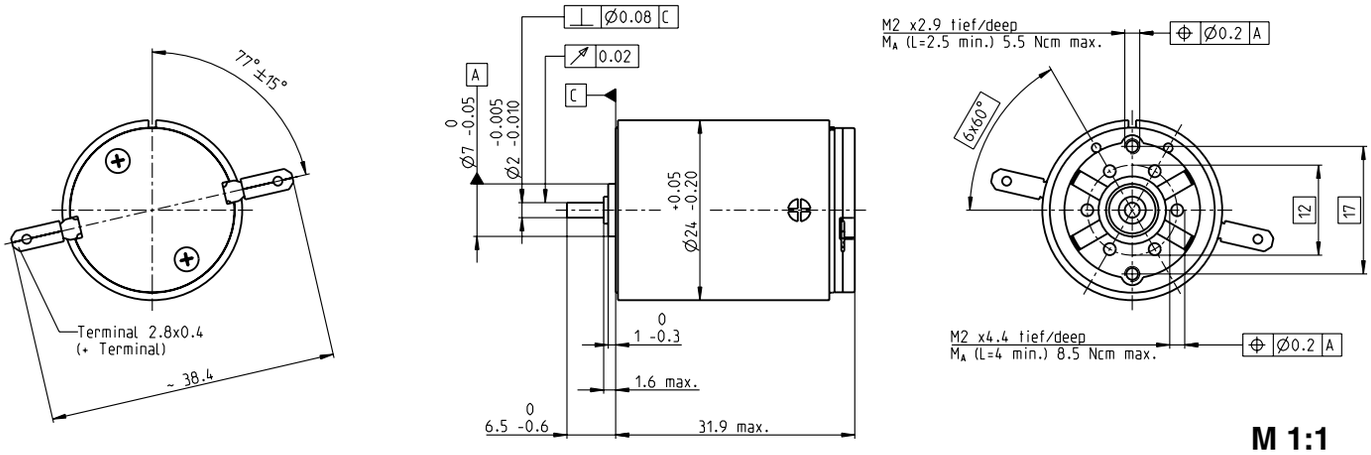

M 1:1

Stock program
Standard program
Special program (on request)

Part Numbers

			220404	220405	220406	220407	220408	220410	220415	220416	220418	220419	220422	220423
Motor Data														
	Values at nominal voltage													
1	Nominal voltage	V	9	15	15	18	20	24	30	36	42	48	48	48
2	No load speed	rpm	8240	9470	8320	8910	8930	9350	9470	9160	8640	7450	5290	4770
3	No load current	mA	18.8	14.1	11.5	10.7	9.65	8.65	7.07	5.58	4.35	3.01	1.79	1.54
4	Nominal speed	rpm	6950	8040	6900	7480	7480	7890	8000	7680	7150	5930	3730	3220
5	Nominal torque (max. continuous torque)	mNm	8.55	10.3	10.5	10.4	10.3	10.1	10	10	9.99	9.95	9.82	9.93
6	Nominal current (max. continuous current)	A	0.84	0.698	0.62	0.55	0.49	0.422	0.339	0.273	0.22	0.165	0.115	0.105
7	Stall torque	mNm	53.3	67.4	60.3	64.3	62.9	64.6	64.5	62.2	57.9	49	33.4	30.6
8	Starting current	A	5.12	4.47	3.52	3.34	2.95	2.65	2.14	1.66	1.25	0.799	0.387	0.32
9	Max. efficiency	%	88	89	89	89	89	89	89	89	89	88	87	87
	Characteristics													
10	Terminal resistance	Ω	1.76	3.36	4.27	5.39	6.78	9.07	14	21.6	33.5	60.1	124	150
11	Terminal inductance	mH	0.0735	0.154	0.2	0.251	0.309	0.406	0.618	0.952	1.45	2.56	5.06	6.22
12	Torque constant	mNm/A	10.4	15.1	17.2	19.2	21.3	24.4	30.1	37.4	46.3	61.3	86.3	95.6
13	Speed constant	rpm/V	919	634	557	497	448	391	317	255	206	156	111	99.8
14	Speed / torque gradient	rpm/mNm	155	141	138	139	143	145	147	148	150	153	159	156
15	Mechanical time constant	ms	6.61	6.37	6.34	6.34	6.36	6.49	6.48	6.5	6.52	6.53	6.61	6.57
16	Rotor inertia	gcm²	4.07	4.32	4.37	4.36	4.26	4.27	4.2	4.2	4.16	4.09	3.97	4.01

Specifications

	Thermal data	
17	Thermal resistance housing-ambient	24 K/W
18	Thermal resistance winding-housing	5.1 K/W
19	Thermal time constant winding	8.32 s
20	Thermal time constant motor	637 s
21	Ambient temperature	-30…+65°C
22	Max. permissible winding temperature	+85°C
	Mechanical data (sleeve bearings)	
23	Max. permissible speed	16000 rpm
24	Axial play	0.05 - 0.15 mm
25	Radial play	0.012 mm
26	Max. axial load (dynamic)	1 N
27	Max. force for press fits (static)	80 N
28	Max. radial loading, 5 mm from flange	2.8 N
	Mechanical data (ball bearings)	
23	Max. permissible speed	16000 rpm
24	Axial play	0.05 - 0.15 mm
25	Radial play	0.025 mm
26	Max. axial load (dynamic)	3.3 N
27	Max. force for press fits (static)	45 N
28	Max. radial loading, 5 mm from flange	12.3 N
	Other specifications	
29	Number of pole pairs	1
30	Number of commutator segments	9
31	Weight of motor	70 g

CLL = Capacitor Long Life

Values listed in the table are nominal.
Explanation of the figures on page 79.

Option
Ball bearings in place of sleeve bearings
Pigtails in place of terminals
Without CLL

Operating Range

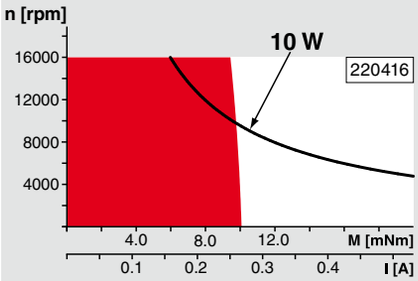

Comments

Continuous operation
In observation of above listed thermal resistance (lines 17 and 18) the maximum permissible winding temperature will be reached during continuous operation at 25°C ambient.
= Thermal limit.

Short term operation
The motor may be briefly overloaded (recurring).

Assigned power rating

maxon Modular System

Overview on page 20–25

Planetary Gearhead
∅22 mm
0.5 - 2.0 Nm
Page 264

Spur Gearhead
∅38 mm
0.1 - 0.6 Nm
Page 282

Spindle Drive
∅22 mm
Page 299/300

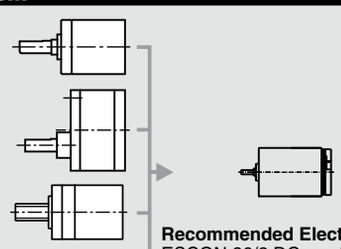

Recommended Electronics:

ESCON 36/2 DC	Page 342
ESCON Module 50/5	343
ESCON 50/5	344
ESCON 70/10	344
Notes	**22**

RE-max 24 ∅24 mm, Precious Metal Brushes CLL, 6.5 Watt

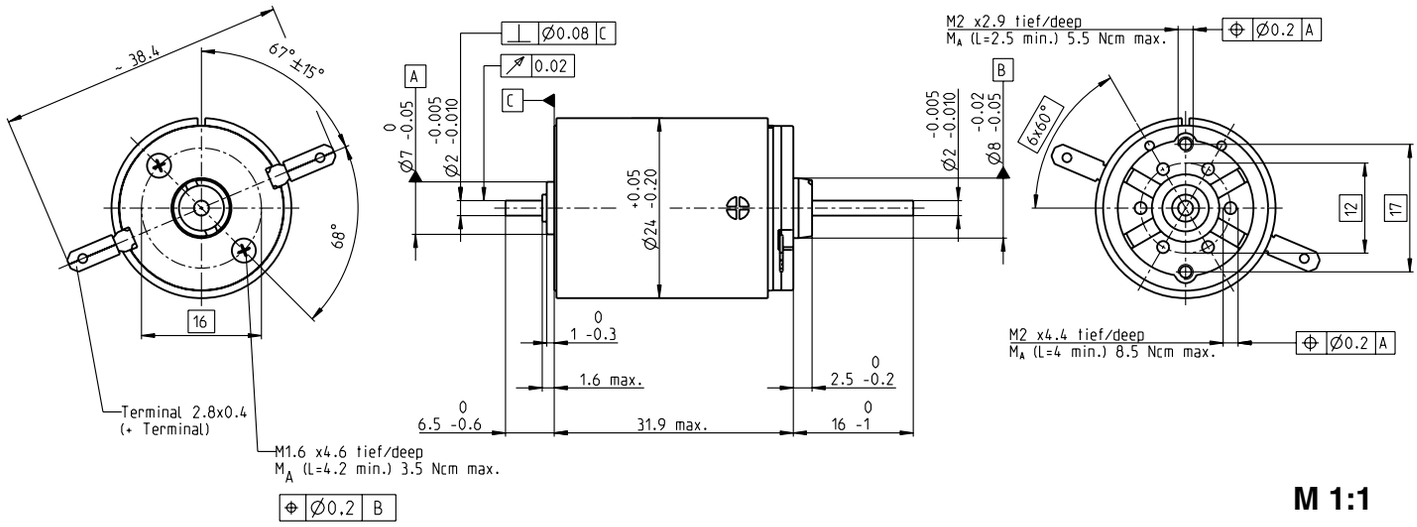

M 1:1

Stock program
Standard program
Special program (on request)

Part Numbers

		220425	220426	220427	220428	220429	220430	220431	220432	220433	220434	220435	220437
Motor Data													
Values at nominal voltage													
1 Nominal voltage	V	6	9	9	12	12	15	18	24	30	36	48	48
2 No load speed	rpm	5480	5670	4980	5930	5350	5830	5670	6090	6160	5580	5280	4760
3 No load current	mA	18.7	13.1	10.9	10.5	9.04	8.18	6.55	5.45	4.43	3.2	2.22	1.92
4 Nominal speed	rpm	4190	4230	3540	4490	3890	4360	4190	4610	4670	4060	3730	3220
5 Nominal torque (max. continuous torque)	mNm	8.56	10.4	10.6	10.5	10.4	10.2	10.2	10.1	10	9.97	9.77	9.88
6 Nominal current (max. continuous current)	A	0.84	0.704	0.625	0.554	0.494	0.426	0.343	0.275	0.221	0.165	0.115	0.105
7 Stall torque	mNm	35.5	40.4	36.2	42.8	37.7	40.4	38.7	41.5	41.4	36.7	33.4	30.6
8 Starting current	A	3.42	2.68	2.11	2.23	1.77	1.65	1.28	1.11	0.894	0.599	0.387	0.32
9 Max. efficiency	%	86	87	86	87	86	87	86	87	87	86	86	85
Characteristics													
10 Terminal resistance	Ω	1.76	3.36	4.27	5.39	6.78	9.07	14	21.6	33.5	60.1	124	150
11 Terminal inductance	mH	0.0735	0.154	0.2	0.251	0.309	0.406	0.618	0.952	1.45	2.56	5.06	6.22
12 Torque constant	mNm/A	10.4	15.1	17.2	19.2	21.3	24.4	30.1	37.4	46.3	61.3	86.3	95.6
13 Speed constant	rpm/V	919	634	557	497	448	391	317	255	206	156	111	99.8
14 Speed / torque gradient	rpm/mNm	155	141	138	139	143	145	147	148	150	153	159	156
15 Mechanical time constant	ms	6.62	6.38	6.35	6.35	6.36	6.49	6.48	6.5	6.53	6.54	6.62	6.57
16 Rotor inertia	gcm²	4.07	4.32	4.38	4.36	4.26	4.27	4.2	4.21	4.16	4.1	3.97	4.01

Specifications

	Thermal data	
17	Thermal resistance housing-ambient	24 K/W
18	Thermal resistance winding-housing	5.1 K/W
19	Thermal time constant winding	8.32 s
20	Thermal time constant motor	637 s
21	Ambient temperature	-30…+65°C
22	Max. permissible winding temperature	+85°C
	Mechanical data (sleeve bearings)	
23	Max. permissible speed	9500 rpm
24	Axial play	0.05 - 0.15 mm
25	Radial play	0.012 mm
26	Max. axial load (dynamic)	1 N
27	Max. force for press fits (static)	80 N
	(static, shaft supported)	440 N
28	Max. radial loading, 5 mm from flange	2.8 N
	Mechanical data (ball bearings)	
23	Max. permissible speed	9500 rpm
24	Axial play	0.05 - 0.15 mm
25	Radial play	0.025 mm
26	Max. axial load (dynamic)	3.3 N
27	Max. force for press fits (static)	45 N
	(static, shaft supported)	440 N
28	Max. radial loading, 5 mm from flange	12.3 N
	Other specifications	
29	Number of pole pairs	1
30	Number of commutator segments	9
31	Weight of motor	71 g

CLL = Capacitor Long Life

Values listed in the table are nominal.
Explanation of the figures on page 79.

Option
Ball bearings in place of sleeve bearings
Pigtails in place of terminals
Without CLL

Operating Range

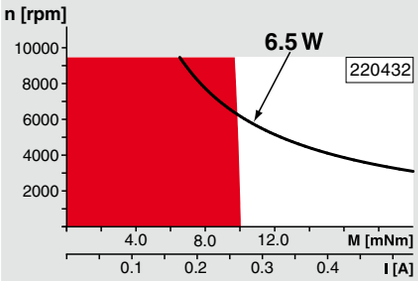

Comments

Continuous operation
In observation of above listed thermal resistance (lines 17 and 18) the maximum permissible winding temperature will be reached during continuous operation at 25°C ambient.
= Thermal limit.

Short term operation
The motor may be briefly overloaded (recurring).

Assigned power rating

maxon Modular System

Overview on page 20–25

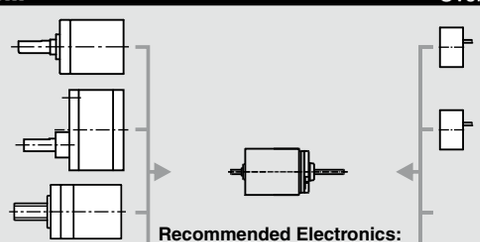

Planetary Gearhead
∅22 mm
0.5 - 2.0 Nm
Page 264

Spur Gearhead
∅38 mm
0.1 - 0.6 Nm
Page 282

Spindle Drive
∅22 mm
Page 299/300

Encoder MR
32 CPT,
2 / 3 channels
Page 316

Encoder MR
128 / 256 / 512 CPT,
2 / 3 channels
Page 318

Recommended Electronics:

ESCON 36/2 DC	Page 342
ESCON Module 50/5	343
ESCON 50/5	344
EPOS2 24/2	350
EPOS2 Module 36/2	350
EPOS3 70/10 EtherCAT	357
MAXPOS 50/5	360
Notes	**22**

RE-max 24 ∅24 mm, Graphite Brushes, 11 Watt

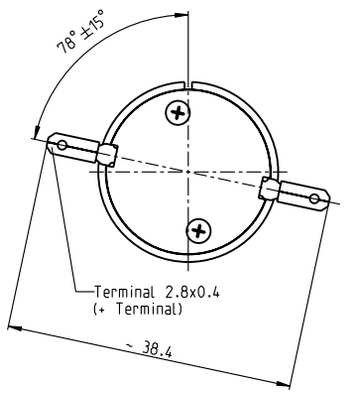

M 1:1

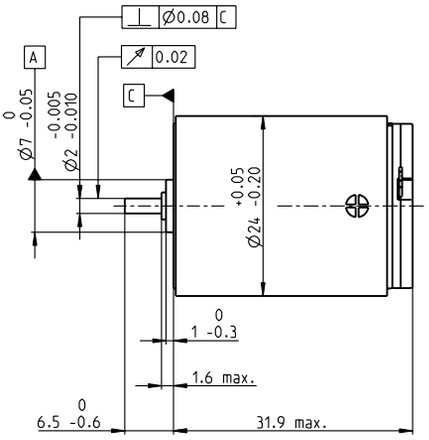

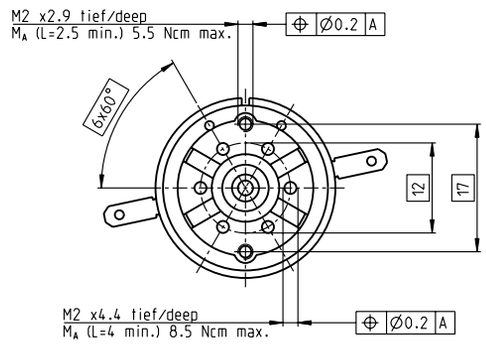

Stock program
Standard program
Special program (on request)

Part Numbers

Motor Data		222036	222037	222038	222039	222040	222041	222042	222043	222044	222045	222046	222047
Values at nominal voltage													
1 Nominal voltage	V	9	12	15	18	18	24	24	36	42	48	48	48
2 No load speed	rpm	8080	7470	8230	8820	7950	9270	7510	9090	8580	7390	5240	4720
3 No load current	mA	45.4	30.9	27.6	24.9	22.1	19.8	15.5	12.9	10.3	7.59	5.15	4.59
4 Nominal speed	rpm	6290	5720	6510	7110	6220	7560	5760	7380	6850	5630	3410	2900
5 Nominal torque (max. continuous torque)	mNm	10.8	11.7	11.8	11.7	11.7	11.6	11.8	11.6	11.6	11.7	11.6	11.8
6 Nominal current (max. continuous current)	A	1.08	0.806	0.714	0.635	0.571	0.495	0.406	0.324	0.262	0.198	0.14	0.128
7 Stall torque	mNm	52.4	52.5	59	63.1	55.6	65	51.9	62.9	58.6	49.6	33.9	31.1
8 Starting current	A	5.04	3.48	3.44	3.28	2.61	2.66	1.72	1.68	1.27	0.809	0.393	0.325
9 Max. efficiency	%	80	80	82	82	82	83	81	83	83	81	78	78
Characteristics													
10 Terminal resistance	Ω	1.78	3.45	4.36	5.48	6.9	9.02	13.9	21.4	33.1	59.3	122	148
11 Terminal inductance	mH	0.0735	0.155	0.2	0.252	0.309	0.406	0.619	0.953	1.46	2.56	5.07	6.23
12 Torque constant	mNm/A	10.4	15.1	17.2	19.2	21.3	24.4	30.1	37.4	46.3	61.3	86.3	95.6
13 Speed constant	rpm/V	919	634	557	497	448	391	317	255	206	156	111	99.8
14 Speed / torque gradient	rpm/mNm	158	145	141	142	145	144	146	146	148	151	157	154
15 Mechanical time constant	ms	6.72	6.55	6.48	6.46	6.47	6.45	6.44	6.43	6.44	6.45	6.52	6.47
16 Rotor inertia	gcm²	4.07	4.32	4.37	4.36	4.26	4.27	4.2	4.2	4.16	4.09	3.97	4.01

Specifications

	Thermal data	
17	Thermal resistance housing-ambient	24 K/W
18	Thermal resistance winding-housing	5.1 K/W
19	Thermal time constant winding	8.02 s
20	Thermal time constant motor	637 s
21	Ambient temperature	-30…+85°C
22	Max. permissible winding temperature	+125°C
	Mechanical data (sleeve bearings)	
23	Max. permissible speed	9800 rpm
24	Axial play	0.05 - 0.15 mm
25	Radial play	0.012 mm
26	Max. axial load (dynamic)	1 N
27	Max. force for press fits (static)	80 N
28	Max. radial loading, 5 mm from flange	2.8 N
	Mechanical data (ball bearings)	
23	Max. permissible speed	9800 rpm
24	Axial play	0.05 - 0.15 mm
25	Radial play	0.025 mm
26	Max. axial load (dynamic)	3.3 N
27	Max. force for press fits (static)	45 N
28	Max. radial loading, 5 mm from flange	12.3 N
	Other specifications	
29	Number of pole pairs	1
30	Number of commutator segments	9
31	Weight of motor	70 g

Values listed in the table are nominal.
Explanation of the figures on page 79.

Option
Ball bearings in place of sleeve bearings
Pigtails in place of terminals

Operating Range

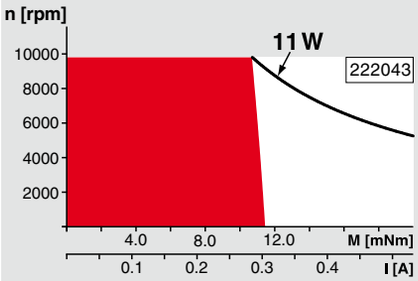

Comments

Continuous operation
In observation of above listed thermal resistance (lines 17 and 18) the maximum permissible winding temperature will be reached during continuous operation at 25°C ambient.
= Thermal limit.

Short term operation
The motor may be briefly overloaded (recurring).

Assigned power rating

maxon Modular System

Overview on page 20–25

Planetary Gearhead
∅22 mm
0.5 - 2.0 Nm
Page 264

Spur Gearhead
∅38 mm
0.1 - 0.6 Nm
Page 282

Spindle Drive
∅22 mm
Page 299/300

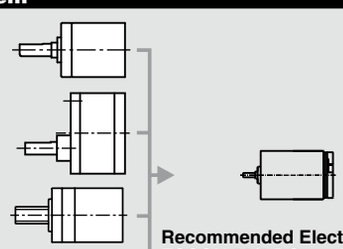

Recommended Electronics:

ESCON 36/2 DC	Page 342
ESCON Module 50/5	343
ESCON 50/5	344
ESCON 70/10	344
Notes	**22**

RE-max 24 ∅24 mm, Graphite Brushes, 11 Watt

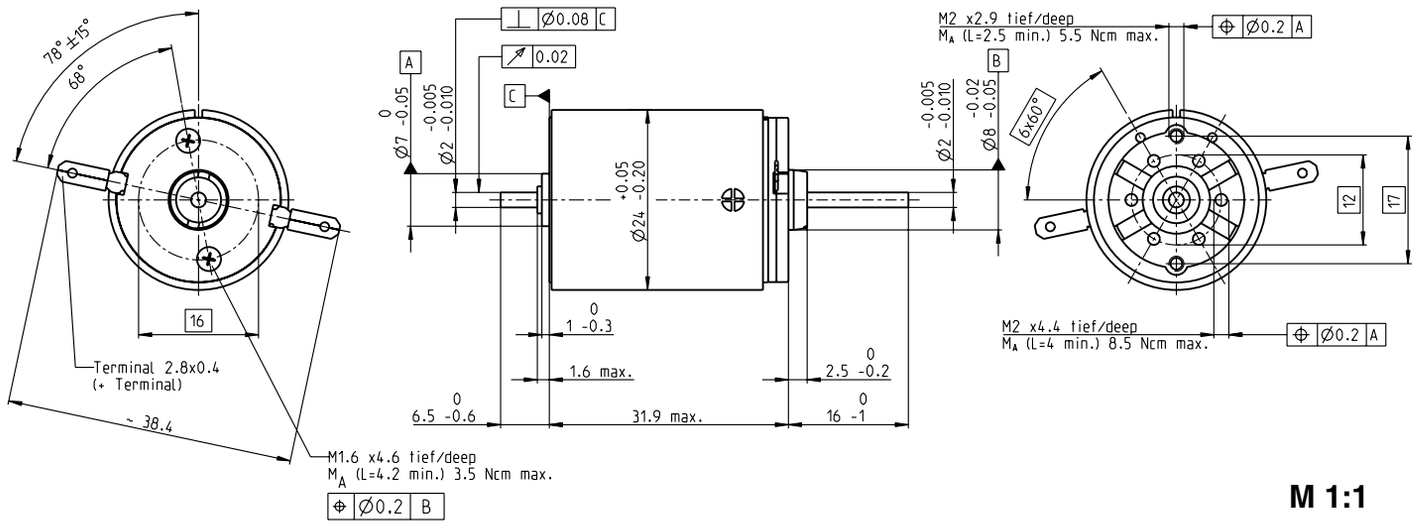

M 1:1

Stock program
Standard program
Special program (on request)

Part Numbers

			222048	222049	222050	222051	222052	222053	222054	222055	222056	222057	222058	222059
Motor Data														
	Values at nominal voltage													
1	Nominal voltage	V	9	12	15	18	18	24	24	36	42	48	48	48
2	No load speed	rpm	8080	7470	8230	8820	7950	9270	7510	9090	8580	7390	5240	4720
3	No load current	mA	45.4	30.9	27.6	24.9	22.1	19.8	15.5	12.9	10.3	7.59	5.15	4.59
4	Nominal speed	rpm	6290	5720	6510	7110	6220	7560	5760	7380	6850	5630	3410	2900
5	Nominal torque (max. continuous torque)	mNm	10.8	11.7	11.8	11.7	11.7	11.6	11.8	11.6	11.6	11.7	11.6	11.8
6	Nominal current (max. continuous current)	A	1.08	0.806	0.714	0.635	0.571	0.495	0.406	0.324	0.262	0.198	0.14	0.128
7	Stall torque	mNm	52.4	52.5	59	63.1	55.6	65	51.9	62.9	58.6	49.7	33.9	31.1
8	Starting current	A	5.04	3.48	3.44	3.28	2.61	2.66	1.72	1.68	1.27	0.809	0.393	0.325
9	Max. efficiency	%	80	80	82	82	82	83	81	83	83	81	78	78
	Characteristics													
10	Terminal resistance	Ω	1.78	3.45	4.36	5.48	6.9	9.02	13.9	21.4	33.1	59.3	122	148
11	Terminal inductance	mH	0.0735	0.155	0.2	0.252	0.309	0.406	0.619	0.953	1.46	2.56	5.07	6.23
12	Torque constant	mNm/A	10.4	15.1	17.2	19.2	21.3	24.4	30.1	37.4	46.3	61.3	86.3	95.6
13	Speed constant	rpm/V	919	634	557	497	448	391	317	255	206	156	111	99.8
14	Speed / torque gradient	rpm/mNm	158	145	141	142	145	144	146	146	148	151	157	154
15	Mechanical time constant	ms	6.72	6.55	6.48	6.46	6.47	6.45	6.44	6.43	6.44	6.45	6.52	6.47
16	Rotor inertia	gcm²	4.07	4.32	4.37	4.36	4.26	4.27	4.2	4.2	4.16	4.09	3.97	4.01

Specifications

	Thermal data	
17	Thermal resistance housing-ambient	24 K/W
18	Thermal resistance winding-housing	5.1 K/W
19	Thermal time constant winding	8.02 s
20	Thermal time constant motor	637 s
21	Ambient temperature	-30…+85°C
22	Max. permissible winding temperature	+125°C
	Mechanical data (sleeve bearings)	
23	Max. permissible speed	9800 rpm
24	Axial play	0.05 - 0.15 mm
25	Radial play	0.012 mm
26	Max. axial load (dynamic)	1 N
27	Max. force for press fits (static)	80 N
	(static, shaft supported)	240 N
28	Max. radial loading, 5 mm from flange	2.8 N
	Mechanical data (ball bearings)	
23	Max. permissible speed	9800 rpm
24	Axial play	0.05 - 0.15 mm
25	Radial play	0.025 mm
26	Max. axial load (dynamic)	3.3 N
27	Max. force for press fits (static)	45 N
	(static, shaft supported)	240 N
28	Max. radial loading, 5 mm from flange	12.3 N
	Other specifications	
29	Number of pole pairs	1
30	Number of commutator segments	9
31	Weight of motor	71 g

Values listed in the table are nominal.
Explanation of the figures on page 79.

Option
Ball bearings in place of sleeve bearings
Pigtails in place of terminals

Operating Range

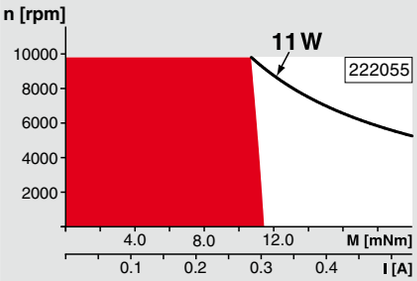

Comments

Continuous operation
In observation of above listed thermal resistance (lines 17 and 18) the maximum permissible winding temperature will be reached during continuous operation at 25°C ambient.
= Thermal limit.

Short term operation
The motor may be briefly overloaded (recurring).

Assigned power rating

maxon Modular System

Overview on page 20–25

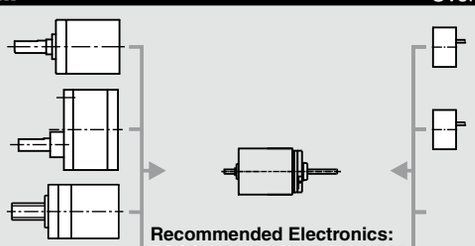

Planetary Gearhead
∅22 mm
0.5 - 2.0 Nm
Page 264

Spur Gearhead
∅38 mm
0.1 - 0.6 Nm
Page 282

Spindle Drive
∅22 mm
Page 299/300

Encoder MR
32 CPT,
2 / 3 channels
Page 316

Encoder MR
128 / 256 / 512 CPT,
2 / 3 channels
Page 318

Recommended Electronics:

ESCON 36/2 DC	Page 342
ESCON Module 50/5	343
ESCON 50/5	344
ESCON 70/10	344
EPOS2 24/2	350
EPOS2 Module 36/2	350
EPOS3 70/10 EtherCAT	357
MAXPOS 50/5	360
Notes	**22**

RE-max 29 ∅29 mm, Precious Metal Brushes CLL, 15 Watt

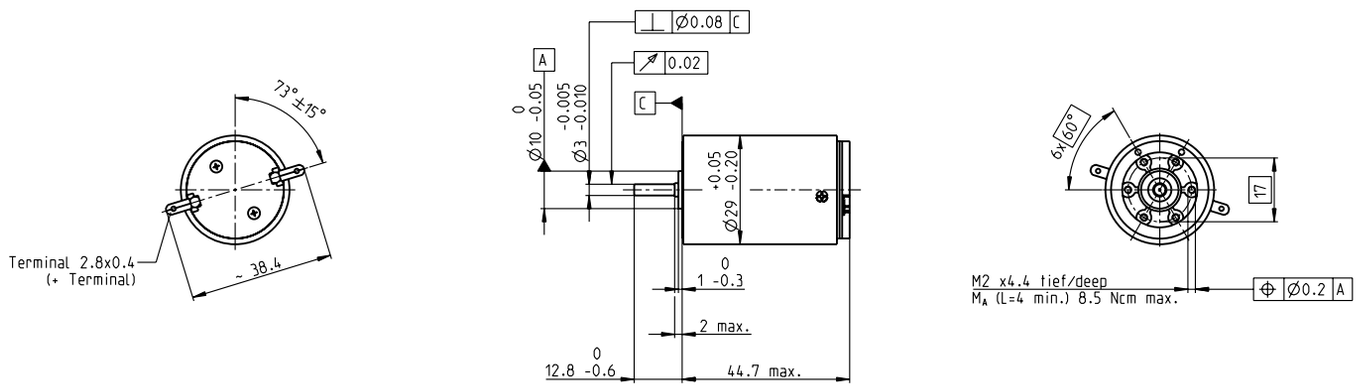

M 1:2

Stock program
Standard program
Special program (on request)

Part Numbers

		226748	226749	226751	226752	226753	226754	226755	226756	226757	226759	226760	226761	226762	226763	226764
Motor Data																
Values at nominal voltage																
1 Nominal voltage	V	7.2	9	12	18	18	24	30	36	42	48	48	48	48	48	48
2 No load speed	rpm	6320	7020	6010	6650	5490	5810	6010	6480	6550	6120	5260	4880	4050	3260	2720
3 No load current	mA	43	41.7	23.6	18.9	13.4	11.1	9.45	9.01	7.87	6.1	4.65	4.07	2.95	2.04	1.5
4 Nominal speed	rpm	6080	6710	5430	6020	4700	4990	5190	5650	5680	5280	4410	4020	3180	2380	1820
5 Nominal torque (max. continuous torque)	mNm	8.67	9.78	15.6	21.2	25.9	27	26.6	26.5	25	25.9	26.2	26.2	25.9	25.8	25.6
6 Nominal current (max. continuous current)	A	0.84	0.84	0.84	0.84	0.84	0.695	0.569	0.508	0.417	0.353	0.305	0.283	0.232	0.186	0.153
7 Stall torque	mNm	200	205	156	219	177	190	193	206	188	187	161	149	120	95.7	77.5
8 Starting current	A	18.4	16.8	8.22	8.49	5.68	4.81	4.05	3.9	3.07	2.51	1.86	1.59	1.06	0.683	0.461
9 Max. efficiency	%	91	91	90	91	91	91	91	91	90	91	90	90	90	90	89
Characteristics																
10 Terminal resistance	Ω	0.39	0.536	1.46	2.12	3.17	4.99	7.41	9.24	13.7	19.2	25.8	30.1	45.1	70.2	104
11 Terminal inductance	mH	0.0353	0.0447	0.108	0.199	0.292	0.464	0.676	0.839	1.12	1.67	2.26	2.63	3.81	5.86	8.46
12 Torque constant	mNm/A	10.9	12.2	19	25.8	31.2	39.4	47.5	53	61.1	74.7	86.9	93.7	113	140	168
13 Speed constant	rpm/V	879	781	502	370	306	242	201	180	156	128	110	102	84.6	68.2	56.8
14 Speed / torque gradient	rpm/mNm	31.6	34.3	38.6	30.4	31	30.7	31.3	31.4	34.9	32.8	32.7	32.8	33.9	34.2	35.2
15 Mechanical time constant	ms	4.77	4.63	4.42	4.32	4.29	4.28	4.28	4.27	4.31	4.3	4.3	4.29	4.32	4.33	4.34
16 Rotor inertia	gcm^2	14.4	12.9	10.9	13.6	13.2	13.3	13.1	13	11.8	12.5	12.6	12.5	12.2	12.1	11.8

Specifications

Thermal data	
17 Thermal resistance housing-ambient	15.8 K/W
18 Thermal resistance winding-housing	4.0 K/W
19 Thermal time constant winding	15.4 s
20 Thermal time constant motor	928 s
21 Ambient temperature	-30…+65°C
22 Max. permissible winding temperature	+85°C
Mechanical data (sleeve bearings)	
23 Max. permissible speed	11 000 rpm
24 Axial play	0.1 - 0.2 mm
25 Radial play	0.012 mm
26 Max. axial load (dynamic)	1.7 N
27 Max. force for press fits (static)	80 N
28 Max. radial loading, 5 mm from flange	5.5 N
Mechanical data (ball bearings)	
23 Max. permissible speed	11 000 rpm
24 Axial play	0.1 - 0.2 mm
25 Radial play	0.025 mm
26 Max. axial load (dynamic)	5 N
27 Max. force for press fits (static)	75 N
28 Max. radial loading, 5 mm from flange	20.5 N
Other specifications	
29 Number of pole pairs	1
30 Number of commutator segments	13
31 Weight of motor	159 g

CLL = Capacitor Long Life

Values listed in the table are nominal.
Explanation of the figures on page 79.

Option
Ball bearings in place of sleeve bearings
Pigtails in place of terminals
Without CLL

Operating Range

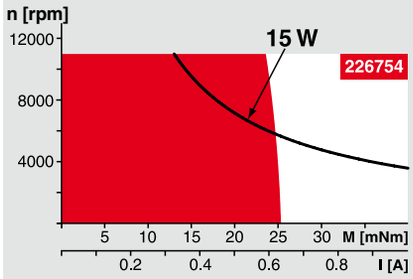

Comments

Continuous operation
In observation of above listed thermal resistance (lines 17 and 18) the maximum permissible winding temperature will be reached during continuous operation at 25°C ambient.
= Thermal limit.

Short term operation
The motor may be briefly overloaded (recurring).

Assigned power rating

maxon Modular System

Overview on page 20–25

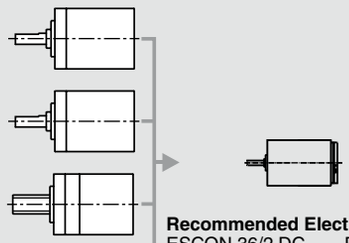

Planetary Gearhead
∅32 mm
0.75 - 4.5 Nm
Page 273

Planetary Gearhead
∅32 mm
1.0 - 6.0 Nm
Page 277

Spindle Drive
∅32 mm
Page 301–303

Recommended Electronics:

ESCON 36/2 DC	Page 342
ESCON Module 50/5	343
ESCON 50/5	344
ESCON 70/10	344
Notes	**22**

RE-max 29 ∅29 mm, Precious Metal Brushes CLL, 9 Watt

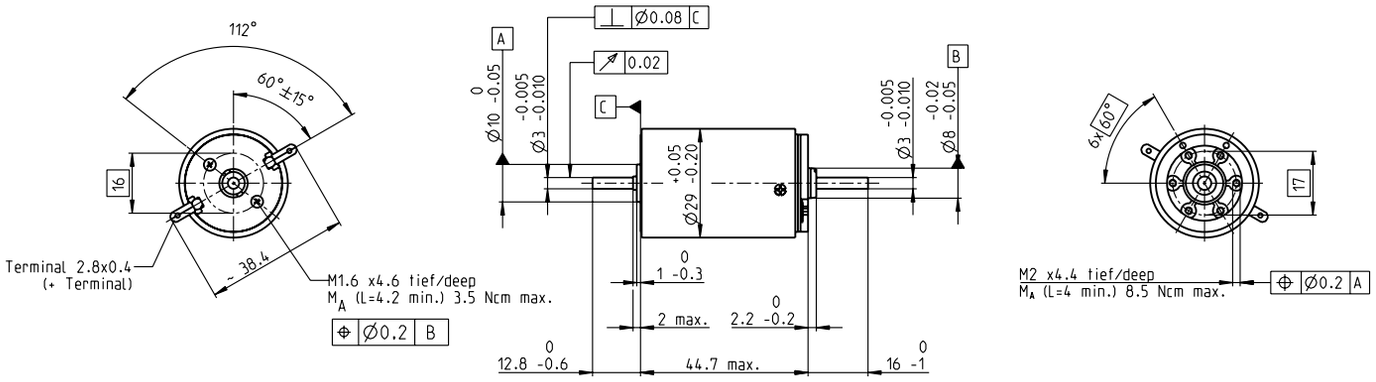

M 1:2

Stock program
Standard program
Special program (on request)

Part Numbers

		226765	226767	226770	226771	226772	226773	226774	226775	226776	226778	226779	226780	226781	226782	226783
Motor Data																
Values at nominal voltage																
1 Nominal voltage	V	4.5	6	9	12	15	18	24	24	30	36	36	42	48	48	48
2 No load speed	rpm	3940	4670	4500	4430	4570	4350	4810	4310	4670	4590	3940	4270	4050	3260	2710
3 No load current	mA	39.5	38.7	24.4	17.8	15	11.5	10.1	8.52	7.75	6.27	4.93	4.79	3.86	2.76	2.1
4 Nominal speed	rpm	3700	4370	3930	3800	3780	3530	3980	3480	3800	3740	3090	3410	3180	2380	1820
5 Nominal torque (max. continuous torque)	mNm	8.71	9.81	15.5	21.3	25.8	27.1	26.7	26.7	25.2	26	26.2	26.1	25.7	25.7	25.4
6 Nominal current (max. continuous current)	A	0.84	0.84	0.84	0.84	0.84	0.697	0.57	0.511	0.419	0.354	0.306	0.283	0.231	0.186	0.153
7 Stall torque	mNm	125	137	117	146	148	142	154	138	134	140	121	131	120	95.7	77.5
8 Starting current	A	11.5	11.2	6.16	5.66	4.73	3.61	3.24	2.6	2.2	1.88	1.39	1.39	1.06	0.683	0.461
9 Max. efficiency	%	89	89	88	89	89	89	89	89	89	89	89	89	89	88	87
Characteristics																
10 Terminal resistance	Ω	0.39	0.536	1.46	2.12	3.17	4.99	7.41	9.24	13.7	19.2	25.8	30.1	45.1	70.2	104
11 Terminal inductance	mH	0.0353	0.0447	0.108	0.199	0.292	0.464	0.676	0.839	1.12	1.67	2.26	2.63	3.81	5.86	8.46
12 Torque constant	mNm/A	10.9	12.2	19	25.8	31.2	39.4	47.5	53	61.1	74.7	86.9	93.7	113	140	168
13 Speed constant	rpm/V	879	781	502	370	306	242	201	180	156	128	110	102	84.6	68.2	56.8
14 Speed / torque gradient	rpm/mNm	31.6	34.3	38.6	30.4	31	30.7	31.3	31.4	34.9	32.8	32.7	32.8	33.9	34.2	35.2
15 Mechanical time constant	ms	4.78	4.63	4.43	4.32	4.3	4.29	4.29	4.28	4.32	4.31	4.31	4.3	4.33	4.34	4.35
16 Rotor inertia	gcm²	14.4	12.9	11	13.6	13.2	13.3	13.1	13	11.8	12.6	12.6	12.5	12.2	12.1	11.8

Specifications

Thermal data

17	Thermal resistance housing-ambient	15.8 K/W
18	Thermal resistance winding-housing	4.0 K/W
19	Thermal time constant winding	15.9 s
20	Thermal time constant motor	928 s
21	Ambient temperature	-30…+65°C
22	Max. permissible winding temperature	+85°C

Mechanical data (sleeve bearings)

23	Max. permissible speed	6700 rpm
24	Axial play	0.1 - 0.2 mm
25	Radial play	0.012 mm
26	Max. axial load (dynamic)	1.7 N
27	Max. force for press fits (static)	80 N
	(static, shaft supported)	1200 N
28	Max. radial loading, 5 mm from flange	5.5 N

Mechanical data (ball bearings)

23	Max. permissible speed	6700 rpm
24	Axial play	0.1 - 0.2 mm
25	Radial play	0.025 mm
26	Max. axial load (dynamic)	5.0 N
27	Max. force for press fits (static)	75 N
	(static, shaft supported)	1200 N
28	Max. radial loading, 5 mm from flange	20.5 N

Other specifications

29	Number of pole pairs	1
30	Number of commutator segments	13
31	Weight of motor	161 g

CLL = Capacitor Long Life

Values listed in the table are nominal.
Explanation of the figures on page 79.

Option
Ball bearings in place of sleeve bearings
Pigtails in place of terminals
Without CLL

Operating Range

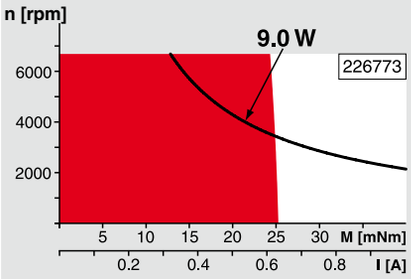

Comments

Continuous operation
In observation of above listed thermal resistance (lines 17 and 18) the maximum permissible winding temperature will be reached during continuous operation at 25°C ambient.
= Thermal limit.

Short term operation
The motor may be briefly overloaded (recurring).

Assigned power rating

maxon Modular System

Overview on page 20–25

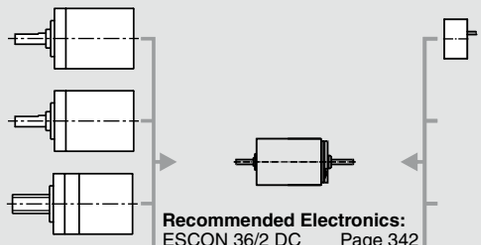

Planetary Gearhead
∅32 mm
0.75 - 4.5 Nm
Page 273

Planetary Gearhead
∅32 mm
1.0 - 6.0 Nm
Page 277

Spindle Drive
∅32 mm
Page 301–303

Encoder MR
128 - 1000 CPT,
3 channels
Page 319

Recommended Electronics:

ESCON 36/2 DC	Page 342
ESCON Module 50/5	343
ESCON 50/5	344
EPOS2 24/2	350
EPOS2 Module 36/2	350
EPOS2 24/5, EPOS2 50/5	351
EPOS2 P 24/5	354
EPOS3 70/10 EtherCAT	357
MAXPOS 50/5	360
Notes	**22**

RE-max 29 ∅29 mm, Graphite Brushes, 22 Watt

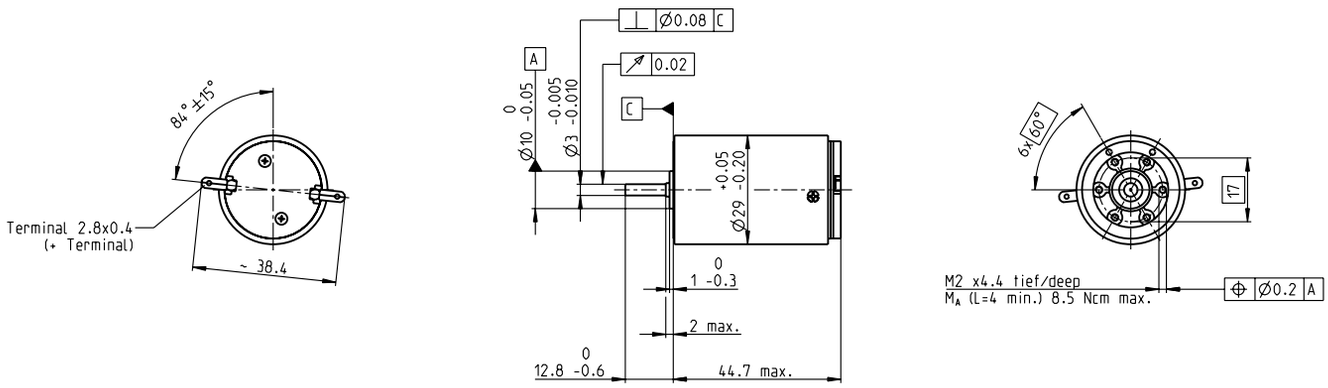

M 1:2

Stock program
Standard program
Special program (on request)

Part Numbers

		226784	226785	226787	226788	226789	226790	226791	226792	226793	226795	226796	226797	226798	226799	226800
Motor Data																
Values at nominal voltage																
1 Nominal voltage	V	9	12	18	24	30	36	42	48	48	48	48	48	48	48	48
2 No load speed	rpm	7890	9350	9010	8860	9140	8700	8410	8630	7470	6110	5250	4870	4040	3250	2700
3 No load current	mA	78.2	73.7	46.8	34.2	28.6	22.3	18.3	16.5	13.7	10.5	8.7	7.93	6.33	4.9	3.96
4 Nominal speed	rpm	7580	8960	8270	8050	8200	7760	7450	7670	6450	5100	4240	3850	3000	2200	1630
5 Nominal torque (max. continuous torque)	mNm	10.9	12.3	19.7	27	30.8	31.1	30.8	30.7	29.4	30.8	31.1	31.2	30.9	30.9	30.6
6 Nominal current (max. continuous current)	A	1.08	1.08	1.08	1.08	1.01	0.811	0.666	0.595	0.495	0.423	0.366	0.34	0.28	0.225	0.186
7 Stall torque	mNm	284	299	242	299	300	287	271	277	215	188	162	150	120	95.7	77.5
8 Starting current	A	26.1	24.5	12.7	11.6	9.6	7.29	5.71	5.22	3.52	2.51	1.86	1.6	1.06	0.684	0.461
9 Max. efficiency	%	89	89	88	90	90	89	89	89	88	88	87	87	85	84	82
Characteristics																
10 Terminal resistance	Ω	0.345	0.49	1.41	2.07	3.13	4.94	7.36	9.19	13.6	19.1	25.8	30.1	45.1	70.2	104
11 Terminal inductance	mH	0.0354	0.0448	0.108	0.199	0.292	0.465	0.677	0.841	1.12	1.67	2.26	2.63	3.81	5.87	8.48
12 Torque constant	mNm/A	10.9	12.2	19	25.8	31.2	39.4	47.5	53	61.1	74.7	86.9	93.7	113	140	168
13 Speed constant	rpm/V	879	781	502	370	306	242	201	180	156	128	110	102	84.6	68.2	56.8
14 Speed / torque gradient	rpm/mNm	27.9	31.4	37.4	29.8	30.6	30.4	31.1	31.3	34.8	32.7	32.6	32.7	33.8	34.2	35.1
15 Mechanical time constant	ms	4.21	4.24	4.28	4.23	4.24	4.24	4.26	4.26	4.3	4.3	4.3	4.29	4.32	4.34	4.35
16 Rotor inertia	gcm^2	14.4	12.9	11	13.6	13.2	13.3	13.1	13	11.8	12.5	12.6	12.5	12.2	12.1	11.8

Specifications

Thermal data

17	Thermal resistance housing-ambient	15.8 K/W
18	Thermal resistance winding-housing	4.0 K/W
19	Thermal time constant winding	17.3 s
20	Thermal time constant motor	927 s
21	Ambient temperature	-30…+85°C
22	Max. permissible winding temperature	+125°C

Mechanical data (ball bearings)

23	Max. permissible speed	10400 rpm
24	Axial play	0.1 - 0.2 mm
25	Radial play	0.025 mm
26	Max. axial load (dynamic)	5.0 N
27	Max. force for press fits (static)	75 N
28	Max. radial loading, 5 mm from flange	20.5 N

Mechanical data (sleeve bearings)

23	Max. permissible speed	10400 rpm
24	Axial play	0.1 - 0.2 mm
25	Radial play	0.012 mm
26	Max. axial load (dynamic)	1.7 N
27	Max. force for press fits (static)	80 N
28	Max. radial loading, 5 mm from flange	12.3 N

Other specifications

29	Number of pole pairs	1
30	Number of commutator segments	13
31	Weight of motor	159 g

Values listed in the table are nominal.
Explanation of the figures on page 79.

Option
Sleeve bearings in place of ball bearings
Pigtails in place of terminals

Operating Range

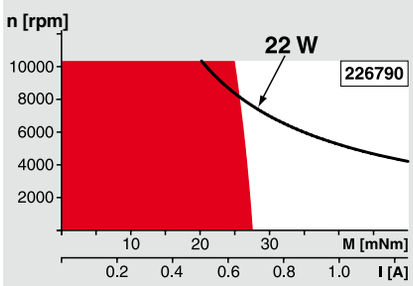

Comments

Continuous operation
In observation of above listed thermal resistance (lines 17 and 18) the maximum permissible winding temperature will be reached during continuous operation at 25°C ambient.
= Thermal limit.

Short term operation
The motor may be briefly overloaded (recurring).

Assigned power rating

maxon Modular System

Overview on page 20–25

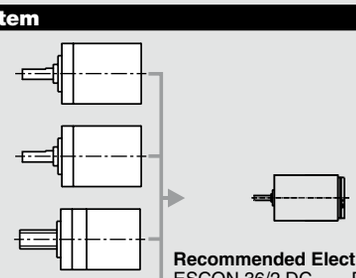

Planetary Gearhead
∅32 mm
0.75 - 4.5 Nm
Page 273

Planetary Gearhead
∅32 mm
1.0 - 6.0 Nm
Page 277

Spindle Drive
∅32 mm
Page 301–303

Recommended Electronics:

ESCON 36/2 DC	Page 342
ESCON Module 50/5	343
ESCON 50/5	344
ESCON 70/10	344
Notes	**22**

RE-max 29 ∅29 mm, Graphite Brushes, 22 Watt

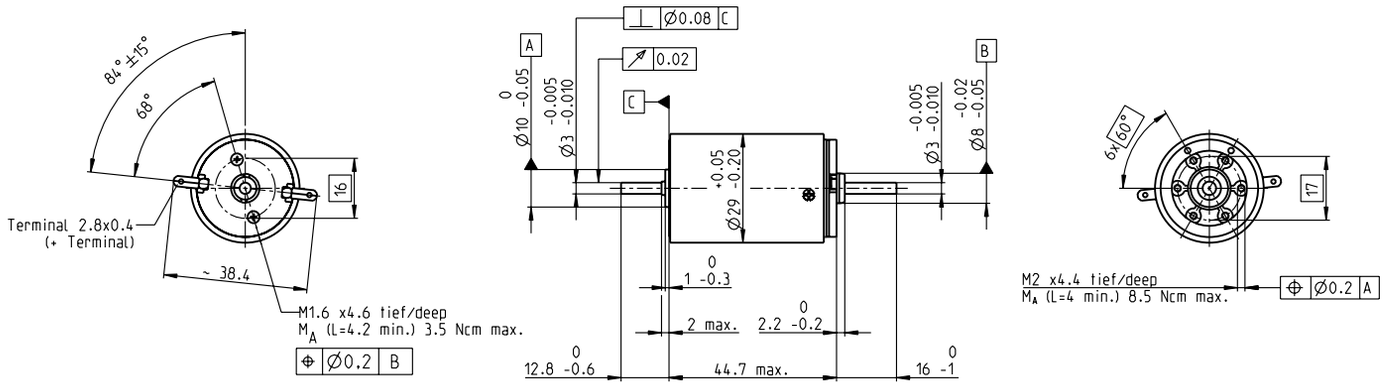

M 1:2

Stock program
Standard program
Special program (on request)

Part Numbers

		226801	226802	226805	226806	226807	226808	226809	226810	226811	226815	226816	226817	226818	226819	226820
Motor Data																
Values at nominal voltage																
1 Nominal voltage	V	9	12	18	24	30	36	42	48	48	48	48	48	48	48	48
2 No load speed	rpm	7890	9350	9010	8860	9140	8700	8410	8630	7470	6110	5250	4870	4040	3250	2700
3 No load current	mA	78.2	73.7	46.8	34.2	28.6	22.3	18.3	16.5	13.7	10.5	8.7	7.93	6.33	4.9	3.96
4 Nominal speed	rpm	7580	8960	8270	8050	8200	7760	7450	7670	6450	5100	4240	3850	3000	2200	1630
5 Nominal torque (max. continuous torque)	mNm	10.9	12.3	19.7	27	30.8	31.1	30.8	30.7	29.4	30.8	31.1	31.2	30.9	30.9	30.6
6 Nominal current (max. continuous current)	A	1.08	1.08	1.08	1.08	1.01	0.811	0.666	0.595	0.495	0.423	0.366	0.34	0.28	0.225	0.186
7 Stall torque	mNm	284	299	242	299	300	287	271	277	215	188	162	150	120	95.7	77.5
8 Starting current	A	26.1	24.5	12.7	11.6	9.6	7.29	5.71	5.22	3.52	2.51	1.86	1.6	1.06	0.684	0.461
9 Max. efficiency	%	89	89	88	90	90	89	89	89	88	88	87	87	85	84	82
Characteristics																
10 Terminal resistance	Ω	0.345	0.49	1.41	2.07	3.13	4.94	7.36	9.19	13.6	19.1	25.8	30.1	45.1	70.2	104
11 Terminal inductance	mH	0.0345	0.0437	0.106	0.195	0.285	0.453	0.66	0.82	1.09	1.63	2.21	2.57	3.72	5.73	8.27
12 Torque constant	mNm/A	10.9	12.2	19	25.8	31.2	39.4	47.5	53	61.1	74.7	86.9	93.7	113	140	168
13 Speed constant	rpm/V	879	781	502	370	306	242	201	180	156	128	110	102	84.6	68.2	56.8
14 Speed / torque gradient	rpm/mNm	27.9	31.4	37.4	29.8	30.6	30.4	31.1	31.3	34.8	32.7	32.6	32.7	33.8	34.2	35.1
15 Mechanical time constant	ms	4.21	4.24	4.29	4.23	4.24	4.25	4.26	4.26	4.3	4.3	4.3	4.3	4.32	4.34	4.35
16 Rotor inertia	gcm²	14.4	12.9	11	13.6	13.2	13.3	13.1	13	11.8	12.5	12.6	12.5	12.2	12.1	11.8

Specifications

Thermal data	
17 Thermal resistance housing-ambient	15.8 K/W
18 Thermal resistance winding-housing	4.0 K/W
19 Thermal time constant winding	17.3 s
20 Thermal time constant motor	927 s
21 Ambient temperature	-30…+85°C
22 Max. permissible winding temperature	+125°C
Mechanical data (ball bearings)	
23 Max. permissible speed	10400 rpm
24 Axial play	0.1 - 0.2 mm
25 Radial play	0.025 mm
26 Max. axial load (dynamic)	5.0 N
27 Max. force for press fits (static)	75 N
(static, shaft supported)	1200 N
28 Max. radial loading, 5 mm from flange	20.5 N
Mechanical data (sleeve bearings)	
23 Max. permissible speed	10400 rpm
24 Axial play	0.1 - 0.2 mm
25 Radial play	0.025 mm
26 Max. axial load (dynamic)	1.7 N
27 Max. force for press fits (static)	80 N
(static, shaft supported)	1200 N
28 Max. radial loading, 5 mm from flange	5.5 N
Other specifications	
29 Number of pole pairs	1
30 Number of commutator segments	13
31 Weight of motor	161 g

Values listed in the table are nominal.
Explanation of the figures on page 79.

Option
Sleeve bearings in place of ball bearings
Pigtails in place of terminals

Operating Range

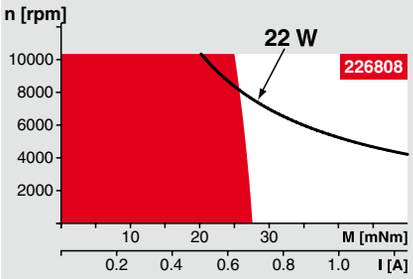

Comments

Continuous operation
In observation of above listed thermal resistance (lines 17 and 18) the maximum permissible winding temperature will be reached during continuous operation at 25°C ambient.
= Thermal limit.

Short term operation
The motor may be briefly overloaded (recurring).

Assigned power rating

maxon Modular System

Overview on page 20–25

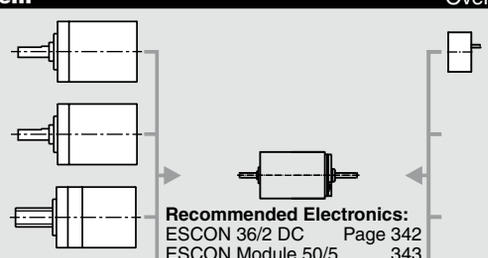

Planetary Gearhead
∅32 mm
0.75 - 4.5 Nm
Page 273

Planetary Gearhead
∅32 mm
1.0 - 6.0 Nm
Page 277

Spindle Drive
∅32 mm
Page 301–303

Encoder MR
128 - 1000 CPT,
3 channels
Page 319

Recommended Electronics:

ESCON 36/2 DC	Page 342
ESCON Module 50/5	343
ESCON 50/5	344
ESCON 70/10	344
EPOS2 24/2	350
EPOS2 Module 36/2	350
EPOS2 24/5, EPOS2 50/5	351
EPOS2 P 24/5	354
EPOS3 70/10 EtherCAT	357
MAXPOS 50/5	360
Notes	**22**

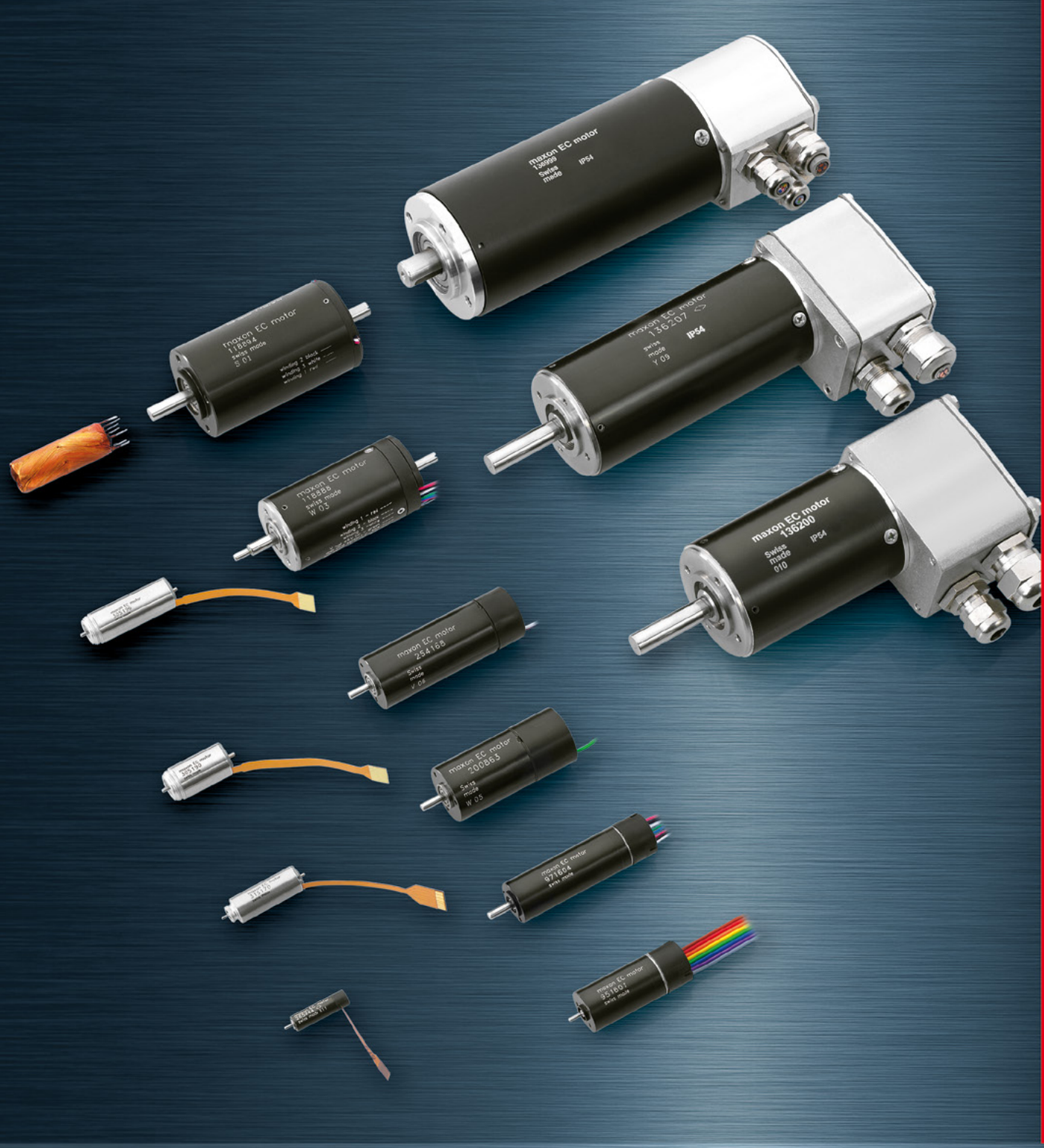

maxon EC motor

maxon EC (BLDC) motor

The electronically commutated EC motors are characterized especially by their favorable torque characteristics, high power, extremely broad speed range and, of course, by their unsurpassed service life.

Standard Specification No. 101	168
Explanation of the EC motors	169
EC Program	170–196
EC-max Program	199–207
EC-4pole Program	211–216
EC flat Program	218–237

maxon Standard Specification

With our Standard Specification we offer you a means to judge maxon motors in the most important respects. To our knowledge it covers normal applications. The Standard Specification is part of our “General Conditions of Sale”.

Electrical equipment must meet certain minimum requirements, which was introduced into the European market after 1.1.96. Small motors will be identified as components and will therefore represent no seperate electrical equipment within the sense of the guidelines.

For information on standards and directives, refer to page 14 and 15.

The Standard Specification No. 101 for maxon EC motor

1. **Principles**
The **standard specification** defines checks and tests performed on the **complete motor and during the production process.** In order to guarantee our high quality standard, we check compliance to specified measurements and characteristics of materials, parts and subassemblies through the manufacturing process and the complete motor. The obtained measurements are recorded and can be made available to customers if required. Random sampling plans are according to ISO 2859, MIL STD 105E and DIN/ISO 3951 (inspection by attributes, sequential sampling, variables inspection) as well as internal manufacturing controls. This standard specification always applies unless a different one has been agreed between the customer and maxon.

2. **Data**

2.1 **Electrical data** apply at 22° to 25°C and use of a 1 quadrant controller with block commutation: Data control within one minute running time.

Measurement voltage	+/- 0.5 % for voltages ≥ 3 V and ± 0.015 V for voltages ≤ 3 V
No load speed	± 10%
No load current	≤ maximum specified value
Direction of rotation	CW/CCW
Motor position	horizontal or vertical

Notes: Measurement voltage may vary from the nominal voltage listed in the catalog. The no load current specified in the catalog is a typical value and not the maximum one. When connecting the motor according to the catalog (or labelling), the shaft turns CW as seen from the mounting end.
Terminal resistance is verified through random sampling.
Inductance is determined at product certification. Test frequency is 1 kHz. Terminal inductance depends on frequency. The specified electromechanical parameters are sufficiently guaranteed with these measurements.

2.2 **Mechanical data** per outline drawing: Standard measuring instruments (for electrical length measuring DIN 32876, micrometer per DIN 863, dial indicator DIN 878, caliper per DIN 862, bore caliper DIN 2245, thread caliper per DIN 2280 and others) are used.

2.3 **Rotor imbalance:** Rotors for EC motors with air-flux winding are balanced according to our standard guidelines during manufacturing. For EC motors with wound stator teeth, the rotors are mounted in gauges but not balanced as standard. Only a subjective assessment is possible on the complete motor which is done during random sampling.

2.4 **Electric strength:** Each motor is completely assembled and then tested for ground faults, at 250 or 500 V DC depending on the diameter.

2.5 **Noise:** Tests are carried out for anomalies within a lot on a subjective basis. Depending on speed, the motions in the motor cause noise and vibration of varying degrees, frequency and intensity. The noise level experienced with a single sample unit should not be interpreted as indicative of the noise or vibration level to be expected of future deliveries.

2.6 **Service life:** Durability tests are carried out under uniform internal criteria as part of product certification. The service life of an EC motor essentially depends on the service life of the bearings. This is determined by type of operation, bearing load and ambient conditions. Consequently, the many possible variations do not allow us to make a general statement on service life.

2.7 **Environmental influences**
Protection against corrosion: Our products are tested during product certification on the basis of DIN EN 60068-2-30.
Coating of components: Surface treatment and coating procedures used by maxon are selected on the basis of their merits to resist corrosion. These treatments are evaluated at product certification according to their applicable standard.

3. Parameters that differ from or are additional to the data sheet can be set and are a central part of our systematic testing as the customer’s specification. Test/inspection certificates are issued by prior agreement.

January 2010 edition/subject to change

Explanation of the pages 170–237

Dimensional drawings
Presentation of the views according to the projection method E (ISO).
All dimensions in [mm].

Motor Data
The values in lines 2 – 15 are valid when using block commutation.

Line 1 **Nominal voltage** U_N [Volt]
is the applied voltage between two powered phases in block commutation. See page 32 for the timing diagram of the voltage in the three phases. All nominal data (lines 2 – 9) refer to this voltage. Lower and higher voltages are permissible, provided that limits are not exceeded.

Line 2 **No load speed** n_0 [rpm] ±10%
is the speed at which the unloaded motor runs with the nominal voltage applied. It is approximately proportional to the applied voltage.

Line 3 **No load current** I_0 [mA] ±50%
This is the typical current that the unloaded motor draws when operating at nominal voltage. It increases with rising speed owing to bearing friction and iron losses. No load friction depends heavily on temperature. It decreases in extended operation and increases at lower temperatures.

Line 4 **Nominal speed** n_N [rpm]
is the speed set for operation at nominal voltage and nominal torque at a motor temperature of 25°C.

Line 5 **Nominal torque** M_N [mNm]
is the torque generated for operation at nominal voltage and nominal current at a motor temperature of 25°C. It is at the limit of the motor's continuous operation range. Higher torques heat up the winding too much.

Line 6 **Nominal current** I_N [A]
is the current in the active phase in block commutation that generates the nominal torque at the given nominal speed (= max. permissible continuous load current). The maximum winding temperature is reached at 25°C ambient temperature in continuous operation with I_N. I_N decreases as speed increases due to additional losses in the lamination. For the EC 10 flat motor the nominal operating point is given varying at half no load speed, as the thermal limit is not reached at nominal voltage.

Line 7 **Stall torque** M_H [mNm]
is the torque produced by the motor when at standstill. Rising motor temperatures reduce stall torque.

Line 8 **Starting current** I_A [A]
is the quotient from nominal voltage and the motor's terminal resistance. Starting current is equivalent to stall torque. With larger motors, I_A cannot often be reached due to the amplifier's current limits.

Line 9 **Maximum efficiency** η_{max} [%]
is the optimal relationship between input and output power at nominal voltage. It also doesn't always denote the optimal operating point.

Line 10 **Terminal resistance phase to phase** R [Ω]
is determined through the resistance at 25°C between two connections.

Line 11 **Terminal inductance phase to phase** L [mH]
is the winding inductance between two connections. It is measured at 1 kHz, sinusoidal.

Line 12 **Torque constant** k_M [mNm/A]
This may also be referred to as "specific torque" and represents the quotient from generated torque and applicable current.

Line 13 **Speed constant** k_n [rpm/V]
indicates the theoretical no load speed per volt of applied voltage, disregarding friction losses.

Line 14 **Speed/torque gradient** Δ_n/Δ_M [rpm/mNm]
The speed/torque gradient is an indicator of the motor's performance. The smaller the value, the more powerful the motor and consequently the less motor speed varies with load variations. It is based on the quotient of ideal no load speed and ideal stall torque (tolerance ± 20%).
With flat motors, the real gradient depends on speed: at higher speeds, it is steeper, but flatter at lower speeds. The real gradient at nominal voltage can be approximated by a straight line between no load speed and the nominal operating point (see page 45).

Line 15 **Mechanical time constant** τ_m [ms]
is the time required for the rotor to accelerate from standstill to 63% of its no load speed.

Line 16 **Rotor moment of inertia** J_R [gcm²]
is the mass moment of inertia of the rotor, based on the axis of rotation.

Line 17 **Thermal resistance housing-ambient** R_{th2} [K/W]
and
Line 18 **Thermal resistance winding-housing** R_{th1} [K/W]
Characteristic values of thermal contact resistance without additional heat sinking. Lines 17 and 18 combined define the maximum heating at a given power loss (load). Thermal resistance R_{th2} on motors with metal flanges can decrease by up to 80% if the motor is coupled directly to a good heat-conducting (e.g. metallic) mounting rather than a plastic panel.

Line 19 **Thermal time constant winding** τ_w [s]
and
Line 20 **Thermal time constant motor** τ_s [s]
These are the typical reaction times for a temperature change of winding and motor. It can be seen that the motor reacts much more sluggishly in thermal terms than the winding. The values are calculated from the product of thermal capacity and given heat resistances.

Line 21 **Ambient temperature** [°C]
Operating temperature range. This derives from the heat reliability of the materials used and viscosity of bearing lubrication.

Line 22 **Max. permissible winding temperature** [°C]
Maximum permissible winding temperature.

Line 23 **Max. permissible speed** n_{max} [rpm]
is the maximum recommended speed based on thermal and mechanical perspectives. A reduced service life can be expected at higher speeds.

Line 24 **Axial play** [mm]
For non-preloaded motors, this represents the tolerance limits of the factory-set bearing play. The latter is included in shaft length tolerances. Preloading cancels out axial play up to the given axial loading.

Line 25 **Radial play** [mm]
Radial play derives from the bearings' radial air. A spring (bearing preload) cancels out radial play up to the given axial loading.

Line 26/27 **Max. axial loading** [N]
Dynamically: axial loading permissible in operation. If different values apply for traction and thrust, the smaller value is given.
Statically: maximum axial force applying to the shaft at standstill where no residual damage occurs.
Shaft supported: maximum axial force applying to the shaft at standstill if the force is not input at the other shaft end. This is not possible for motors with only one shaft end.

Line 28 **Max. radial loading** [N]
The value is given for a typical clearance from the flange; this value falls the greater the clearance.

Line 29 **Number of pole pairs**
Number of north poles of the permanent magnet. The phase streams and commutation signals pass through per revolution p cycles. Servo-controllers require the correct details of the number of pole pairs.

Line 30 **Number of phases**
All maxon EC motors have three phases.

Line 31 **Weight of motor** [g]

Line 33 **Max. torque** M_{max} [mNm]
Maximum torque the motor can briefly deliver. It is limited by the overload protection of the electronics.

Line 34 **Max. current** I_{max} [A]
Surge current with which the peak torque is generated at nominal voltage. With an active speed controller, surge current is not proportionate to the torque, but also depends on the supply voltage. As a result, this value only applies at nominal voltage.

Line 35 **Type of control**
"Speed" means that the drive is fitted with an integral speed controller. "Controlled" means that the drive is fitted with true commutation electronics.

Line 36 **Supply voltage** $+V_{CC}$ [V]
Range of supply voltages measured in respect of GND at which the drive functions.

Line 37 **Set speed value input** U_C [V]
Range of analog voltage for set speed value measured in respect of GND. For 2 wire solutions, the supply voltage acts as speed setting at the same time.

Line 38 **Scaling Set speed value input** k_c [rpm/V]
Set speed value n_c is based on the product $n_c = k_c \cdot U_c$.

Line 39 **Speed range**
Achievable speeds in the controlled range.

Line 40 **Max. acceleration**
The set speed value follows a sudden set point change with a ramp. This value indicates the increase in the ramp.

EC 6 ∅6 mm, brushless, 1.5 Watt

NEW

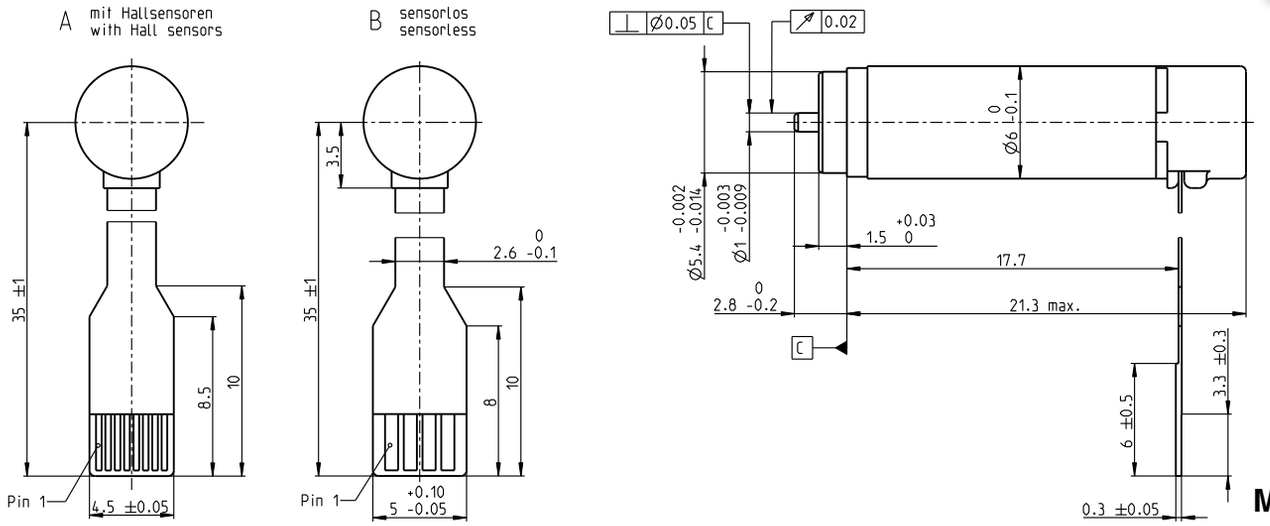

Stock program
Standard program
Special program (on request)

Part Numbers

A with Hall sensors	455020	468897
B sensorless	455019	468896

Motor Data (provisional)

	Values at nominal voltage			
1	Nominal voltage	V	6	12
2	No load speed	rpm	44600	34000
3	No load current	mA	38.6	13.5
4	Nominal speed	rpm	24300	13200
5	Nominal torque (max. continuous torque)	mNm	0.354	0.339
6	Nominal current (max. continuous current)	A	0.324	0.119
7	Stall torque	mNm	0.813	0.585
8	Starting current	A	0.673	0.187
9	Max. efficiency	%	59	54
	Characteristics			
10	Terminal resistance phase to phase	Ω	8.92	64
11	Terminal inductance phase to phase	mH	0.065	0.436
12	Torque constant	mNm/A	1.21	3.12
13	Speed constant	rpm/V	7900	3060
14	Speed/torque gradient	rpm/mNm	58300	62600
15	Mechanical time constant	ms	4.29	4.61
16	Rotor inertia	gcm²	0.00703	0.00703

Specifications

	Thermal data	
17	Thermal resistance housing-ambient	73.7 K/W
18	Thermal resistance winding-housing	5.6 K/W
19	Thermal time constant winding	0.564 s
20	Thermal time constant motor	78.9 s
21	Ambient temperature	-20...+100°C
22	Max. permissible winding temperature	+125°C
	Mechanical data (preloaded ball bearings)	
23	Max. permissible speed	100000 rpm
24	Axial play at axial load < 0.15 N	0 mm
	> 0.15 N	max. 0.06 mm
25	Radial play	preloaded
26	Max. axial load (dynamic)	0.1 N
27	Max. force for press fits (static)	10 N
28	Max. radial loading, 2 mm from flange	2 N
	Other specifications	
29	Number of pole pairs	1
30	Number of phases	3
31	Weight of motor	3 g

Values listed in the table are nominal.

Connection	**with hall sensors**	**sensorless**
Pin 1	Motor winding 1	Motor winding 1
Pin 2	Motor winding 2	Motor winding 2
Pin 3	Motor winding 3	Motor winding 3
Pin 4	V_{Hall} 3.8...24 VDC	N.C.
Pin 5	GND	
Pin 6	Hall sensor 1	
Pin 7	Hall sensor 2	
Pin 8	Hall sensor 3	
Connector	**Part number**	**Part number**
Molex	52745-0897	52207-0433
Molex		52089-0419
Tyco		84953-4
FCI	SFV8R-2STE1LF	

Pin for design with Hall sensors:
FPC, 8 pole, pitch 0.5 mm, top contact style
Wiring diagram for Hall sensors see page 33

Operating Range

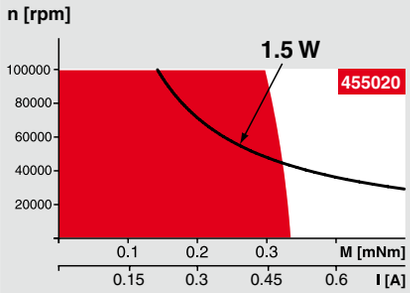

Comments

Continuous operation
In observation of above listed thermal resistance (lines 17 and 18) the maximum permissible winding temperature will be reached during continuous operation at 25°C ambient.
= Thermal limit.

Short term operation
The motor may be briefly overloaded (recurring).

Assigned power rating

maxon Modular System

Overview on page 20–25

Planetary Gearhead
∅6 mm
0.002 - 0.03 Nm
Page 242

Spindle Drive
∅6 mm
Page 293

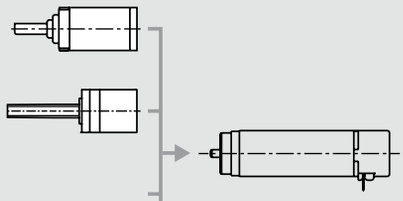

Recommended Electronics:

ESCON 36/3 EC	Page 342
ESCON Mod. 50/4 EC-S	343
DEC Module 24/2	346
Notes	**24**

EC 6 ∅6 mm, brushless, 2 Watt

NEW

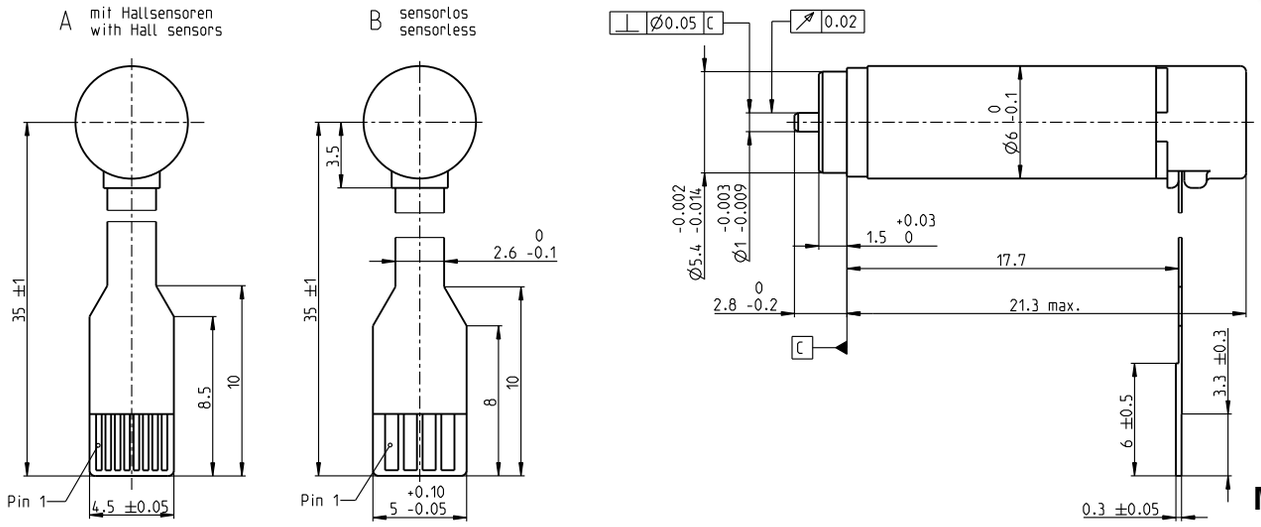

Stock program
Standard program
Special program (on request)

Part Numbers

A with Hall sensors	455417	455418	455419
B sensorless	455420	455421	455422

Motor Data (provisional)

	Values at nominal voltage				
1	Nominal voltage	V	3	6	12
2	No load speed	rpm	65400	55600	56300
3	No load current	mA	124	49.7	25.1
4	Nominal speed	rpm	37600	38200	41000
5	Nominal torque (max. continuous torque)	mNm	0.481	0.475	0.49
6	Nominal current (max. continuous current)	A	1.25	0.519	0.269
7	Stall torque	mNm	1.18	1.58	1.87
8	Starting current	A	2.82	1.58	0.947
9	Max. efficiency	%	63	68	71
	Characteristics				
10	Terminal resistance phase to phase	Ω	1.07	3.79	12.7
11	Terminal inductance phase to phase	mH	0.005	0.03	0.118
12	Torque constant	mNm/A	0.418	0.997	1.98
13	Speed constant	rpm/V	22800	9570	4830
14	Speed/torque gradient	rpm/mNm	58200	36400	30900
15	Mechanical time constant	ms	4.28	2.68	2.27
16	Rotor inertia	gcm^2	0.00703	0.00703	0.00703

Specifications

	Thermal data		
17	Thermal resistance housing-ambient		65.8 K/W
18	Thermal resistance winding-housing		13.2 K/W
19	Thermal time constant winding		1.34 s
20	Thermal time constant motor		70.4 s
21	Ambient temperature		-20...+100°C
22	Max. permissible winding temperature		+125°C
	Mechanical data (preloaded ball bearings)		
23	Max. permissible speed		100000 rpm
24	Axial play at axial load	< 0.15 N	0 mm
		> 0.15 N	max. 0.06 mm
25	Radial play		preloaded
26	Max. axial load (dynamic)		0.1 N
27	Max. force for press fits (static)		10 N
28	Max. radial loading, 2 mm from flange		2 N
	Other specifications		
29	Number of pole pairs		1
30	Number of phases		3
31	Weight of motor		3 g

Values listed in the table are nominal.

Connection	**with hall sensors**	**sensorless**
Pin 1	Motor winding 1	Motor winding 1
Pin 2	Motor winding 2	Motor winding 2
Pin 3	Motor winding 3	Motor winding 3
Pin 4	V_{Hall} 3.8...24 VDC	N.C.
Pin 5	GND	
Pin 6	Hall sensor 1	
Pin 7	Hall sensor 2	
Pin 8	Hall sensor 3	
Connector	**Part number**	**Part number**
Molex	52745-0897	52207-0433
Molex		52089-0419
Tyco		84953-4
FCI	SFV8R-2STE1LF	

Pin for design with Hall sensors:
FPC, 8 pole, pitch 0.5 mm, top contact style
Wiring diagram for Hall sensors see page 33

Operating Range

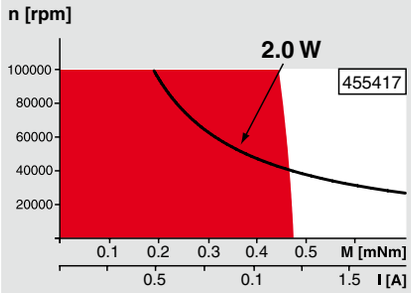

Comments

Continuous operation
In observation of above listed thermal resistance (lines 17 and 18) the maximum permissible winding temperature will be reached during continuous operation at 25°C ambient.
= Thermal limit.

Short term operation
The motor may be briefly overloaded (recurring).

Assigned power rating

maxon Modular System

Overview on page 20–25

Planetary Gearhead
∅6 mm
0.002 - 0.03 Nm
Page 242

Spindle Drive
∅6 mm
Page 293

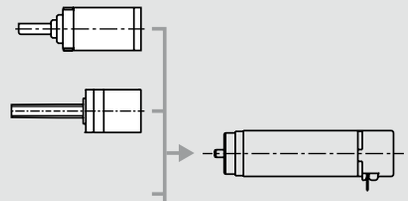

Recommended Electronics:

ESCON 36/3 EC	Page 342
ESCON Mod. 50/4 EC-S	343
DEC Module 24/2	346
Note	**24**

EC 8 ∅8 mm, brushless, 2 Watt

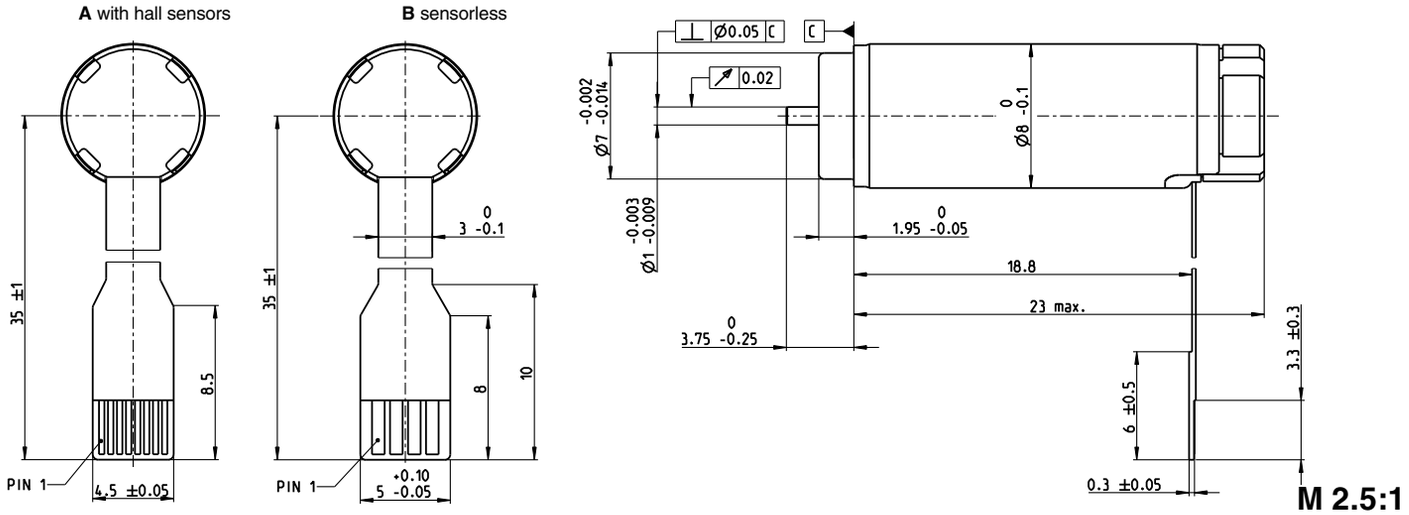

Stock program
Standard program
Special program (on request)

Part Numbers

A with Hall sensors	468334	468335	468336
B sensorless	468337	468338	468339

Motor Data

	Values at nominal voltage				
1	Nominal voltage	V	6	12	24
2	No load speed	rpm	35900	43800	42700
3	No load current	mA	69.2	46	22.1
4	Nominal speed	rpm	24000	32800	32000
5	Nominal torque (max. continuous torque)	mNm	0.977	0.942	0.944
6	Nominal current (max. continuous current)	A	0.691	0.41	0.2
7	Stall torque	mNm	3.05	3.9	3.93
8	Starting current	A	1.98	1.54	0.755
9	Max. efficiency	%	67	69	70
	Characteristics				
10	Terminal resistance phase to phase	Ω	3.02	7.8	31.8
11	Terminal inductance phase to phase	mH	0.039	0.106	0.447
12	Torque constant	mNm/A	1.54	2.53	5.21
13	Speed constant	rpm/V	6200	3770	1830
14	Speed/torque gradient	rpm/mNm	12200	11600	11200
15	Mechanical time constant	ms	3.19	3.03	2.92
16	Rotor inertia	gcm²	0.024961	0.024961	0.024961

Specifications

	Thermal data		
17	Thermal resistance housing-ambient		51.2 K/W
18	Thermal resistance winding-housing		3.5 K/W
19	Thermal time constant winding		0.832 s
20	Thermal time constant motor		154 s
21	Ambient temperature		-20…+100°C
22	Max. permissible winding temperature		125°C
	Mechanical data (preloaded ball bearings)		
23	Max. permissible speed		80000 rpm
24	Axial play at axial load	< 0.15 N	0 mm
		> 0.15 N	max. 0.06 mm
25	Radial play		preloaded
26	Max. axial load (dynamic)		0.1 N
27	Max. force for press fits (static)		10 N
28	Max. radial loading, 2 mm from flange		2 N
	Other specifications		
29	Number of pole pairs		1
30	Number of phases		3
31	Weight of motor		6 g

Values listed in the table are nominal.

Connection	**with hall sensors**	**sensorless**
Pin 1	Motor winding 1	Motor winding 1
Pin 2	Motor winding 2	Motor winding 2
Pin 3	Motor winding 3	Motor winding 3
Pin 4	V_{Hall} 3.8...24 VDC	N.C.
Pin 5	GND	
Pin 6	Hall sensor 1	
Pin 7	Hall sensor 2	
Pin 8	Hall sensor 3	
Connector	**Part number**	**Part number**
Molex	52745-0897	52207-0433
Molex		52089-0419
Tyco		84953-4

Pin for design with Hall sensors:
FPC, 8 pole, pitch 0.5 mm, top contact style
Wiring diagram for Hall sensors see page 33

Operating Range

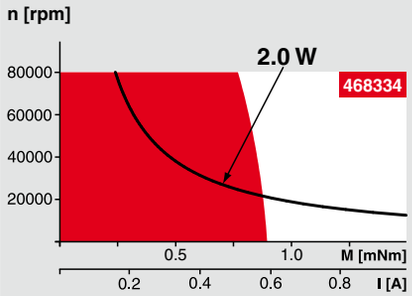

Comments

Continuous operation
In observation of above listed thermal resistance (lines 17 and 18) the maximum permissible winding temperature will be reached during continuous operation at 25°C ambient.
= Thermal limit.

Short term operation
The motor may be briefly overloaded (recurring).

Assigned power rating

maxon Modular System

Overview on page 20–25

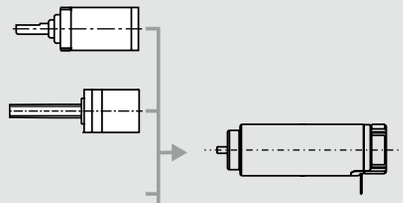

Planetary Gearhead
∅8 mm
0.01 - 0.1 Nm
Page 243

Spindle Drive
∅8 mm
Page 294–295

Recommended Electronics:

ESCON 36/3 EC	Page 342
ESCON Mod. 50/4 EC-S	343
DEC Module 24/2	346
Notes	**24**

EC 10 ∅10 mm, brushless, 8 Watt

A with Hall sensors **B** sensorless

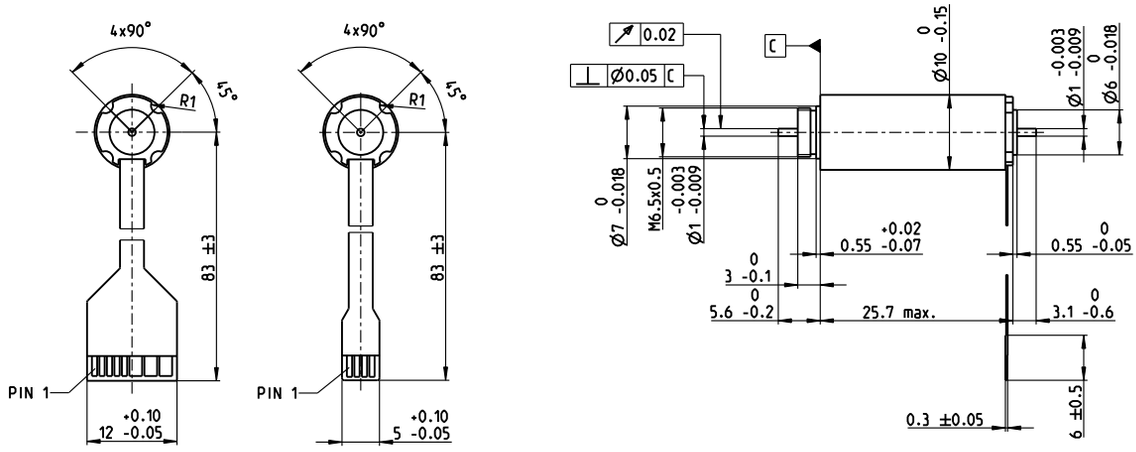

M 1:1

Stock program
Standard program
Special program (on request)

Part Numbers

A with Hall sensors	315170	315171	315172	315173
B sensorless	315174	315175	315176	315177

Motor Data

	Values at nominal voltage					
1	Nominal voltage	V	6	9	12	18
2	No load speed	rpm	49200	52500	53200	57100
3	No load current	mA	160	118	90.4	67.3
4	Nominal speed	rpm	41700	45600	46600	50900
5	Nominal torque (max. continuous torque)	mNm	1.74	1.63	1.62	1.61
6	Nominal current (max. continuous current)	A	1.66	1.11	0.843	0.6
7	Stall torque	mNm	12	13	13.7	15.6
8	Starting current	A	10.4	8.05	6.46	5.27
9	Max. efficiency	%	77	78	78	79
	Characteristics					
10	Terminal resistance phase to phase	Ω	0.575	1.12	1.86	3.42
11	Terminal inductance phase to phase	mH	0.00998	0.0198	0.0342	0.0671
12	Torque constant	mNm/A	1.15	1.61	2.12	2.97
13	Speed constant	rpm/V	8340	5920	4500	3220
14	Speed/torque gradient	rpm/mNm	4180	4110	3940	3700
15	Mechanical time constant	ms	3.03	2.97	2.85	2.68
16	Rotor inertia	gcm^2	0.0691	0.0691	0.0691	0.0691

Specifications

	Thermal data	
17	Thermal resistance housing-ambient	39.8 K/W
18	Thermal resistance winding-housing	5.1 K/W
19	Thermal time constant winding	1.51 s
20	Thermal time constant motor	221 s
21	Ambient temperature	-40…+100°C
22	Max. permissible winding temperature	+125°C
	Mechanical data (preloaded ball bearings)	
23	Max. permissible speed	65000 rpm
24	Axial play at axial load < 1.0 N	0 mm
	> 1.0 N	max. 0.14 mm
25	Radial play	preloaded
26	Max. axial load (dynamic)	0.8 N
27	Max. force for press fits (static)	12 N
	(static, shaft supported)	250 N
28	Max. radial loading, 5 mm from flange	2 N
	Other specifications	
29	Number of pole pairs	1
30	Number of phases	3
31	Weight of motor	13 g

Values listed in the table are nominal.

Connection	**with Hall sensors**	**sensorless**
Pin 1	V_{Hall} 4.5…24 VDC	Motor winding 1
Pin 2	Hall sensor 3	Motor winding 2
Pin 3	Hall sensor 1	Motor winding 3
Pin 4	Hall sensor 2	N.C.
Pin 5	GND	
Pin 6	Motor winding 3	
Pin 7	Motor winding 2	
Pin 8	Motor winding 1	
Adapter	**Part number**	**Part number**
see p. 362	220300	220310
Connector	**Part number**	**Part number**
Tyco	1-84953-1	84953-4
Molex	52207-1133	52207-0433
Molex	52089-1119	52089-0419

Pin for design with Hall sensors:
FPC, 11-pol, Pitch 1.0 mm, top contact style

Operating Range

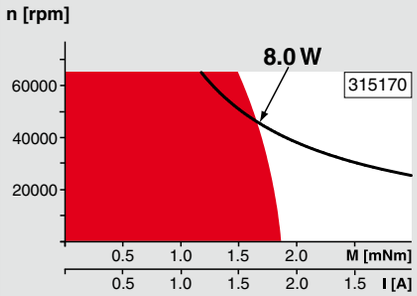

Comments

Continuous operation
In observation of above listed thermal resistance (lines 17 and 18) the maximum permissible winding temperature will be reached during continuous operation at 25°C ambient.
= Thermal limit.

Short term operation
The motor may be briefly overloaded (recurring).

Assigned power rating

maxon Modular System

Overview on page 20–25

Planetary Gearhead
∅10 mm
0.01 - 0.15 Nm
Page 245

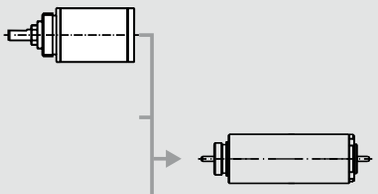

Recommended Electronics:

ESCON 36/3 EC	Page 342
ESCON Mod. 50/4 EC-S	343
ESCON Module 50/5	343
ESCON 50/5	344
DEC Module 24/2	346
DEC Module 50/5	346
Notes	**24**

EC 13 ∅13 mm, brushless, 6 Watt

A with Hall sensors

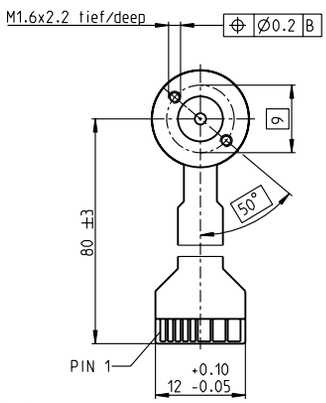

B sensorless

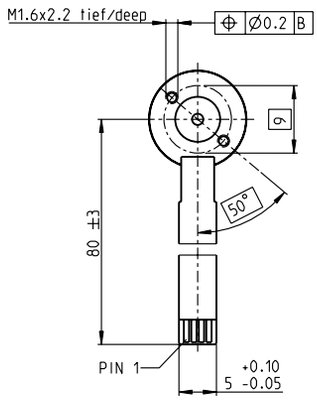

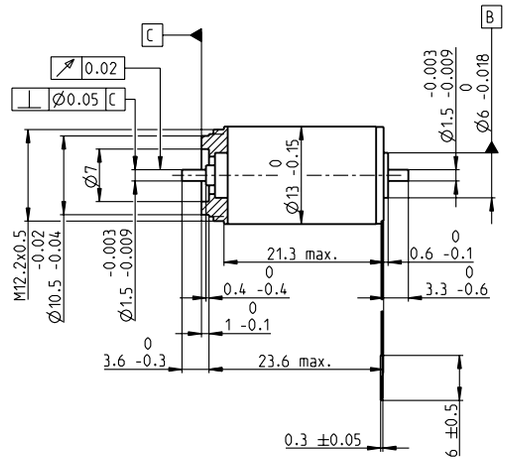

M 1:1

Stock program
Standard program
Special program (on request)

Part Numbers

A with Hall sensors	416184	430152	430153	430154	**430155**
B sensorless	426333	430156	430157	430158	**430159**

Motor Data

	Values at nominal voltage						
1	Nominal voltage	V	6	9	12	18	24
2	No load speed	rpm	28800	30600	27500	27900	27700
3	No load current	mA	168	121	78.6	53.5	39.8
4	Nominal speed	rpm	20200	22700	19500	19700	19400
5	Nominal torque (max. continuous torque)	mNm	2.23	2.36	2.32	2.24	2.21
6	Nominal current (max. continuous current)	A	1.31	0.976	0.646	0.425	0.312
7	Stall torque	mNm	7.79	9.53	8.27	8	7.72
8	Starting current	A	4.08	3.52	2.06	1.35	0.973
9	Max. efficiency	%	64	67	65	65	64
	Characteristics						
10	Terminal resistance phase to phase	Ω	1.47	2.56	5.82	13.3	24.7
11	Terminal inductance phase to phase	mH	0.021	0.042	0.091	0.198	0.357
12	Torque constant	mNm/A	1.91	2.71	4.01	5.92	7.94
13	Speed constant	rpm/V	5000	3520	2380	1610	1200
14	Speed/torque gradient	rpm/mNm	3850	3330	3460	3630	3740
15	Mechanical time constant	ms	7.83	6.76	7.02	7.38	7.59
16	Rotor inertia	gcm²	0.194	0.194	0.194	0.194	0.194

Specifications

Thermal data

17	Thermal resistance housing-ambient	32 K/W
18	Thermal resistance winding-housing	2.46 K/W
19	Thermal time constant winding	0.72 s
20	Thermal time constant motor	188 s
21	Ambient temperature	-40…+100°C
22	Max. permissible winding temperature	+155°C

Mechanical data (preloaded ball bearings)

23	Max. permissible speed		50 000 rpm
24	Axial play at axial load	< 1.5 N	0 mm
		> 1.5 N	max. 0.05 mm
25	Radial play		preloaded
26	Max. axial load (dynamic)		1 N
27	Max. force for press fits (static)		18 N
	(static, shaft supported)		250 N
28	Max. radial loading, 5 mm from flange		4 N

Other specifications

29	Number of pole pairs	1
30	Number of phases	3
31	Weight of motor	19 g

Values listed in the table are nominal.

Connection	**with Hall sensors**	**sensorless**
Pin 1	V_{Hall} 4.5…24 VDC	Motor winding 1
Pin 2	Hall sensor 3	Motor winding 2
Pin 3	Hall sensor 1	Motor winding 3
Pin 4	Hall sensor 2	N.C.
Pin 5	GND	
Pin 6	Motor winding 3	
Pin 7	Motor winding 2	
Pin 8	Motor winding 1	
Adapter	**Part number**	**Part number**
see p. 362	220300	220310
Connector	**Part number**	**Part number**
Tyco	1-84953-1	84953-4
Molex	52207-1133	52207-0433
Molex	52089-1119	52089-0419

Pin for design with Hall sensors:
FPC, 11-pol, Pitch 1.0 mm, top contact style

Operating Range

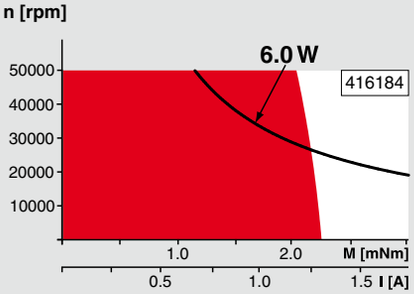

Comments

Continuous operation
In observation of above listed thermal resistance (lines 17 and 18) the maximum permissible winding temperature will be reached during continuous operation at 25°C ambient.
= Thermal limit.

Short term operation
The motor may be briefly overloaded (recurring).

Assigned power rating

maxon Modular System

Overview on page 20–25

Planetary Gearhead
∅13 mm
0.2 - 0.35 Nm
Page 248

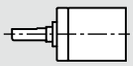

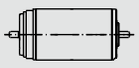

Recommended Electronics:

ESCON 36/3 EC	Page 342
ESCON Mod. 50/4 EC-S	343
ESCON Module 50/5	343
ESCON 50/5	344
DEC Module 24/2	346
DEC Module 50/5	346
Notes	**24**

EC 13 ∅13 mm, brushless, 12 Watt

A with Hall sensors

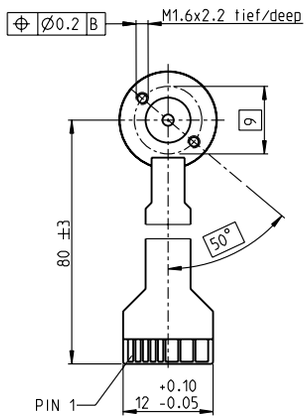

B sensorless

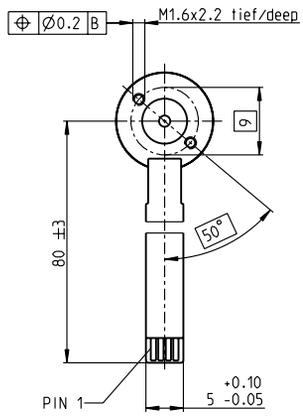

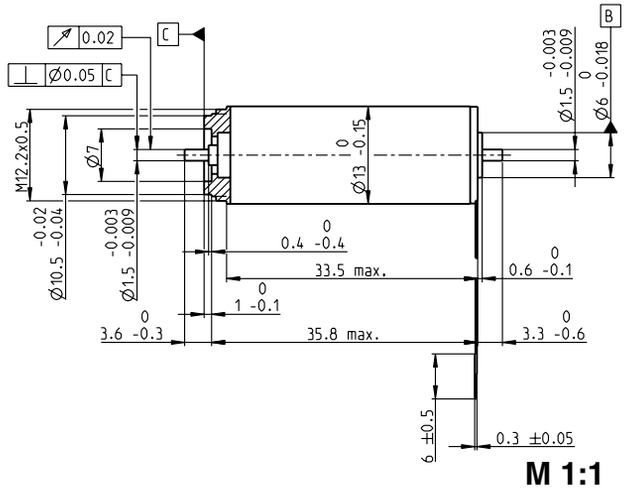

M 1:1

Stock program
Standard program
Special program (on request)

Part Numbers

A with Hall sensors	426397	430160	430161	430162	**430163**	430164
B sensorless	426576	430166	430167	430168	**430169**	430170

Motor Data

	Values at nominal voltage							
1	Nominal voltage	V	6	9	12	18	24	36
2	No load speed	rpm	24100	24200	24100	24900	24100	26600
3	No load current	mA	198	132	98.9	68.9	49.5	38.2
4	Nominal speed	rpm	18200	19100	18800	20000	19000	21700
5	Nominal torque (max. continuous torque)	mNm	5.15	5.64	5.13	5.53	5.18	5.38
6	Nominal current (max. continuous current)	A	2.37	1.72	1.18	0.871	0.598	0.456
7	Stall torque	mNm	21.7	27.4	23.8	28.8	24.8	30.3
8	Starting current	A	9.31	7.85	5.1	4.24	2.67	2.38
9	Max. efficiency	%	74	76	75	77	75	77
	Characteristics							
10	Terminal resistance phase to phase	Ω	0.644	1.15	2.35	4.24	9	15.1
11	Terminal inductance phase to phase	mH	0.0103	0.0233	0.0413	0.0879	0.165	0.308
12	Torque constant	mNm/A	2.33	3.49	4.66	6.8	9.32	12.7
13	Speed constant	rpm/V	4100	2730	2050	1410	1020	751
14	Speed/torque gradient	rpm/mNm	1130	896	1030	877	990	893
15	Mechanical time constant	ms	3.86	3.05	3.52	2.99	3.37	3.04
16	Rotor inertia	gcm^2	0.325	0.325	0.325	0.325	0.325	0.325

Specifications

	Thermal data		
17	Thermal resistance housing-ambient		23.9 K/W
18	Thermal resistance winding-housing		1.26 K/W
19	Thermal time constant winding		0.603 s
20	Thermal time constant motor		263 s
21	Ambient temperature		-40…+100°C
22	Max. permissible winding temperature		+155°C
	Mechanical data (preloaded ball bearings)		
23	Max. permissible speed		50000 rpm
24	Axial play at axial load	< 1.5 N	0 mm
		> 1.5 N	max. 0.05 mm
25	Radial play		preloaded
26	Max. axial load (dynamic)		0.8 N
27	Max. force for press fits (static)		18 N
	(static, shaft supported)		250 N
28	Max. radial loading, 5 mm from flange		4 N
	Other specifications		
29	Number of pole pairs		1
30	Number of phases		3
31	Weight of motor		29 g

Connection	**with Hall sensors**	**sensorless**
Pin 1	V_{Hall} 4.5…24 VDC	Motor winding 1
Pin 2	Hall sensor 3	Motor winding 2
Pin 3	Hall sensor 1	Motor winding 3
Pin 4	Hall sensor 2	N.C.
Pin 5	GND	
Pin 6	Motor winding 3	
Pin 7	Motor winding 2	
Pin 8	Motor winding 1	
Adapter	**Part number**	**Part number**
see p. 362	220300	220310
Connector	**Part number**	**Part number**
Tyco	1-84953-1	84953-4
Molex	52207-1133	52207-0433
Molex	52089-1119	52089-0419

Pin for design with Hall sensors:
FPC, 11-pol, Pitch 1.0 mm, top contact style

Operating Range

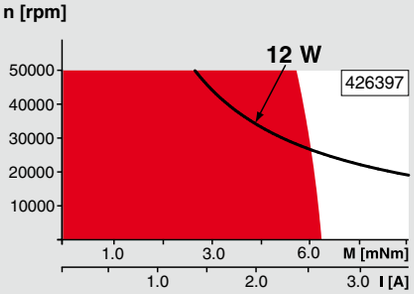

Comments

Continuous operation
In observation of above listed thermal resistance (lines 17 and 18) the maximum permissible winding temperature will be reached during continuous operation at 25°C ambient.
= Thermal limit.

Short term operation
The motor may be briefly overloaded (recurring).

Assigned power rating

maxon Modular System

Overview on page 20–25

Planetary Gearhead
∅13 mm
0.2 - 0.35 Nm
Page 248

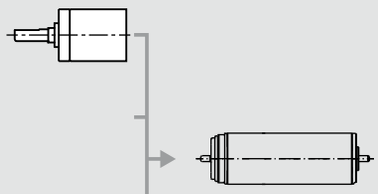

Recommended Electronics:

ESCON 36/3 EC	Page 342
ESCON Mod. 50/4 EC-S	343
ESCON Module 50/5	343
ESCON 50/5	344
DEC Module 24/2	346
DEC Module 50/5	346
Notes	**24**

EC 13 ∅13 mm, brushless, 30 Watt

sterilizable

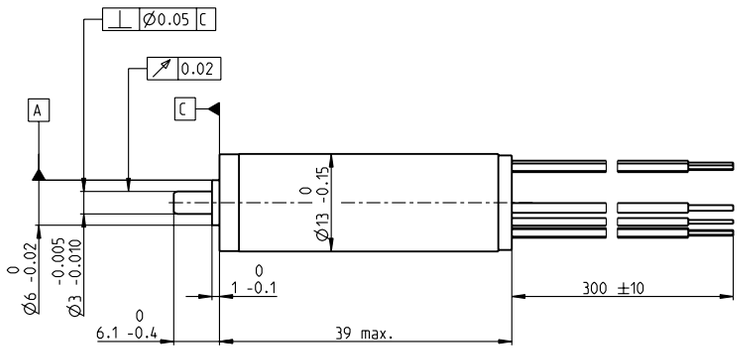

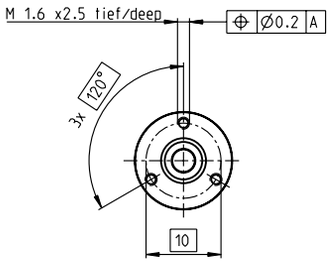

M 1:1

Stock program
Standard program
Special program (on request)

Part Numbers

A with Hall sensors	448825	448826	448827
B sensorless	448831	448832	448833

Motor Data (provisional)

	Values at nominal voltage				
1	Nominal voltage	V	12	24	48
2	No load speed	rpm	65300	65300	76000
3	No load current	mA	171	85.5	53.9
4	Nominal speed	rpm	59100	59400	70200
5	Nominal torque (max. continuous torque)	mNm	5	4.99	4.47
6	Nominal current (max. continuous current)	A	2.99	1.49	0.788
7	Stall torque	mNm	60.2	64.3	68.2
8	Starting current	A	34.5	18.4	11.4
9	Max. efficiency	%	87	87	87
	Characteristics				
10	Terminal resistance phase to phase	Ω	0.348	1.3	4.22
11	Terminal inductance phase to phase	mH	0.018	0.072	0.213
12	Torque constant	mNm/A	1.75	3.49	6
13	Speed constant	rpm/V	5470	2740	1590
14	Speed/torque gradient	rpm/mNm	1090	1020	1120
15	Mechanical time constant	ms	1.63	1.53	1.68
16	Rotor inertia	gcm²	0.143	0.143	0.143

Specifications

	Thermal data	
17	Thermal resistance housing-ambient	20.7 K/W
18	Thermal resistance winding-housing	2.58 K/W
19	Thermal time constant winding	1.87 s
20	Thermal time constant motor	391 s
21	Ambient temperature	-40…+135°C
22	Max. permissible winding temperature	+155°C
	Mechanical data (preloaded ball bearings)	
23	Max. permissible speed	90000 rpm
24	Axial play at axial load < 7 N	0 mm
	> 7 N	max. 0.1 mm
25	Radial play	preloaded
26	Max. axial load (dynamic)	6 N
27	Max. force for press fits (static)	10 N
28	Max. radial loading, 5 mm from flange	4 N
	Other specifications	
29	Number of pole pairs	1
30	Number of phases	3
31	Weight of motor	37.8 g

Alignment of the electronic connections not specified.

Values listed in the table are nominal.

Connection A and B, motor (cable AWG 22)

red	Motor winding 1
black	Motor winding 2
white	Motor winding 3

Connection A, sensors (cable AWG 26)

green	V_{Hall} 3.8...24 VDC
blue	GND
red/grey	Hall sensor 1
black/grey	Hall sensor 2
white/grey	Hall sensor 3

Option: Inch-version size 5 available as standard version.

Operating Range

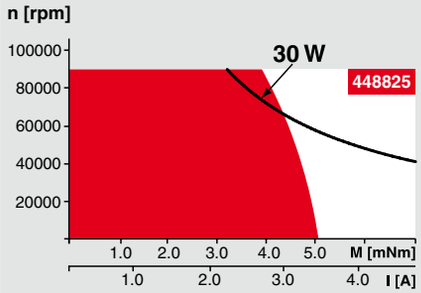

Comments

Continuous operation
In observation of above listed thermal resistance (lines 17 and 18) the maximum permissible winding temperature will be reached during continuous operation at 25°C ambient.
= Thermal limit.

Short term operation
The motor may be briefly overloaded (recurring).

Assigned power rating

Application

135°C

Sterilizable Devices

Saws
Surgical Reamers
Arthroscopic Shavers
Surgical Staplers
Dental Tools

Sterilization information

Tested for 1000 sterilization cycles in an autoclave.
No need to dismantle.

Sterilization with steam	
Temperature	+134°C ± 4°C
Compression pressure up to	2.3 bar
Rel. humidity	100 %
Cycle length	18 minutes

maxon modular system

Overview on page 20–25

Planetary Gearhead
sterilizable
∅13 mm
0.05 - 0.275 Nm
Page 249

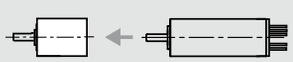

Recommended Electronics:

ESCON 36/3 EC	Page 342
ESCON Mod. 50/4 EC-S	343
ESCON Module 50/5	343
ESCON 50/5	344
DEC Module 24/2	346
DEC Module 50/5	346
Notes	**24**

Choke may be required

EC 13 ∅13 mm, brushless, 50 Watt

sterilizable

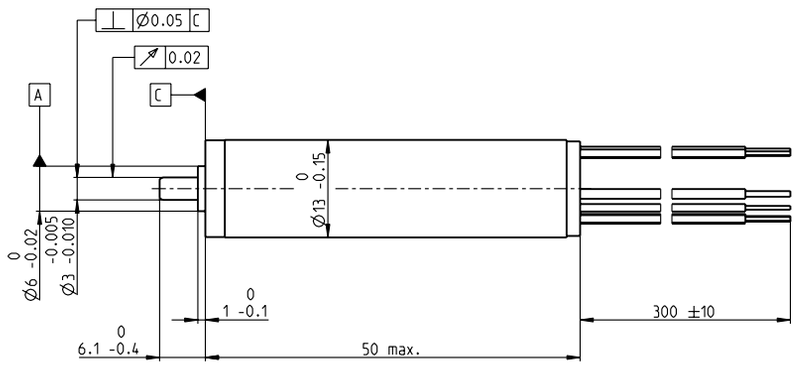

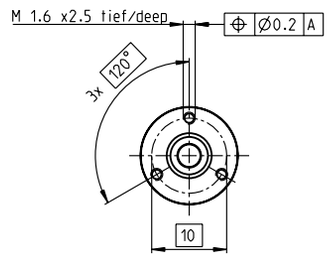

M 1:1

Stock program
Standard program
Special program (on request)

Part Numbers

A with Hall sensors	448828	448829	448830
B sensorless	448834	448835	448836

Motor Data (provisional)

	Values at nominal voltage				
1	Nominal voltage	V	12	24	48
2	No load speed	rpm	73400	73400	73500
3	No load current	mA	270	135	67.6
4	Nominal speed	rpm	68000	68800	69000
5	Nominal torque (max. continuous torque)	mNm	7.76	8.05	8.04
6	Nominal current (max. continuous current)	A	5.2	2.69	1.34
7	Stall torque	mNm	120	151	158
8	Starting current	A	77.3	48.6	25.5
9	Max. efficiency	%	89	90	90
	Characteristics				
10	Terminal resistance phase to phase	Ω	0.155	0.494	1.89
11	Terminal inductance phase to phase	mH	0.00676	0.027	0.108
12	Torque constant	mNm/A	1.55	3.11	6.22
13	Speed constant	rpm/V	6140	3070	1540
14	Speed/torque gradient	rpm/mNm	613	488	465
15	Mechanical time constant	ms	2.31	1.84	1.75
16	Rotor inertia	gcm^2	0.36	0.36	0.36

Specifications

	Thermal data	
17	Thermal resistance housing-ambient	17.9 K/W
18	Thermal resistance winding-housing	0.703 K/W
19	Thermal time constant winding	0.693 s
20	Thermal time constant motor	394 s
21	Ambient temperature	-40…+135°C
22	Max. permissible winding temperature	+155°C
	Mechanical data (preloaded ball bearings)	
23	Max. permissible speed	90000 rpm
24	Axial play at axial load < 7 N	0 mm
	> 7 N	max. 0.85 mm
25	Radial play	preloaded
26	Max. axial load (dynamic)	6 N
27	Max. force for press fits (static)	7 N
28	Max. radial loading, 5 mm from flange	4 N
	Other specifications	
29	Number of pole pairs	1
30	Number of phases	3
31	Weight of motor	44 g

Alignment of the electronic connections not specified.

Values listed in the table are nominal.

Connection A and B, motor (cable AWG 22)

red	Motor winding 1
black	Motor winding 2
white	Motor winding 3

Connection A, sensors (cable AWG 26)

green	V_{Hall} 3.8...24 VDC
blue	GND
red/grey	Hall sensor 1
black/grey	Hall sensor 2
white/grey	Hall sensor 3

Option: Inch-version size 5 available as standard version.

Operating Range

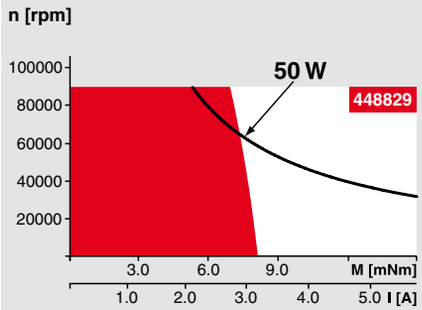

Comments

Continuous operation
In observation of above listed thermal resistance (lines 17 and 18) the maximum permissible winding temperature will be reached during continuous operation at 25°C ambient.
= Thermal limit.

Short term operation
The motor may be briefly overloaded (recurring).

Assigned power rating

Application

135°C **Sterilizable Devices**

Saws
Surgical Reamers
Arthroscopic Shavers
Surgical Staplers
Dental Tools

Sterilization information

Tested for 1000 sterilization cycles in an autoclave.
No need to dismantle.

Sterilization with steam	
Temperature	+134°C ± 4°C
Compression pressure up to	2.3 bar
Rel. humidity	100 %
Cycle length	18 minutes

maxon Modular System

Overview on page 20–25

Planetary Gearhead
sterilizable
∅13 mm
0.05 - 0.275 Nm
Page 249

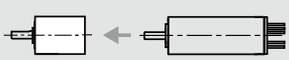

Recommended Electronics:

ESCON 36/3 EC	Page 342
ESCON Mod. 50/4 EC-S	343
ESCON Module 50/5	343
ESCON 50/5	344
DEC Module 24/2	346
DEC Module 50/5	346
Notes	**24**

Choke may be required

EC 16 ∅16 mm, brushless, 30 Watt

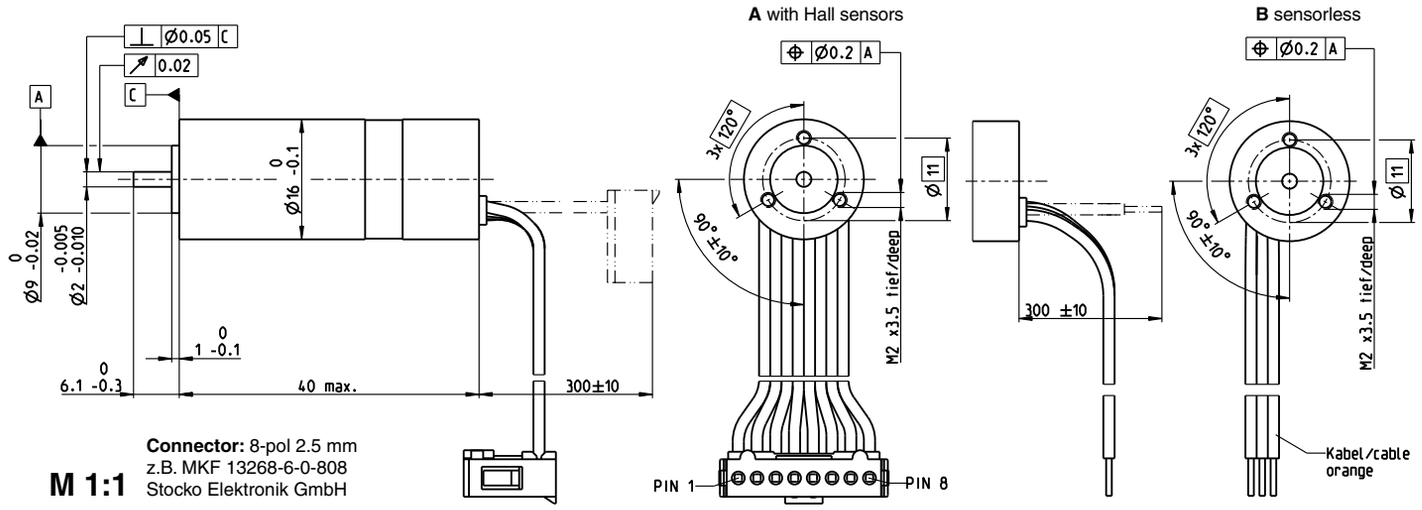

M 1:1

Connector: 8-pol 2.5 mm
z.B. MKF 13268-6-0-808
Stocko Elektronik GmbH

Stock program
Standard program
Special program (on request)

Part Numbers

A with Hall sensors	400160	405812	**400161**	405813	400162
B sensorless	404079	405817	**404080**	405818	404081

Motor Data

	Values at nominal voltage						
1	Nominal voltage	V	12	18	24	36	48
2	No load speed	rpm	44500	42200	42800	45800	39600
3	No load current	mA	397	241	185	139	80.8
4	Nominal speed	rpm	39300	37400	38100	41100	34800
5	Nominal torque (max. continuous torque)	mNm	7.85	8.01	8.09	7.56	7.87
6	Nominal current (max. continuous current)	A	3.41	2.18	1.68	1.14	0.754
7	Stall torque	mNm	75.5	78	82.7	82.3	72.5
8	Starting current	A	29.8	19.4	15.6	11.1	6.35
9	Max. efficiency	%	79	80	80	80	79
	Characteristics						
10	Terminal resistance phase to phase	Ω	0.403	0.928	1.53	3.24	7.56
11	Terminal inductance phase to phase	mH	0.0235	0.059	0.102	0.2	0.477
12	Torque constant	mNm/A	2.54	4.02	5.29	7.4	11.4
13	Speed constant	rpm/V	3760	2380	1810	1290	836
14	Speed/torque gradient	rpm/mNm	598	549	524	565	554
15	Mechanical time constant	ms	4.54	4.17	3.98	4.29	4.21
16	Rotor inertia	gcm²	0.725	0.725	0.725	0.725	0.725

Specifications

	Thermal data	
17	Thermal resistance housing-ambient	16.3 K/W
18	Thermal resistance winding-housing	1.68 K/W
19	Thermal time constant winding	1.97 s
20	Thermal time constant motor	240 s
21	Ambient temperature	-20…+100°C
22	Max. permissible winding temperature	+155°C
	Mechanical data (preloaded ball bearings)	
23	Max. permissible speed	70000 rpm
24	Axial play at axial load < 3.5 N	0 mm
	> 3.5 N	max. 0.14 mm
25	Radial play	preloaded
26	Max. axial load (dynamic)	3 N
27	Max. force for press fits (static)	35 N
	(static, shaft supported)	250 N
28	Max. radial loading, 5 mm from flange	10 N
	Other specifications	
29	Number of pole pairs	1
30	Number of phases	3
31	Weight of motor	34 g

Values listed in the table are nominal.

Connection A

brown	Motor winding 1	Pin 1
red	Motor winding 2	Pin 2
orange	Motor winding 3	Pin 3
yellow	V_{Hall} 3…24 VDC	Pin 4
green	GND	Pin 5
blue	Hall sensor 1	Pin 6
violet	Hall sensor 2	Pin 7
grey	Hall sensor 3	Pin 8

Wiring diagram for Hall sensors see p. 33

Connection B (Cable AWG 24)

brown	Motor winding 1
red	Motor winding 2
orange	Motor winding 3

Operating Range

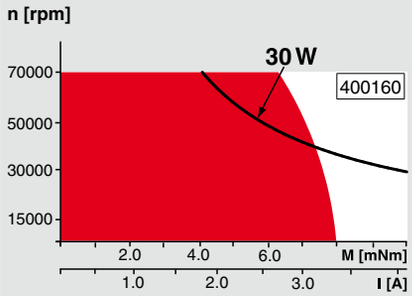

Comments

Continuous operation
In observation of above listed thermal resistance (lines 17 and 18) the maximum permissible winding temperature will be reached during continuous operation at 25°C ambient.
= Thermal limit.

Short term operation
The motor may be briefly overloaded (recurring).

Assigned power rating

maxon Modular System

Overview on page 20–25

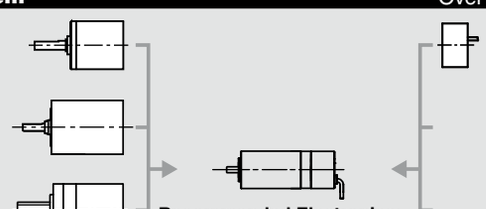

Planetary Gearhead
∅16 mm
0.1 - 0.6 Nm
Page 254/255

Planetary Gearhead
∅22 mm
0.5 - 1.0 Nm
Page 262

Spindle Drive
∅16 mm
Page 296–298

Recommended Electronics:

ESCON 36/3 EC	Page 342
ESCON Mod. 50/4 EC-S	343
ESCON Module 50/5	343
ESCON 50/5	344
DEC Module 24/2, 50/5	346
EPOS2 24/2, Module 36/2	350
EPOS2 24/5, EPOS2 50/5	351
EPOS2 P 24/5	354
EPOS3 70/10 EtherCAT	357
MAXPOS 50/5	360
Notes	**24**

for type A:
Encoder MR
128/256/512 CPT,
Page 318

EC 16 ∅16 mm, brushless, 30 Watt

sterilizable

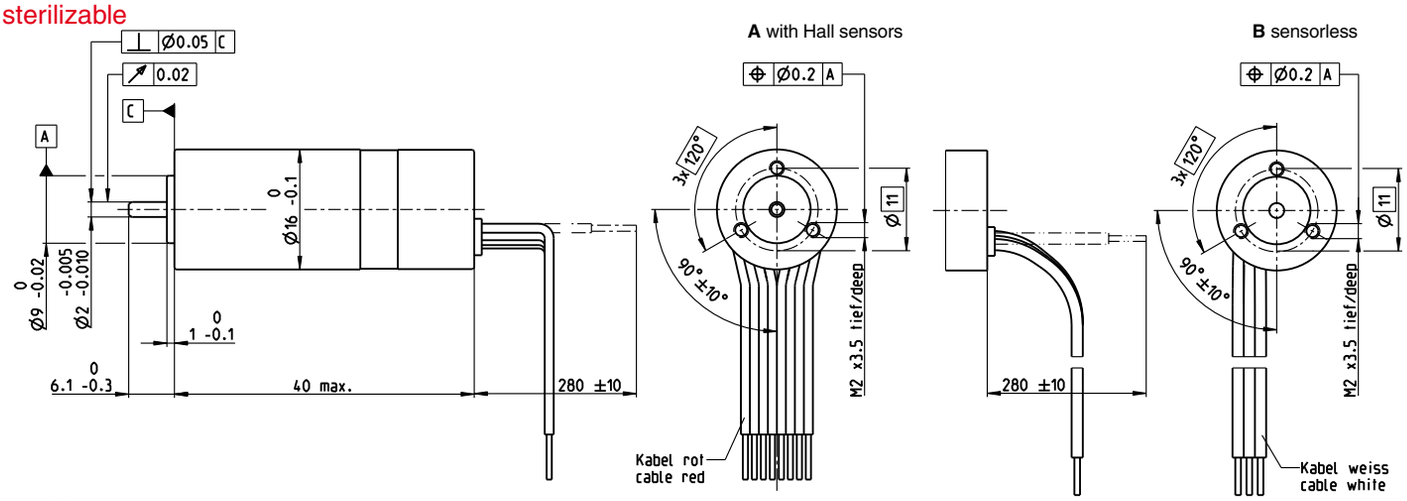

M 1:1

Stock program
Standard program
Special program (on request)

Part Numbers

A with Hall sensors	405146	405147
B sensorless	405149	405150

Motor Data

	Values at nominal voltage			
1	Nominal voltage	V	12	24
2	No load speed	rpm	47800	45900
3	No load current	mA	323	153
4	Nominal speed	rpm	42100	40800
5	Nominal torque (max. continuous torque)	mNm	7.66	7.85
6	Nominal current (max. continuous current)	A	3.51	1.72
7	Stall torque	mNm	70.6	77.3
8	Starting current	A	29.8	15.6
9	Max. efficiency	%	81	81
	Characteristics			
10	Terminal resistance phase to phase	Ω	0.403	1.53
11	Terminal inductance phase to phase	mH	0.0168	0.0729
12	Torque constant	mNm/A	2.37	4.94
13	Speed constant	rpm/V	4030	1930
14	Speed/torque gradient	rpm/mNm	685	601
15	Mechanical time constant	ms	5.2	4.56
16	Rotor inertia	gcm^2	0.725	0.725

Specifications

	Thermal data	
17	Thermal resistance housing-ambient	16.3 K/W
18	Thermal resistance winding-housing	1.68 K/W
19	Thermal time constant winding	1.97 s
20	Thermal time constant motor	240 s
21	Ambient temperature	-40…+135°C
22	Max. permissible winding temperature	155°C
	Mechanical data (preloaded ball bearings)	
23	Max. permissible speed	70000 rpm
24	Axial play at axial load < 3.5 N	0 mm
	> 3.5 N	max. 0.14 mm
25	Radial play	preloaded
26	Max. axial load (dynamic)	3 N
27	Max. force for press fits (static)	43 N
	(static, shaft supported)	250 N
28	Max. radial loading, 5 mm from flange	10 N
	Other specifications	
29	Number of pole pairs	1
30	Number of phases	3
31	Weight of motor	34 g

Values listed in the table are nominal.

Connection A and B, motor (Cable AWG 22)

red	Motor winding 1
black	Motor winding 2
white	Motor winding 3

Connection A, sensors (Cable AWG 26)

green	V_{Hall} 3…24 VDC
blue	GND
red/grey	Hall sensor 1
black/grey	Hall sensor 2
white/grey	Hall sensor 3

Wiring diagram for Hall sensors see p. 33

Operating Range

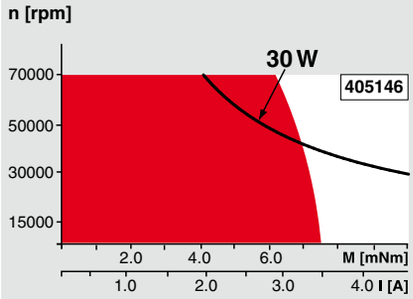

Comments

Continuous operation
In observation of above listed thermal resistance (lines 17 and 18) the maximum permissible winding temperature will be reached during continuous operation at 25°C ambient.
= Thermal limit.

Short term operation
The motor may be briefly overloaded (recurring).

Assigned power rating

Application

135°C **Sterilizable Devices**

- Orthopedic Drills & Saws
- Surgical Reamers
- Arthroscopic Shavers
- Surgical Staplers
- Dental Tools

Sterilization information

Tested for 100 sterilization cycles in an autoclave.
No need to dismantle.

Sterilization with steam	
Temperature	+134°C ± 4°C
Compression pressure up to	2.3 bar
Rel. humidity	100 %
Cycle length	18 minutes

maxon modular system

Overview on page 20–25

Planetary Gearhead
sterilizable
∅16 mm
0.1 - 0.3 Nm
Page 256

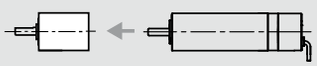

Recommended Electronics:

ESCON 36/3 EC	Page 342
ESCON Mod. 50/4 EC-S	343
ESCON Module 50/5	343
ESCON 50/5	344
DEC Module 24/2	346
DEC Module 50/5	346
Notes	**24**

EC 16 ∅16 mm, brushless, 60 Watt

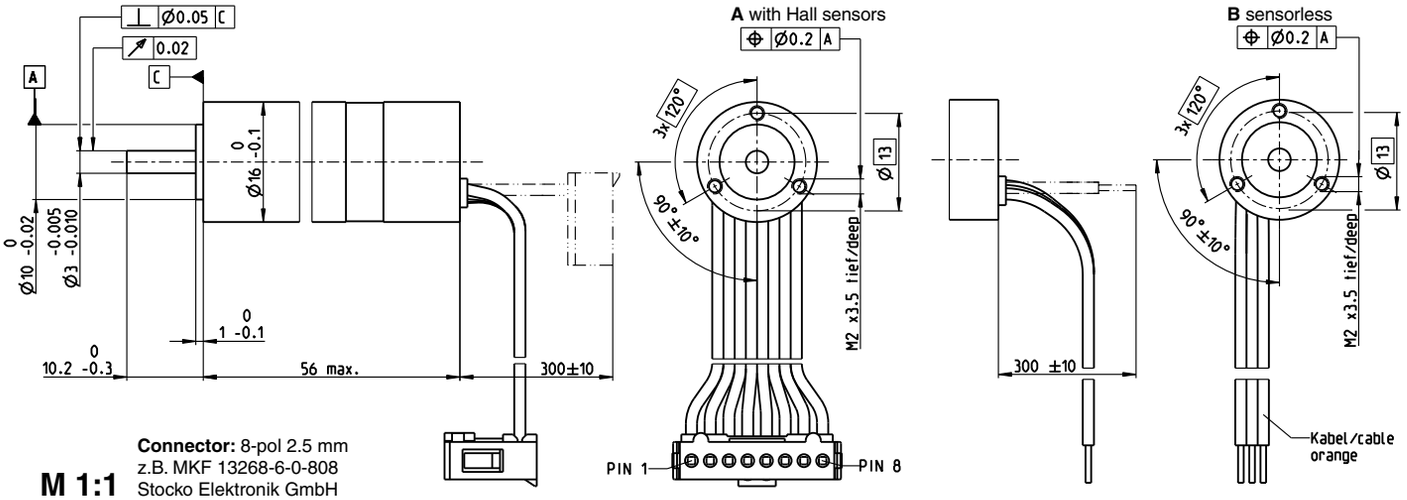

Connector: 8-pol 2.5 mm
z.B. MKF 13268-6-0-808
Stocko Elektronik GmbH

M 1:1

Stock program
Standard program
Special program (on request)

Part Numbers

A with Hall sensors	394216	396916	**395588**	396928	405794
B sensorless	397162	397294	**397292**	397295	405795

Motor Data

	Values at nominal voltage						
1	Nominal voltage	V	12	18	24	32	48
2	No load speed	rpm	37100	43400	43400	43400	41700
3	No load current	mA	327	272	204	153	96.2
4	Nominal speed	rpm	32500	39200	39400	39500	37900
5	Nominal torque (max. continuous torque)	mNm	17.2	16.9	17	17	17.1
6	Nominal current (max. continuous current)	A	5.82	4.48	3.39	2.54	1.63
7	Stall torque	mNm	157	205	221	230	224
8	Starting current	A	51.4	52	42.2	32.8	20.5
9	Max. efficiency	%	85	86	87	87	87
	Characteristics						
10	Terminal resistance phase to phase	Ω	0.233	0.346	0.569	0.976	2.34
11	Terminal inductance phase to phase	mH	0.02	0.033	0.059	0.104	0.254
12	Torque constant	mNm/A	3.06	3.94	5.25	7	10.9
13	Speed constant	rpm/V	3120	2420	1820	1360	873
14	Speed/torque gradient	rpm/mNm	238	213	197	190	187
15	Mechanical time constant	ms	2.66	2.39	2.21	2.13	2.09
16	Rotor inertia	gcm²	1.07	1.07	1.07	1.07	1.07

Specifications

Thermal data

17	Thermal resistance housing-ambient	10.3 K/W
18	Thermal resistance winding-housing	1.2 K/W
19	Thermal time constant winding	2.53 s
20	Thermal time constant motor	299 s
21	Ambient temperature	-20…+100°C
22	Max. permissible winding temperature	155°C

Mechanical data (preloaded ball bearings)

23	Max. permissible speed	70000 rpm
24	Axial play at axial load < 3.5 N	0 mm
	> 3.5 N	max. 0.14 mm
25	Radial play	preloaded
26	Max. axial load (dynamic)	3 N
27	Max. force for press fits (static)	35 N
	(static, shaft supported)	250 N
28	Max. radial loading, 5 mm from flange	10 N

Other specifications

29	Number of pole pairs	1
30	Number of phases	3
31	Weight of motor	58 g

Values listed in the table are nominal.

Connection A

brown	Motor winding 1	Pin 1
red	Motor winding 2	Pin 2
orange	Motor winding 3	Pin 3
yellow	VHall 3…24 VDC	Pin 4
green	GND	Pin 5
blue	Hall sensor 1	Pin 6
violet	Hall sensor 2	Pin 7
gray	Hall sensor 3	Pin 8

Wiring diagram for Hall sensors see p. 33

Connection B (Cable AWG 24)

brown	Motor winding 1
red	Motor winding 2
orange	Motor winding 3

Operating Range

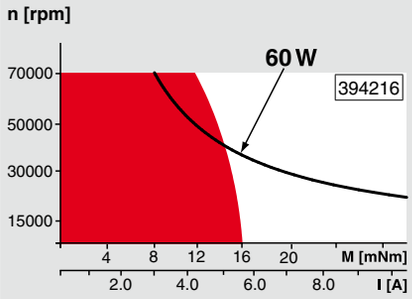

Comments

Continuous operation
In observation of above listed thermal resistance (lines 17 and 18) the maximum permissible winding temperature will be reached during continuous operation at 25°C ambient.
= Thermal limit.

Short term operation
The motor may be briefly overloaded (recurring).

Assigned power rating

maxon Modular System

Overview on page 20–25

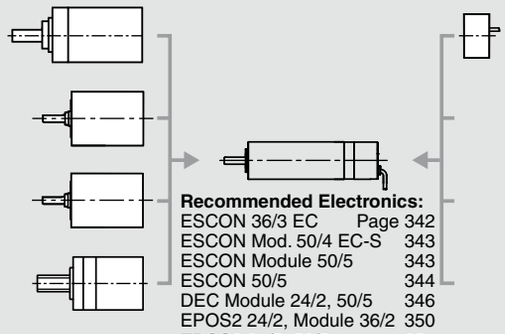

Planetary Gearhead
∅16 mm
0.2 - 0.6 Nm
Page 255

Planetary Gearhead
∅22 mm
0.5 - 1.0 Nm
Page 262

Planetary Gearhead
∅22 mm
0.5 - 2.0 Nm
Page 265

Spindle Drive
∅16/22 mm
Page 296–300

Recommended Electronics:

ESCON 36/3 EC	Page 342
ESCON Mod. 50/4 EC-S	343
ESCON Module 50/5	343
ESCON 50/5	344
DEC Module 24/2, 50/5	346
EPOS2 24/2, Module 36/2	350
EPOS2 24/5, 50/5	351
EPOS2 P 24/5	354
EPOS3 70/10 EtherCAT	357
MAXPOS 50/5	360
Notes	**24**

for type A:
Encoder MR
128/256/512 CPT,
Page 318

EC 16 ∅16 mm, brushless, 60 Watt

sterilizable

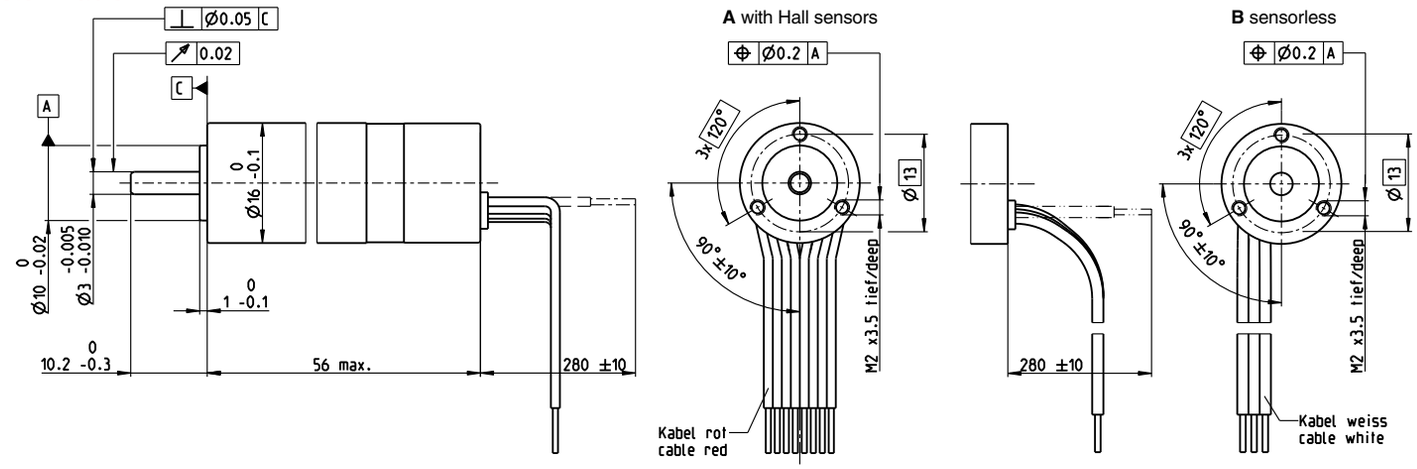

M 1:1

Stock program
Standard program
Special program (on request)

Part Numbers

A with Hall sensors	399264	399263
B sensorless	399696	399678

Motor Data

	Values at nominal voltage			
1	Nominal voltage	V	12	24
2	No load speed	rpm	47700	55200
3	No load current	mA	406	247
4	Nominal speed	rpm	42500	50700
5	Nominal torque (max. continuous torque)	mNm	14.7	14.2
6	Nominal current (max. continuous current)	A	6.48	3.63
7	Stall torque	mNm	147	202
8	Starting current	A	61.8	48.9
9	Max. efficiency	%	85	86
	Characteristics			
10	Terminal resistance phase to phase	Ω	0.194	0.491
11	Terminal inductance phase to phase	mH	0.00968	0.0291
12	Torque constant	mNm/A	2.38	4.13
13	Speed constant	rpm/V	4000	2310
14	Speed/torque gradient	rpm/mNm	326	275
15	Mechanical time constant	ms	3.66	3.08
16	Rotor inertia	gcm^2	1.07	1.07

Specifications

	Thermal data	
17	Thermal resistance housing-ambient	10.3 K/W
18	Thermal resistance winding-housing	1.2 K/W
19	Thermal time constant winding	2.18 s
20	Thermal time constant motor	299 s
21	Ambient temperature	-40…+135°C
22	Max. permissible winding temperature	155°C
	Mechanical data (preloaded ball bearings)	
23	Max. permissible speed	70000 rpm
24	Axial play at axial load < 3.5 N	0 mm
	> 3.5 N	max. 0.14 mm
25	Radial play	preloaded
26	Max. axial load (dynamic)	3 N
27	Max. force for press fits (static)	43 N
	(static, shaft supported)	250 N
28	Max. radial loading, 5 mm from flange	10 N
	Other specifications	
29	Number of pole pairs	1
30	Number of phases	3
31	Weight of motor	58 g

Values listed in the table are nominal.

Connection A and B, motor (Cable AWG 22)
red — Motor winding 1
black — Motor winding 2
white — Motor winding 3
Connection A, sensors (Cable AWG 26)
green — VHall 3…24 VDC
blue — GND
red/grey — Hall sensor 1
black/grey — Hall sensor 2
white/grey — Hall sensor 3
Wiring diagram for Hall sensors see p. 33

Operating Range

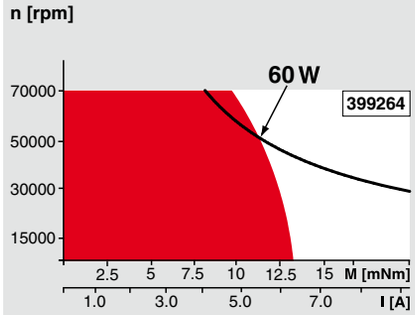

Comments

Continuous operation
In observation of above listed thermal resistance (lines 17 and 18) the maximum permissible winding temperature will be reached during continuous operation at 25°C ambient.
= Thermal limit.

Short term operation
The motor may be briefly overloaded (recurring).

Assigned power rating

Application

135°C **Sterilizable Devices**

Orthopedic Drills & Saws
Surgical Reamers
Arthroscopic Shavers
Surgical Staplers
Dental Tools

Sterilization information

Tested for 100 sterilization cycles in an autoclave.
No need to dismantle.

Sterilization with steam	
Temperature	+134°C ± 4°C
Compression pressure up to	2.3 bar
Rel. humidity	100 %
Cycle length	18 minutes

maxon modular system

Overview on page 20–25

Planetary Gearhead
sterilizable
∅16 mm
0.1 - 0.3 Nm
Page 256

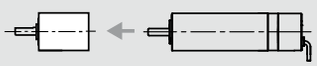

Recommended Electronics:

ESCON 36/3 EC	Page 342
ESCON Mod. 50/4 EC-S	343
ESCON Module 50/5	343
ESCON 50/5	344
DEC Module 24/2	346
DEC Module 50/5	346
Notes	**24**

EC 19 ∅19 mm, brushless, 60 Watt

NEW

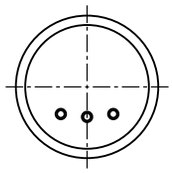

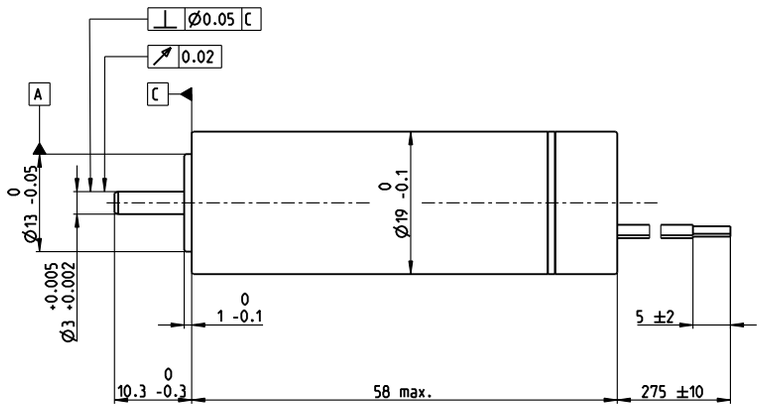

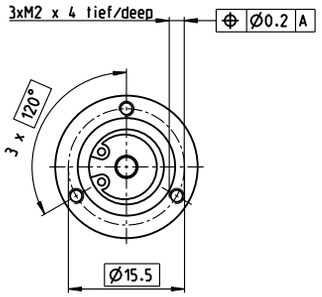

Lage des Kabelabganges
zum Befestigungsbohrbild ± 25°

alignment of cables
to mounting holes ± 25°

M 1:1

Stock program
Standard program
Special program (on request)

Part Numbers

	sensorless	475529	475530	474510	477254
Motor Data (provisional)					
Values at nominal voltage					
1 Nominal voltage	V	18	24	30	36
2 No load speed	rpm	67100	69600	65200	67000
3 No load current	mA	406	324	232	203
4 Nominal speed	rpm	63600	66100	61700	63500
5 Nominal torque (max. continuous torque)	mNm	11.8	11.6	12.2	11.3
6 Nominal current (max. continuous current)	A	4.92	3.78	2.96	2.37
7 Stall torque	mNm	335	358	334	308
8 Starting current	A	131	109	76.3	60.5
9 Max. efficiency	%	89.4	89.6	89.5	88.9
Characteristics					
10 Terminal resistance phase to phase	Ω	0.137	0.22	0.393	0.595
11 Terminal inductance phase to phase	mH	0.0224	0.037	0.0658	0.0896
12 Torque constant	mNm/A	2.55	3.28	4.37	5.1
13 Speed constant	rpm/V	3740	2910	2180	1870
14 Speed/torque gradient	rpm/mNm	201	195	196	218
15 Mechanical time constant	ms	3.46	3.35	3.37	3.75
16 Rotor inertia	gcm²	1.64	1.64	1.64	1.64

Specifications

Thermal data		
17 Thermal resistance housing-ambient		10.7 K/W
18 Thermal resistance winding-housing		0.81 K/W
19 Thermal time constant winding		2.67 s
20 Thermal time constant motor		426 s
21 Ambient temperature		-20…+100°C
22 Max. permissible winding temperature		120°C
Mechanical data (preloaded ball bearings)		
23 Max. permissible speed		80000 rpm
24 Axial play at axial load	< 3 N	0 mm
	> 3 N	max. 0.14 mm
25 Radial play		preloaded
26 Max. axial load (dynamic)		3 N
27 Max. force for press fits (static)		22 N
(static, shaft supported)		1410 N
28 Max. radial loading, 5 mm from flange		12 N
Other specifications		
29 Number of pole pairs		1
30 Number of phases		3
31 Weight of motor		80 g

Values listed in the table are nominal.

Connection motor (Cable AWG 22)

red	Motor winding 1
black	Motor winding 2
white	Motor winding 3

Operating Range

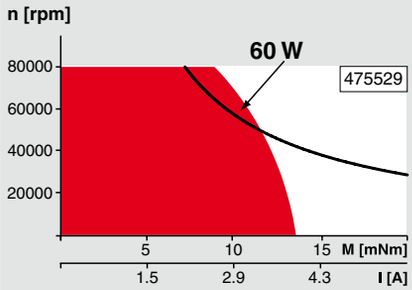

Comments

Continuous operation
In observation of above listed thermal resistance (lines 17 and 18) the maximum permissible winding temperature will be reached during continuous operation at 25°C ambient.
= Thermal limit.

Short term operation
The motor may be briefly overloaded (recurring).

Assigned power rating

maxon Modular System

Overview on page 20–25

Recommended Electronics:
ESCON Mod. 50/4 EC-S 343
Notes **24**

EC 19 ∅19 mm, brushless, 120 Watt

High Power

NEW

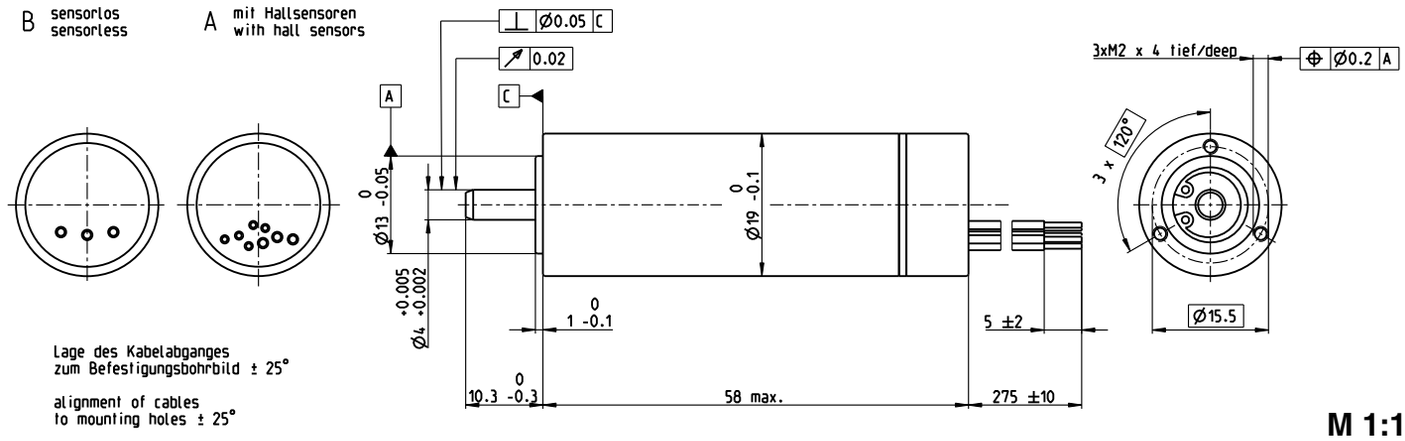

M 1:1

Stock program
Standard program
Special program (on request)

Part Numbers			
A with Hall sensors	475523	475524	467392
B sensorless	475527	475528	474494

Motor Data (provisional)				
Values at nominal voltage				
1 Nominal voltage	V	24	30	36
2 No load speed	rpm	62200	60500	54400
3 No load current	mA	272	208	147
4 Nominal speed	rpm	59200	57600	51600
5 Nominal torque (max. continuous torque)	mNm	23.5	24.1	24.5
6 Nominal current (max. continuous current)	A	6.61	5.25	3.99
7 Stall torque	mNm	589	610	559
8 Starting current	A	160	129	88.7
9 Max. efficiency	%	92	92.2	92.1
Characteristics				
10 Terminal resistance phase to phase	Ω	0.15	0.233	0.406
11 Terminal inductance phase to phase	mH	0.010	0.017	0.030
12 Torque constant	mNm/A	3.68	4.73	6.31
13 Speed constant	rpm/V	2600	2020	1510
14 Speed/torque gradient	rpm/mNm	106	99.3	97.5
15 Mechanical time constant	ms	2.01	1.88	1.85
16 Rotor inertia	gcm^2	1.81	1.81	1.81

Specifications

Thermal data		
17 Thermal resistance housing-ambient		10.7 K/W
18 Thermal resistance winding-housing		0.81 K/W
19 Thermal time constant winding		2.67 s
20 Thermal time constant motor		437 s
21 Ambient temperature		-20…+100°C
22 Max. permissible winding temperature		155°C
Mechanical data (preloaded ball bearings)		
23 Max. permissible speed		100000 rpm
24 Axial play at axial load	< 3 N	0 mm
	> 3 N	max. 0.14 mm
25 Radial play		preloaded
26 Max. axial load (dynamic)		3 N
27 Max. force for press fits (static)		22 N
(static, shaft supported)		1410 N
28 Max. radial loading, 5 mm from flange		12 N
Other specifications		
29 Number of pole pairs		1
30 Number of phases		3
31 Weight of motor		82 g

Values listed in the table are nominal.

Connection A and B, motor (Cable AWG 22)
red — Motor winding 1
black — Motor winding 2
white — Motor winding 3
Connection A, sensors (Cable AWG 26)
green — VHall 3…24 VDC
blue — GND
red/grey — Hall sensor 1
black/grey — Hall sensor 2
white/grey — Hall sensor 3
Wiring diagram for Hall sensors see p. 33

Operating Range

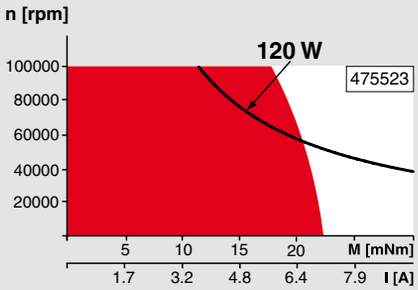

Comments

Continuous operation
In observation of above listed thermal resistance (lines 17 and 18) the maximum permissible winding temperature will be reached during continuous operation at 25°C ambient.
= Thermal limit.

Short term operation
The motor may be briefly overloaded (recurring).

Assigned power rating

maxon Modular System

Overview on page 20–25

Recommended Electronics:

ESCON 36/3 EC	Page 342
ESCON Mod. 50/4 EC-S	343
ESCON Module 50/5	343
ESCON 50/5, 70/10	344
DEC Module 24/2, 50/5	346
Notes	**24**

EC 19 ∅19 mm, brushless, 120 Watt

NEW

High Power, sterilizable

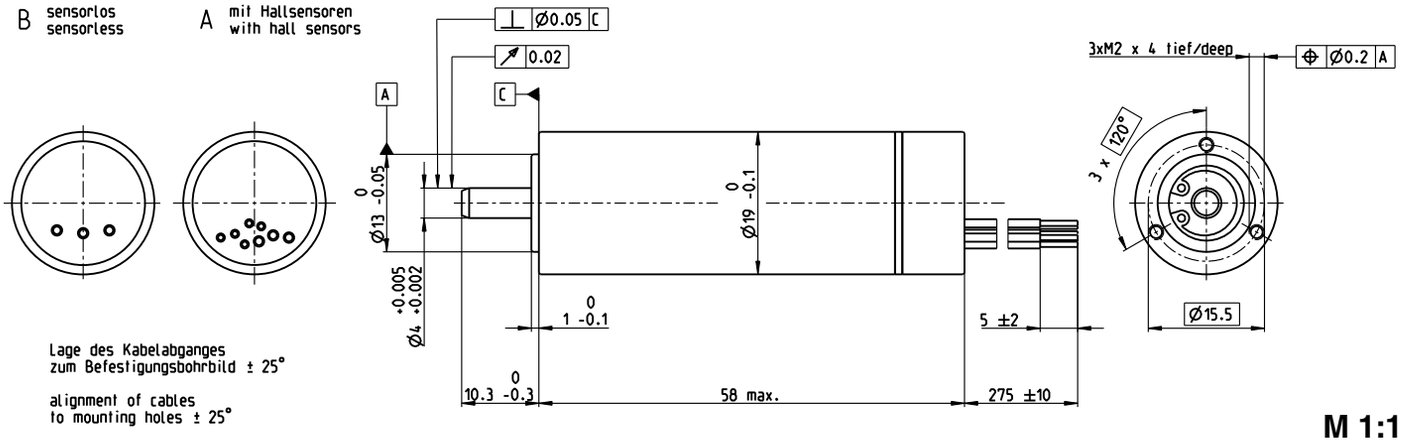

M 1:1

Stock program
Standard program
Special program (on request)

Part Numbers

A with Hall sensors	475521	475522	467168
B sensorless	475525	475526	474493

Motor Data (provisional)

	Values at nominal voltage			
1	Nominal voltage	V	24	30	36
2	No load speed	rpm	62200	60500	54400
3	No load current	mA	272	208	147
4	Nominal speed	rpm	59400	57700	51700
5	Nominal torque (max. continuous torque)	mNm	22.5	24	24.5
6	Nominal current (max. continuous current)	A	6.35	5.24	3.99
7	Stall torque	mNm	593	646	578
8	Starting current	A	161	137	91.6
9	Max. efficiency	%	92	92.4	92.2
	Characteristics				
10	Terminal resistance phase to phase	Ω	0.149	0.22	0.393
11	Terminal inductance phase to phase	mH	0.0103	0.017	0.0302
12	Torque constant	mNm/A	3.68	4.73	6.31
13	Speed constant	rpm/V	2600	2020	1510
14	Speed/torque gradient	rpm/mNm	105	93.8	94.4
15	Mechanical time constant	ms	1.99	1.78	1.79
16	Rotor inertia	gcm²	1.81	1.81	1.81

Specifications

	Thermal data	
17	Thermal resistance housing-ambient	10.7 K/W
18	Thermal resistance winding-housing	0.808 K/W
19	Thermal time constant winding	2.46 s
20	Thermal time constant motor	437 s
21	Ambient temperature	-40…+135°C
22	Max. permissible winding temperature	155°C
	Mechanical data (preloaded ball bearings)	
23	Max. permissible speed	100 000 rpm
24	Axial play at axial load < 3 N	0 mm
	> 3 N	max. 0.14 mm
25	Radial play	preloaded
26	Max. axial load (dynamic)	3 N
27	Max. force for press fits (static)	22 N
	(static, shaft supported)	1410 N
28	Max. radial loading, 5 mm from flange	12 N
	Other specifications	
29	Number of pole pairs	1
30	Number of phases	3
31	Weight of motor	82 g

Values listed in the table are nominal.

Connection A and B, motor (Cable AWG 22)
red — Motor winding 1
black — Motor winding 2
white — Motor winding 3
Connection A, sensors (Cable AWG 26)
green — VHall 3…24 VDC
blue — GND
red/grey — Hall sensor 1
black/grey — Hall sensor 2
white/grey — Hall sensor 3
Wiring diagram for Hall sensors see p. 33

Operating Range

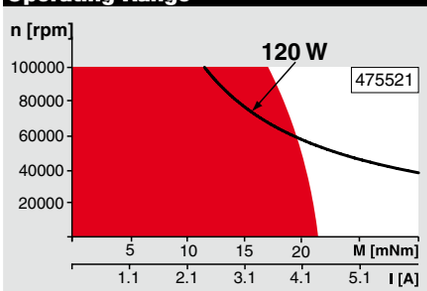

Comments

Continuous operation
In observation of above listed thermal resistance (lines 17 and 18) the maximum permissible winding temperature will be reached during continuous operation at 25°C ambient.
= Thermal limit.

Short term operation
The motor may be briefly overloaded (recurring).

Assigned power rating

Application

135°C

Sterilizable Devices

Orthopedic Drills & Saws
Surgical Reamers
Arthroscopic Shavers
Surgical Staplers
Dental Tools

Sterilization information

Tested for 1000 sterilization cycles in an autoclave.
No need to dismantle.

Sterilization with steam	
Temperature	+134°C ± 4°C
Compression pressure up to	2.3 bar
Rel. humidity	100 %
Cycle length	18 minutes

maxon modular system

Overview on page 20–25

Planetary Gearhead
sterilizable
∅19 mm
0.5 - 2.0 Nm
Page 268

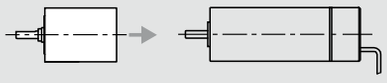

Recommended Electronics:

ESCON 36/3 EC	Page 342
ESCON Mod. 50/4 EC-S	343
ESCON Module 50/5	343
ESCON 50/5	344
ESCON 70/10	344
DEC Module 24/2, 50/5	346
Notes	**24**

EC 22 ∅22 mm, brushless, 40 Watt

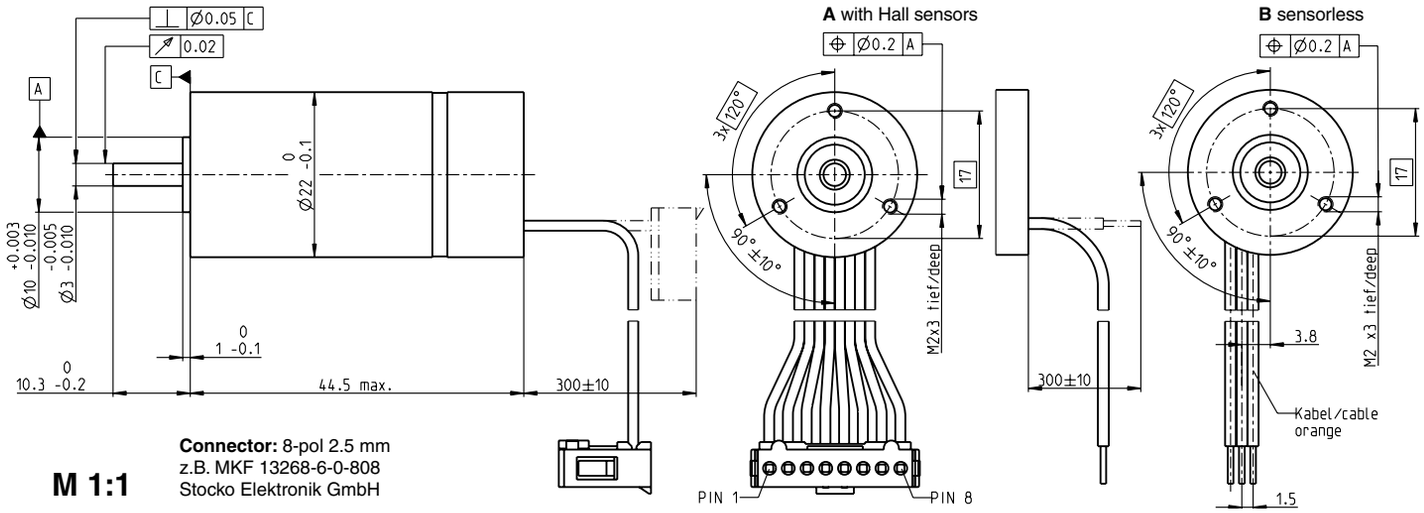

Connector: 8-pol 2.5 mm
z.B. MKF 13268-6-0-808
Stocko Elektronik GmbH

M 1:1

Stock program
Standard program
Special program (on request)

Part Numbers

A with Hall sensors	386657	**386658**	386659	386660
B sensorless	386661	**386662**	386663	386664

Motor Data

	Values at nominal voltage					
1	Nominal voltage	V	12	24	36	48
2	No load speed	rpm	30400	35100	31600	34100
3	No load current	mA	330	205	116	98.3
4	Nominal speed	rpm	26700	31800	28400	31000
5	Nominal torque (max. continuous torque)	mNm	20.4	20	19.9	19.5
6	Nominal current (max. continuous current)	A	5.7	3.25	1.93	1.54
7	Stall torque	mNm	184	243	221	237
8	Starting current	A	49.1	37.4	20.4	17.7
9	Max. efficiency	%	85	86	86	86
	Characteristics					
10	Terminal resistance phase to phase	Ω	0.244	0.641	1.76	2.71
11	Terminal inductance phase to phase	mH	0.0182	0.0546	0.152	0.231
12	Torque constant	mNm/A	3.75	6.49	10.8	13.3
13	Speed constant	rpm/V	2550	1470	882	716
14	Speed/torque gradient	rpm/mNm	166	145	144	145
15	Mechanical time constant	ms	4.16	3.64	3.6	3.64
16	Rotor inertia	gcm^2	2.39	2.39	2.39	2.39

Specifications

	Thermal data	
17	Thermal resistance housing-ambient	10 K/W
18	Thermal resistance winding-housing	2 K/W
19	Thermal time constant winding	4.85 s
20	Thermal time constant motor	278 s
21	Ambient temperature	-20…+100°C
22	Max. permissible winding temperature	+155°C
	Mechanical data (preloaded ball bearings)	
23	Max. permissible speed	60000 rpm
24	Axial play at axial load < 4.5 N	0 mm
	> 4.5 N	max. 0.14 mm
25	Radial play	preloaded
26	Max. axial load (dynamic)	4 N
27	Max. force for press fits (static)	45 N
	(static, shaft supported)	250 N
28	Max. radial loading, 5 mm from flange	16 N
	Other specifications	
29	Number of pole pairs	1
30	Number of phases	3
31	Weight of motor	85 g

Values listed in the table are nominal.

Connection A

brown	Motor winding 1	Pin 1
red	Motor winding 2	Pin 2
orange	Motor winding 3	Pin 3
yellow	VHall 3…24 VDC	Pin 4
green	GND	Pin 5
blue	Hall sensor 1	Pin 6
violet	Hall sensor 2	Pin 7
grey	Hall sensor 3	Pin 8

Wiring diagram for Hall sensors see p. 33

Connection B (Cable AWG 24)

brown	Motor winding 1
red	Motor winding 2
orange	Motor winding 3

Operating Range

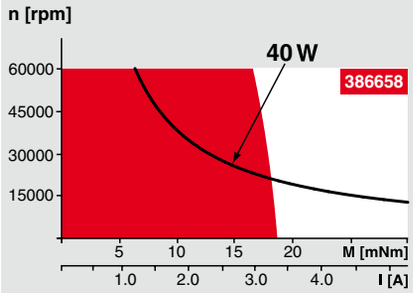

Comments

Continuous operation
In observation of above listed thermal resistance (lines 17 and 18) the maximum permissible winding temperature will be reached during continuous operation at 25°C ambient.
= Thermal limit.

Short term operation
The motor may be briefly overloaded (recurring).

Assigned power rating

maxon Modular System

Overview on page 20–25

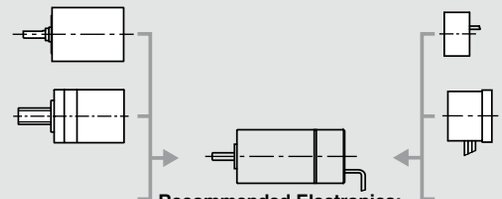

Planetary Gearhead
∅22 mm
0.5 - 3.4 Nm
Page 265/266

Spindle Drive
∅22 mm
Page 299/300

for type A:
Encoder MR
128/256/512 CPT,
Page 318

for type B:
Resolver
on request

Recommended Electronics:

ESCON 36/3 EC	Page 342
ESCON Mod. 50/4 EC-S	343
ESCON Module 50/5	343
ESCON 50/5, 70/10	344
DEC Module 24/2, 50/5	346
EPOS2 24/2, Module 36/2	350
EPOS2 24/5, 50/5, 70/10	351
EPOS2 P 24/5	354
EPOS3 70/10 EtherCAT	357
MAXPOS 50/5	360
Notes	**24**

EC 22 ∅22 mm, brushless, 40 Watt

sterilizable

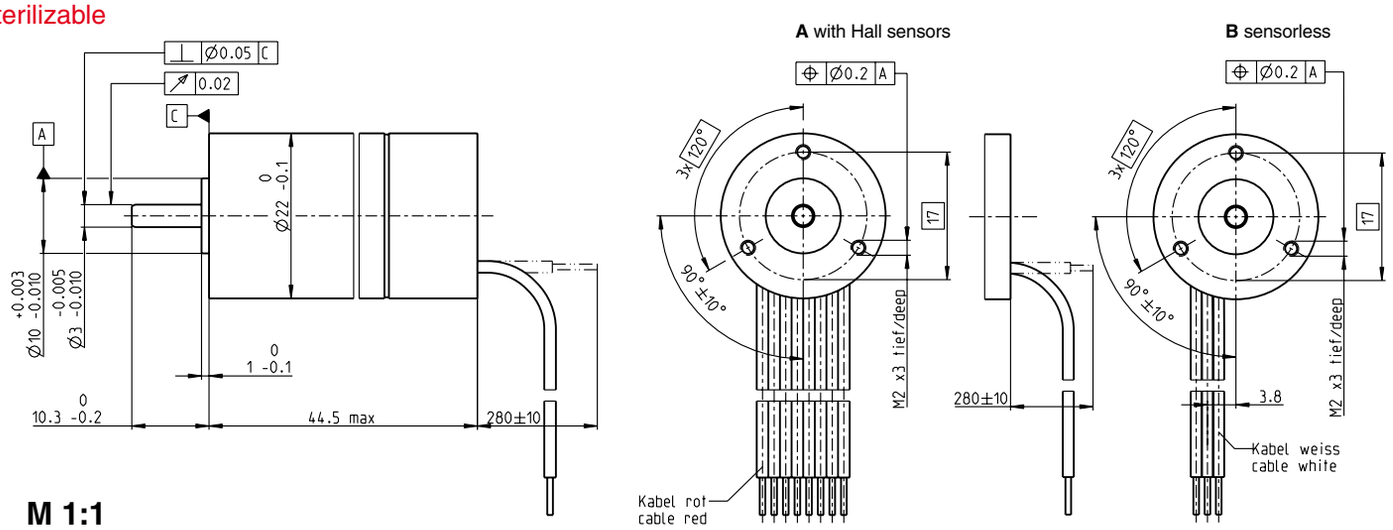

M 1:1

Stock program
Standard program
Special program (on request)

Part Numbers

A with Hall sensors	386665	386666	386667	386668
B sensorless	386669	386670	386671	386672

Motor Data

	Values at nominal voltage					
1	Nominal voltage	V	12	24	36	48
2	No load speed	rpm	36100	41700	41800	44900
3	No load current	mA	327	198	132	110
4	Nominal speed	rpm	31700	37800	37900	41000
5	Nominal torque (max. continuous torque)	mNm	17.1	16.8	16.7	16.1
6	Nominal current (max. continuous current)	A	5.67	3.23	2.14	1.68
7	Stall torque	mNm	155	204	210	219
8	Starting current	A	49.1	37.4	25.7	21.5
9	Max. efficiency	%	85	86	86	86
	Characteristics					
10	Terminal resistance phase to phase	Ω	0.244	0.641	1.4	2.23
11	Terminal inductance phase to phase	mH	0.0182	0.0546	0.123	0.189
12	Torque constant	mNm/A	3.15	5.46	8.18	10.1
13	Speed constant	rpm/V	3030	1750	1170	941
14	Speed/torque gradient	rpm/mNm	235	206	200	206
15	Mechanical time constant	ms	5.2	4.54	4.41	4.56
16	Rotor inertia	gcm²	2.11	2.11	2.11	2.11

Specifications

	Thermal data	
17	Thermal resistance housing-ambient	10 K/W
18	Thermal resistance winding-housing	2 K/W
19	Thermal time constant winding	4.85 s
20	Thermal time constant motor	278 s
21	Ambient temperature	-40…+135°C
22	Max. permissible winding temperature	155°C
	Mechanical data (preloaded ball bearings)	
23	Max. permissible speed	60000 rpm
24	Axial play at axial load < 4.5 N	0 mm
	> 4.5 N	max. 0.14 mm
25	Radial play	preloaded
26	Max. axial load (dynamic)	4 N
27	Max. force for press fits (static)	53 N
	(static, shaft supported)	250 N
28	Max. radial loading, 5 mm from flange	16 N
	Other specifications	
29	Number of pole pairs	1
30	Number of phases	3
31	Weight of motor	85 g

Values listed in the table are nominal.

Connection A and B, motor (Cable AWG 22)
red — Motor winding 1
black — Motor winding 2
white — Motor winding 3
Connection A, sensors (Cable AWG 26)
green — VHall 3…24 VDC
blue — GND
red/grey — Hall sensor 1
black/grey — Hall sensor 2
white/grey — Hall sensor 3
Wiring diagram for Hall sensors see p. 33

Operating Range

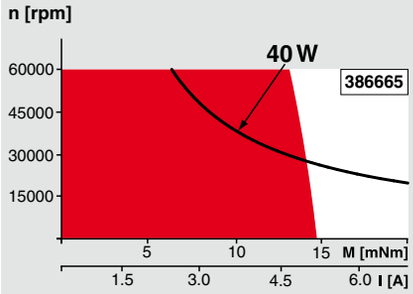

Comments

Continuous operation
In observation of above listed thermal resistance (lines 17 and 18) the maximum permissible winding temperature will be reached during continuous operation at 25°C ambient.
= Thermal limit.

Short term operation
The motor may be briefly overloaded (recurring).

Assigned power rating

Application

135°C

Sterilizable Devices

Orthopedic Drills & Saws
Surgical Reamers
Arthroscopic Shavers
Surgical Staplers
Dental Tools

Sterilization information

Tested for 100 sterilization cycles in an autoclave.
No need to dismantle.

Sterilization with steam	
Temperature	+134°C ± 4°C
Compression pressure up to	2.3 bar
Rel. humidity	100 %
Cycle length	18 minutes

maxon modular system

Overview on page 20–25

Planetary Gearhead
sterilizable
∅22 mm
0.5 - 2.0 Nm
Page 268

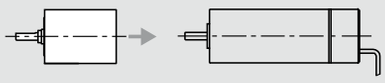

Recommended Electronics:

ESCON 36/3 EC	Page 342
ESCON Mod. 50/4 EC-S	343
ESCON Module 50/5	343
ESCON 50/5	344
ESCON 70/10	344
DEC Module 24/2, 50/5	346
Notes	**24**

EC 22 ∅22 mm, brushless, 100 Watt

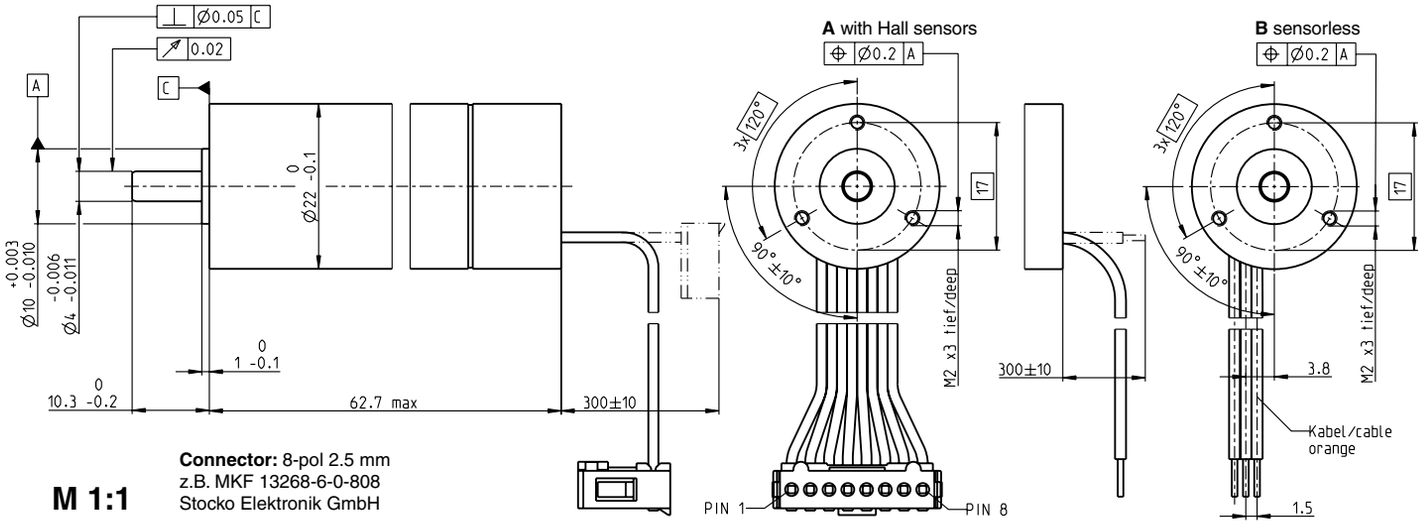

Connector: 8-pol 2.5 mm
z.B. MKF 13268-6-0-808
Stocko Elektronik GmbH

M 1:1

Stock program
Standard program
Special program (on request)

Part Numbers

A with Hall sensors	386673	386674	386675
B sensorless	386676	386677	386678

Motor Data

	Values at nominal voltage				
1	Nominal voltage	V	18	24	48
2	No load speed	rpm	31000	29500	32200
3	No load current	mA	383	263	153
4	Nominal speed	rpm	28300	27100	30000
5	Nominal torque (max. continuous torque)	mNm	49	48.2	47.3
6	Nominal current (max. continuous current)	A	9.11	6.4	3.43
7	Stall torque	mNm	643	690	856
8	Starting current	A	116	89.1	60.2
9	Max. efficiency	%	89	90	90
	Characteristics				
10	Terminal resistance phase to phase	Ω	0.155	0.269	0.797
11	Terminal inductance phase to phase	mH	0.0178	0.035	0.118
12	Torque constant	mNm/A	5.53	7.75	14.2
13	Speed constant	rpm/V	1730	1230	672
14	Speed/torque gradient	rpm/mNm	48.4	42.9	37.7
15	Mechanical time constant	ms	2.07	1.84	1.61
16	Rotor inertia	gcm²	4.09	4.09	4.09

Specifications

	Thermal data	
17	Thermal resistance housing-ambient	7 K/W
18	Thermal resistance winding-housing	1 K/W
19	Thermal time constant winding	4.92 s
20	Thermal time constant motor	355 s
21	Ambient temperature	-20…+100°C
22	Max. permissible winding temperature	155°C
	Mechanical data (preloaded ball bearings)	
23	Max. permissible speed	60000 rpm
24	Axial play at axial load < 4.5 N	0 mm
	> 4.5 N	max. 0.14 mm
25	Radial play	preloaded
26	Max. axial load (dynamic)	4 N
27	Max. force for press fits (static)	40 N
	(static, shaft supported)	250 N
28	Max. radial loading, 5 mm from flange	16 N
	Other specifications	
29	Number of pole pairs	1
30	Number of phases	3
31	Weight of motor	128 g

Values listed in the table are nominal.

Connection A

brown	Motor winding 1	Pin 1
red	Motor winding 2	Pin 2
orange	Motor winding 3	Pin 3
yellow	VHall 3…24 VDC	Pin 4
green	GND	Pin 5
blue	Hall sensor 1	Pin 6
violet	Hall sensor 2	Pin 7
gray	Hall sensor 3	Pin 8

Wiring diagram for Hall sensors see p. 33

Connection B (Cable AWG 24)

brown	Motor winding 1
red	Motor winding 2
orange	Motor winding 3

Operating Range

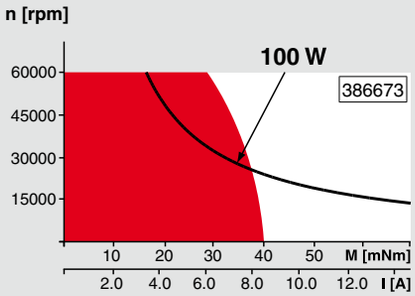

Comments

Continuous operation
In observation of above listed thermal resistance (lines 17 and 18) the maximum permissible winding temperature will be reached during continuous operation at 25°C ambient.
= Thermal limit.

Short term operation
The motor may be briefly overloaded (recurring).

Assigned power rating

maxon Modular System

Overview on page 20–25

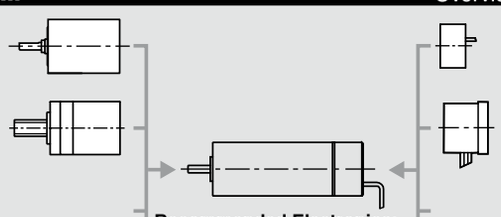

Planetary Gearhead
∅22 mm
0.5 - 3.4 Nm
Page 265/266

Spindle Drive
∅22 mm
Page 299/300

for type A:
Encoder MR
128/256/512 CPT,
Page 318

for type B:
Resolver
on request

Recommended Electronics:

ESCON 36/3 EC	Page 342
ESCON Mod. 50/4 EC-S	343
ESCON Module 50/5	343
ESCON 50/5, 70/10	344
DEC Module 24/2, 50/5	346
EPOS2 24/2, Module 36/2	350
EPOS2 24/5, 50/5, 70/10	351
EPOS2 P 24/5	354
EPOS3 70/10 EtherCAT	357
MAXPOS 50/5	360
Notes	**24**

EC 22 ∅22 mm, brushless, 100 Watt

sterilizable

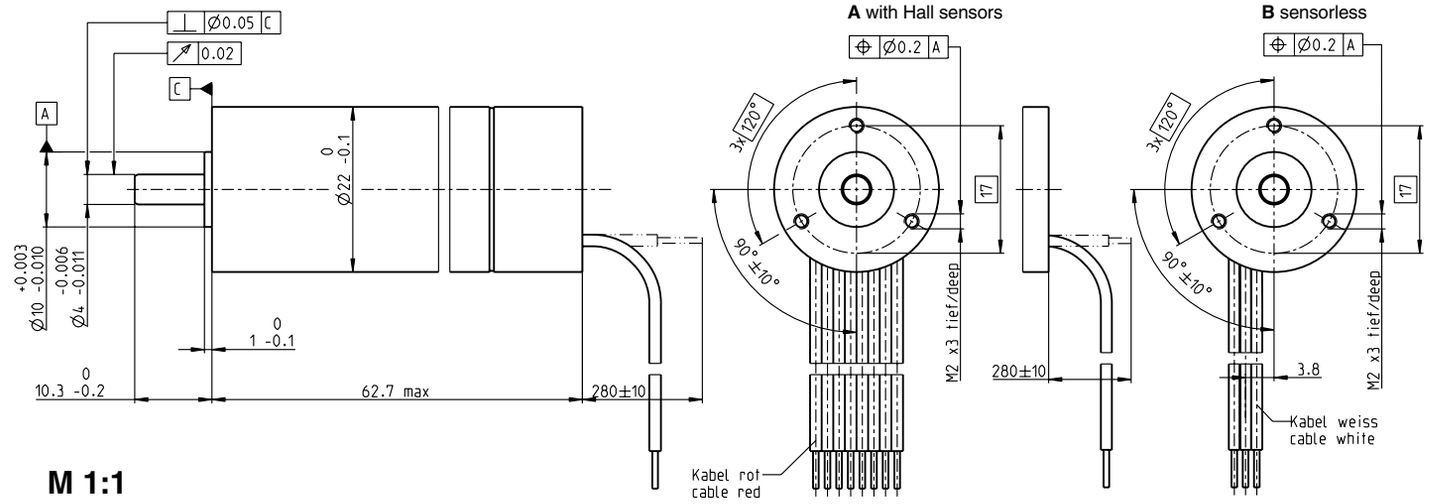

M 1:1

Stock program
Standard program
Special program (on request)

Part Numbers

A with Hall sensors	386679	386680
B sensorless	386681	386682

Motor Data

	Values at nominal voltage			
1	Nominal voltage	V	24	42
2	No load speed	rpm	32400	32700
3	No load current	mA	195	113
4	Nominal speed	rpm	29400	30000
5	Nominal torque (max. continuous torque)	mNm	41.9	41.8
6	Nominal current (max. continuous current)	A	6.03	3.48
7	Stall torque	mNm	546	612
8	Starting current	A	77.4	50.1
9	Max. efficiency	%	90	91
	Characteristics			
10	Terminal resistance phase to phase	Ω	0.31	0.839
11	Terminal inductance phase to phase	mH	0.0438	0.131
12	Torque constant	mNm/A	7.06	12.2
13	Speed constant	rpm/V	1350	781
14	Speed/torque gradient	rpm/mNm	59.4	53.6
15	Mechanical time constant	ms	2.55	2.29
16	Rotor inertia	gcm²	4.09	4.09

Specifications

	Thermal data	
17	Thermal resistance housing-ambient	7 K/W
18	Thermal resistance winding-housing	1 K/W
19	Thermal time constant winding	5.01 s
20	Thermal time constant motor	355 s
21	Ambient temperature	-40…+135°C
22	Max. permissible winding temperature	155°C
	Mechanical data (preloaded ball bearings)	
23	Max. permissible speed	60000 rpm
24	Axial play at axial load < 4.5 N	0 mm
	> 4.5 N	max. 0.14 mm
25	Radial play	preloaded
26	Max. axial load (dynamic)	4 N
27	Max. force for press fits (static)	45 N
	(static, shaft supported)	250 N
28	Max. radial loading, 5 mm from flange	16 N
	Other specifications	
29	Number of pole pairs	1
30	Number of phases	3
31	Weight of motor	128 g

Values listed in the table are nominal.

Connection A and B, motor (Cable AWG 22)
red — Motor winding 1
black — Motor winding 2
white — Motor winding 3
Connection A, sensors (Cable AWG 26)
green — VHall 3…24 VDC
blue — GND
red/grey — Hall sensor 1
black/grey — Hall sensor 2
white/grey — Hall sensor 3
Wiring diagram for Hall sensors see p. 33

Operating Range

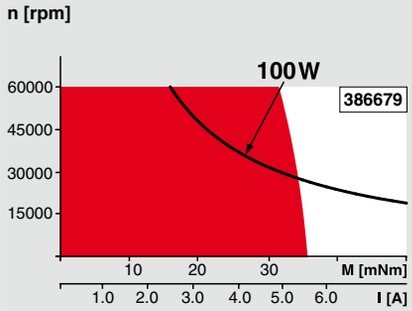

Comments

Continuous operation
In observation of above listed thermal resistance (lines 17 and 18) the maximum permissible winding temperature will be reached during continuous operation at 25°C ambient.
= Thermal limit.

Short term operation
The motor may be briefly overloaded (recurring).

Assigned power rating

Application

135°C **Sterilizable Devices**

Orthopedic Drills & Saws
Surgical Reamers
Arthroscopic Shavers
Surgical Staplers
Dental Tools

Sterilization information

Tested for 100 sterilization cycles in an autoclave.
No need to dismantle.

Sterilization with steam	
Temperature	+134°C ± 4°C
Compression pressure up to	2.3 bar
Rel. humidity	100 %
Cycle length	18 minutes

maxon modular system

Overview on page 20–25

Planetary Gearhead
sterilizable
∅22 mm
0.5 - 2.0 Nm
Page 268

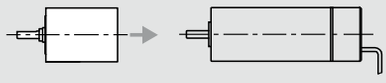

Recommended Electronics:

ESCON 36/3 EC	Page 342
ESCON Mod. 50/4 EC-S	343
ESCON Module 50/5	343
ESCON 50/5	344
ESCON 70/10	344
DEC Module 24/2, 50/5	346
Notes	**24**

EC 22 ∅22 mm, brushless, 80 Watt

Heavy Duty – for applications in air

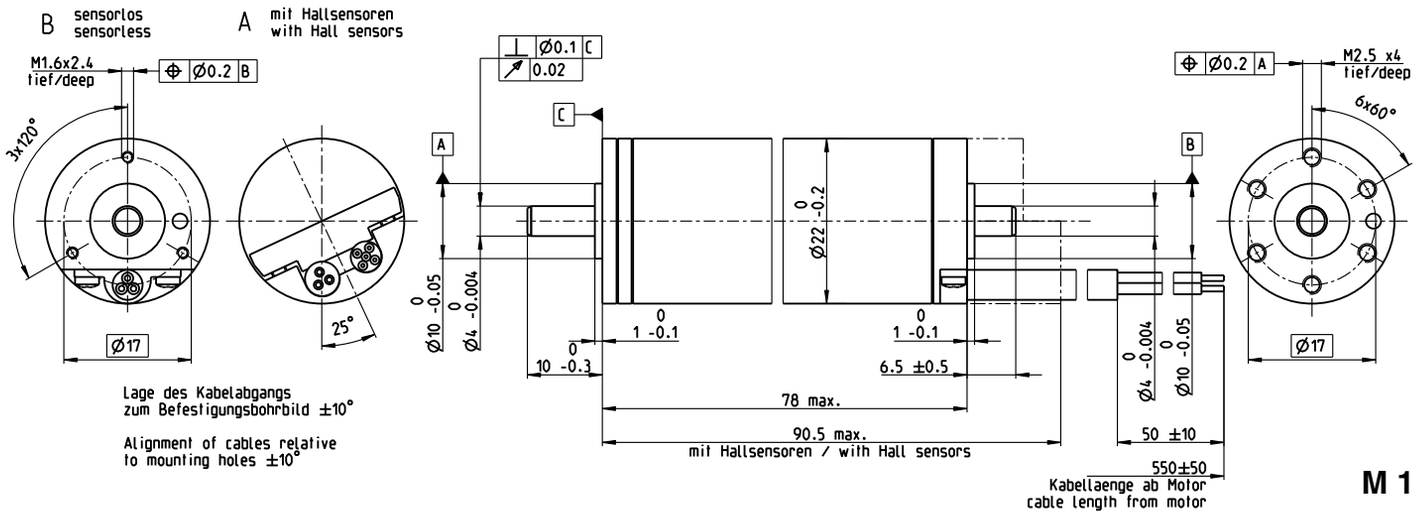

Stock program
Standard program
Special program (on request)

Part Numbers	
A with Hall sensors	426448
B sensorless	426449

Motor Data (provisional)

Values at nominal voltage and ambient temperature °C		25	100	150	200
1 Nominal voltage	V	48	48	48	48
2 No load speed	rpm	13300	13600	13800	14100
3 No load current	mA	63.9	53.4	54.9	56.5
4 Nominal speed[1]	rpm	11400	11700	12200	13200
5 Nominal torque (max. continuous torque)[1]	mNm	57.9	44	32.4	14.9
6 Nominal current (max. continuous current)	A	1.72	1.35	1.03	0.515
7 Stall torque	mNm	460	346	295	256
8 Starting current	A	13.4	10.3	8.98	7.93
9 Max. efficiency	%	87	86	85	84
Characteristics					
10 Terminal resistance phase to phase	Ω	3.59	4.64	5.35	6.05
11 Terminal inductance phase to phase	mH	0.626	0.626	0.626	0.626
12 Torque constant	mNm/A	34.4	33.5	32.9	32.3
13 Speed constant	rpm/V	278	285	290	296
14 Speed / torque gradient	rpm/mNm	29	39.5	47.2	55.4
15 Mechanical time constant	ms	2.31	3.16	3.77	4.43
16 Rotor inertia	gcm^2	7.63	7.63	7.63	7.63

[1] Values for operation in thermal equilibrium.

Specifications

Thermal data

17	Thermal resistance housing-ambient	9.12 K/W
18	Thermal resistance winding-housing	0.92 K/W
19	Thermal time constant winding	5.84 s
20	Thermal time constant motor	462 s
21	Ambient temperature	-55 … +200°C
22	Max. permissible winding temperature	+240°C

Mechanical data (preloaded ball bearings)

23	Max. permissible speed	20000 rpm
24	Axial play at axial load < 5 N	0 mm
	> 5 N	max. 0.14 mm
25	Radial play	preloaded
26	Max. axial load (dynamic)	8 N
27	Max. force for press fits (static)	98 N
	(static, shaft supported)	250 N
28	Max. radial loading, 5 mm from flange	16 N

Other specifications

29	Number of pole pairs	1
30	Number of phases	3
31	Weight of motor (sensorless)	210 g

Connection A, motor cable PTFE (AWG 19)

red	Motor winding 1
black	Motor winding 2
white	Motor winding 3

Connection A, sensors cable PTFE (AWG 24)

green	V_{Hall} 4.5…24 V
blue	GND
red	Hall sensor 1
black	Hall sensor 2
white	Hall sensor 3

Connection B, motor cable PTFE (AWG 19)

red	Motor winding 1
black	Motor winding 2
white	Motor winding 3

Operating Range

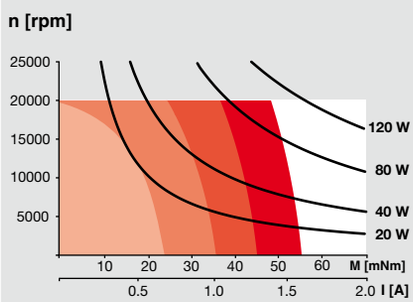

Comments

TA = 25°C
TA = 100°C
TA = 150°C
TA = 200°C

Continuous operation
In observation of above listed thermal resistance (lines 17 and 18) the maximum permissible winding temperature will be reached during continuous operation at 25°C ambient.
= Thermal limit.

Short term operation
The motor may be briefly overloaded (recurring).

Assigned power rating

Application

General
– extreme temperature applications
– vibration tested (according to MIL-STD810F/Jan2000 Fig. 514.5C-10)
– ultra-high vacuum applications (low outgassing, can be baked out at 240°C)

Aerospace
– gas turbine starter/generators for aircraft engines
– regulation of combustion engines

Oil & Gas Industry
– oil, gas and geothermal wells

Robotics
– robotic exploration vehicles

Industry
– pumps and valves for liquid metal cooling systems/turbine fuel and steam control
– valve adjustment for gas and steam power plants

Notice

This motor contains leaded solder. It therefore does not fulfill the requirements for the permitted maximum concentration of hazardous substances in accordance with the EC directive 2011/65/EC (RoHS) for all applications. The motor may therefore only be used for devices that are not subject to this directive.

EC 22 ∅22 mm, brushless, 240 Watt

Heavy Duty – for applications in oil

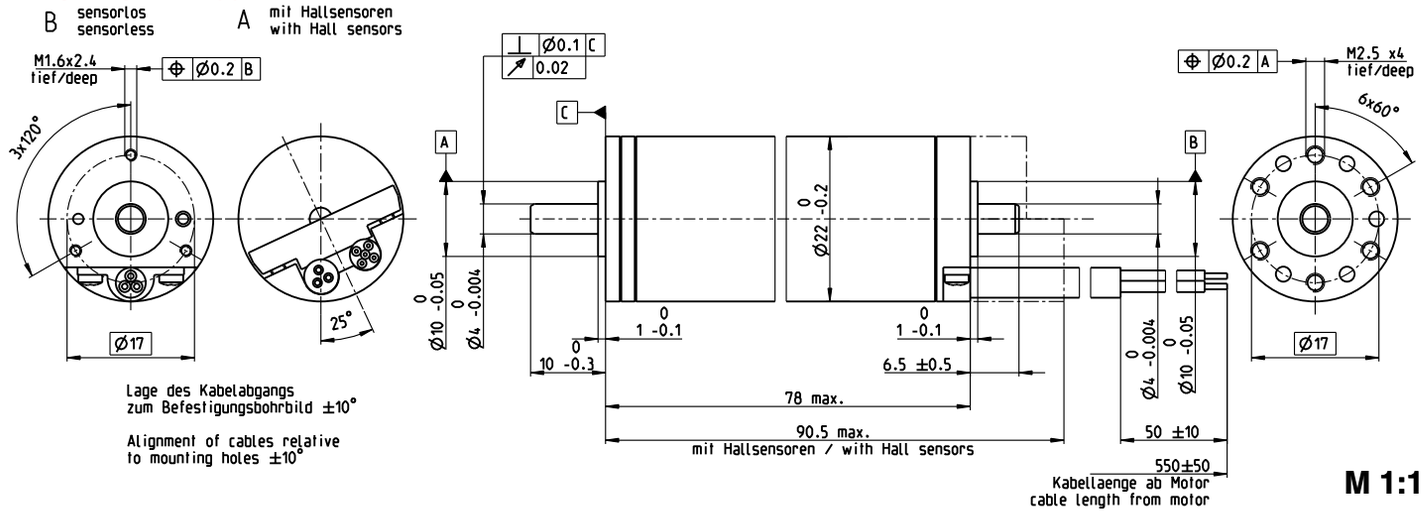

Stock program
Standard program
Special program (on request)

Part Numbers

A with Hall Sensors	426450
B sensorless	426451

Motor Data (provisional)

Values at nominal voltage and ambient temperature °C		25	100	150	200
1 Nominal voltage	V	48	48	48	48
2 No load speed	rpm	12900	13400	13600	13800
3 No load current	mA	384	177	183	188
4 Nominal speed[1]	rpm	8410	8510	9130	10600
5 Nominal torque (max. continuous torque)[1]	mNm	149	120	92.2	55.8
6 Nominal current (max. continuous current)	A	4.48	3.61	2.88	1.86
7 Stall torque	mNm	460	346	295	256
8 Starting current	A	13.4	10.3	8.98	7.93
9 Max. efficiency	%	71	77	75	73
Characteristics					
10 Terminal resistance phase to phase	Ω	3.59	4.64	5.35	6.05
11 Terminal inductance phase to phase	mH	0.626	0.626	0.626	0.626
12 Torque constant	mNm/A	34.4	33.5	32.9	32.3
13 Speed constant	rpm/V	278	285	290	296
14 Speed / torque gradient	rpm/mNm	29	39.5	47.2	55.4
15 Mechanical time constant	ms	2.31	3.16	3.77	4.43
16 Rotor inertia	gcm²	7.63	7.63	7.63	7.63

[1] Values in thermal steady state.

Specifications

Thermal data		
17 Thermal resistance housing-ambient		0.793 K/W
18 Thermal resistance winding-housing		0.754 K/W
19 Thermal time constant winding		4.78 s
20 Thermal time constant motor		40.2 s
21 Ambient temperature		-55 … +200°C
22 Max. permissible winding temperature		+240°C
Mechanical data (preloaded ball bearings)		
23 Max. permissible speed		20000 rpm
24 Axial play at axial load	< 5 N	0 mm
	> 5 N	max. 0.14 mm
25 Radial play		preloaded
26 Max. axial load (dynamic)		8 N
27 Max. force for press fits (static)		98 N
(static, shaft supported)		250 N
28 Max. radial loading, 5 mm from flange		16 N
Other specifications		
29 Number of pole pairs		1
30 Number of phases		3
31 Weight of motor (sensorless)		210 g

Connection A, motor cable PTFE (AWG 19)
red Motor winding 1
black Motor winding 2
white Motor winding 3
Connection A, sensors cable PTFE (AWG 24)
green VHall 4.5…24 V
blue GND
red Hall sensor 1
black Hall sensor 2
white Hall sensor 3
Connection B, motor cable PTFE (AWG 19)
red Motor winding 1
black Motor winding 2
white Motor winding 3

Operating Range

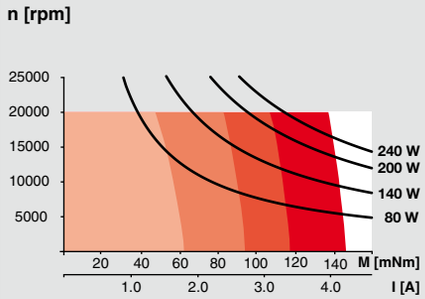

Comments

TA = 25°C
TA = 100°C
TA = 150°C
TA = 200°C

Continuous operation
In observation of above listed thermal resistance (lines 17 and 18) the maximum permissible winding temperature will be reached during continuous operation at 25°C ambient.
= Thermal limit.

Short term operation
The motor may be briefly overloaded (recurring).

Assigned power rating

Application

General
– extreme temperature applications
– vibration tested according to MIL-STD810F/Jan2000 Fig. 514.5C-10
– operation in oil and high pressure (only minimal lubrication, therefore use under rated ambient conditions is not suggested)

Oil & Gas Industry
– oil, gas and geothermal wells

Notice

This motor contains leaded solder. It therefore does not fulfill the requirements for the permitted maximum concentration of hazardous substances in accordance with the EC directive 2011/65/EC (RoHS) for all applications. The motor may therefore only be used for devices that are not subject to this directive.

Reference medium: Shell Tellus oil T15
Operation in oil of different viscosity will affect the motor data.

maxon modular system

Overview on page 20–25

Planetary Gearhead
∅22 mm
2.0 - 4.0 Nm
Page 267

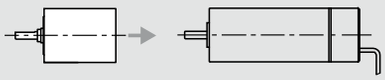

EC 25 ∅25 mm, brushless, 250 Watt

High Speed

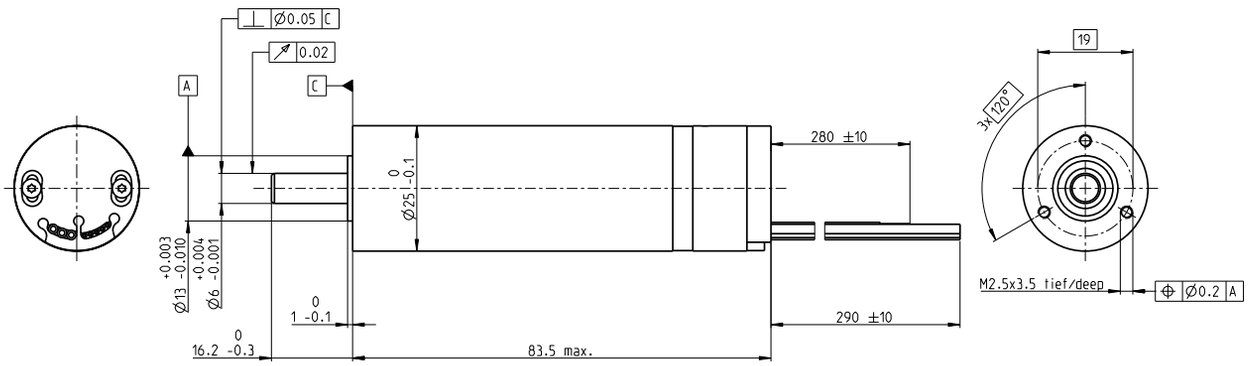

M 3:2

Stock program
Standard program
Special program (on request)

Part Numbers

	351144
Motor Data	
Values at nominal voltage	
1 Nominal voltage V	36
2 No load speed rpm	64100
3 No load current mA	242
4 Nominal speed rpm	62200
5 Nominal torque (max. continuous torque) mNm	35.1
6 Nominal current (max. continuous current) A	6.74
7 Stall torque mNm	1580
8 Starting current A	294
9 Max. efficiency %	94
Characteristics	
10 Terminal resistance phase to phase Ω	0.122
11 Terminal inductance phase to phase mH	0.014
12 Torque constant mNm/A	5.36
13 Speed constant rpm/V	1780
14 Speed/torque gradient rpm/mNm	40.6
15 Mechanical time constant ms	2.32
16 Rotor inertia gcm^2	5.45

Specifications

Thermal data

17	Thermal resistance housing-ambient	6.54 K/W
18	Thermal resistance winding-housing	0.1 K/W
19	Thermal time constant winding	0.509 s
20	Thermal time constant motor	332 s
21	Ambient temperature	-20…+100°C
22	Max. permissible winding temperature	+125°C

Mechanical data (preloaded ball bearings)

23	Max. permissible speed	70000 rpm
24	Axial play at axial load < 9 N	0 mm
	> 9 N	max. 0.14 mm
25	Radial play	0.025 mm
26	Max. axial load (dynamic)	7 N
27	Max. force for press fits (static)	87 N
	(static, shaft supported)	5000 N
28	Max. radial loading, 5 mm from flange	20 N

Other specifications

29	Number of pole pairs	1
30	Number of phases	3
31	Weight of motor	240 g

Values listed in the table are nominal.

Connection motor (Cable AWG 18)

red	Motor winding 1
black	Motor winding 2
white	Motor winding 3

Connection sensors (Cable AWG 26)

green	V_{Hall} 3…24 VDC
blue	GND
red/grey	Hall sensor 1
black/grey	Hall sensor 2
white/grey	Hall sensor 3

Operating Range

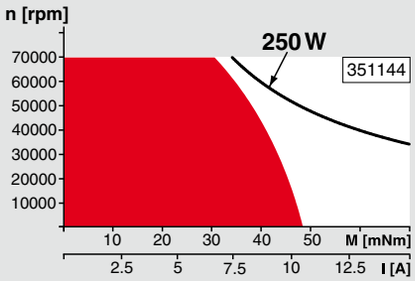

Comments

Continuous operation
In observation of above listed thermal resistance (lines 17 and 18) the maximum permissible winding temperature will be reached during continuous operation at 25°C ambient.
= Thermal limit.

Short term operation
The motor may be briefly overloaded (recurring).

Assigned power rating

maxon Modular System

Overview on page 20–25

Recommended Electronics:

ESCON Mod. 50/5	Page 343
ESCON 50/5	344
ESCON 70/10	344
Notes	**24**

EC 32 ∅32 mm, brushless, 80 Watt

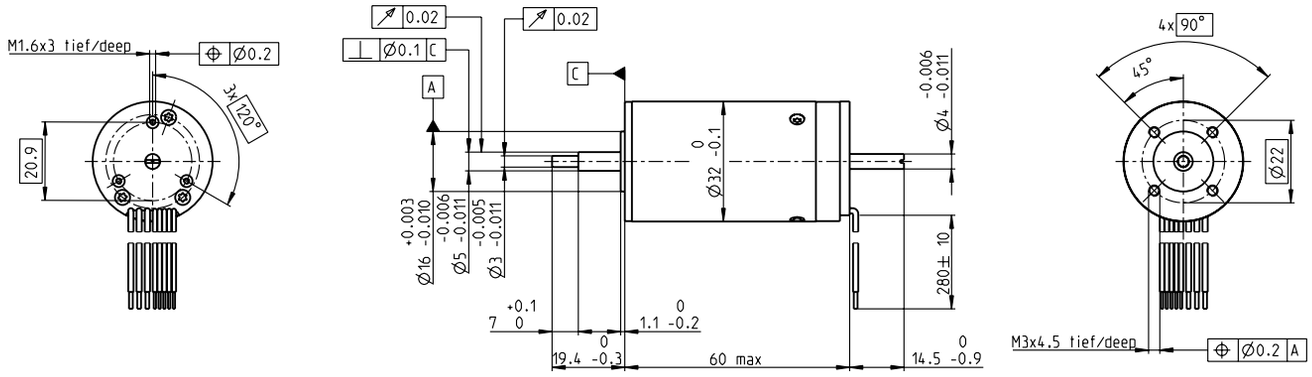

M 1:2

Stock program
Standard program
Special program (on request)

Part Numbers

Motor Data		118891	118892	118888	118889	118893	118890
Values at nominal voltage							
1 Nominal voltage	V	12	18	18	24	36	48
2 No load speed	rpm	15100	14300	13100	11000	14700	11300
3 No load current	mA	662	404	349	199	211	104
4 Nominal speed	rpm	13400	12700	11500	9450	13200	9740
5 Nominal torque (max. continuous torque)	mNm	44.6	45.2	45.9	47.2	43.8	45.9
6 Nominal current (max. continuous current)	A	6.51	4.15	3.82	2.46	2.07	1.23
7 Stall torque	mNm	428	443	407	355	454	353
8 Starting current	A	57.2	37.4	31.4	17.3	19.7	8.84
9 Max. efficiency	%	80	81	81	80	81	80
Characteristics							
10 Terminal resistance phase to phase	Ω	0.21	0.481	0.573	1.39	1.83	5.43
11 Terminal inductance phase to phase	mH	0.03	0.0752	0.09	0.226	0.285	0.856
12 Torque constant	mNm/A	7.48	11.8	13	20.5	23.1	40
13 Speed constant	rpm/V	1280	806	737	465	414	239
14 Speed/torque gradient	rpm/mNm	35.8	32.7	32.6	31.5	32.8	32.5
15 Mechanical time constant	ms	7.49	6.86	6.82	6.59	6.87	6.8
16 Rotor inertia	gcm²	20	20	20	20	20	20

Specifications

Thermal data

17	Thermal resistance housing-ambient	5.4 K/W
18	Thermal resistance winding-housing	2.5 K/W
19	Thermal time constant winding	14.8 s
20	Thermal time constant motor	1180 s
21	Ambient temperature	-20…+100°C
22	Max. permissible winding temperature	+125°C

Mechanical data (preloaded ball bearings)

23	Max. permissible speed[1]	25000 rpm
24	Axial play at axial load < 8 N	0 mm
	> 8 N	max. 0.14 mm
25	Radial play	preloaded
26	Max. axial load (dynamic)	5.6 N
27	Max. force for press fits (static)	98 N
	(static, shaft supported)	1200 N
28	Max. radial loading, 5 mm from flange	28 N

Other specifications

29	Number of pole pairs	1
30	Number of phases	3
31	Weight of motor	270 g

Values listed in the table are nominal.

Connection motor (Cable AWG 22)

red	Motor winding 1
black	Motor winding 2
white	Motor winding 3

Connection sensors (Cable AWG 26)[1]

green	V_{Hall} 4.5…24 VDC
blue	GND
red/grey	Hall sensor 1
black/grey	Hall sensor 2
white/grey	Hall sensor 3

Wiring diagram for Hall sensors see p. 33

[1] Not lead through in combination with resolver.

Operating Range

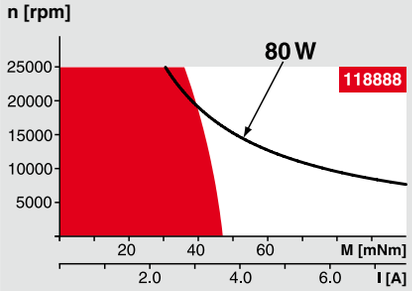

Comments

Continuous operation
In observation of above listed thermal resistance (lines 17 and 18) the maximum permissible winding temperature will be reached during continuous operation at 25°C ambient.
= Thermal limit.

Short term operation
The motor may be briefly overloaded (recurring).

Assigned power rating

maxon Modular System

Overview on page 20–25

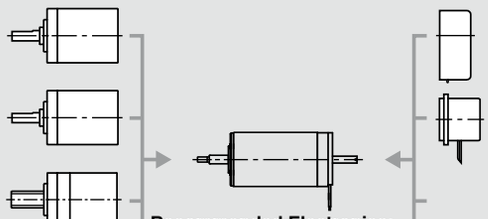

Planetary Gearhead
∅32 mm
0.75 - 4.5 Nm
Page 272

Planetary Gearhead
∅32 mm
0.75 - 6.0 Nm
Page 274–278

Spindle Drive
∅32 mm
Page 301–303

Encoder HED_5540
500 CPT,
3 channels
Page 326/328

Resolver Res 26
∅26 mm
10 V
Page 337

Recommended Electronics:

ESCON Mod. 50/5	Page 343
ESCON Mod. 50/4 EC-S	343
ESCON 50/5	344
ESCON 70/10	344
DEC Module 50/5	346
EPOS2 24/5, 50/5, 70/10	351
EPOS2 P 24/5	354
EPOS3 70/10 EtherCAT	357
MAXPOS 50/5	360
Notes	**24**

EC 40 ∅40 mm, brushless, 170 Watt

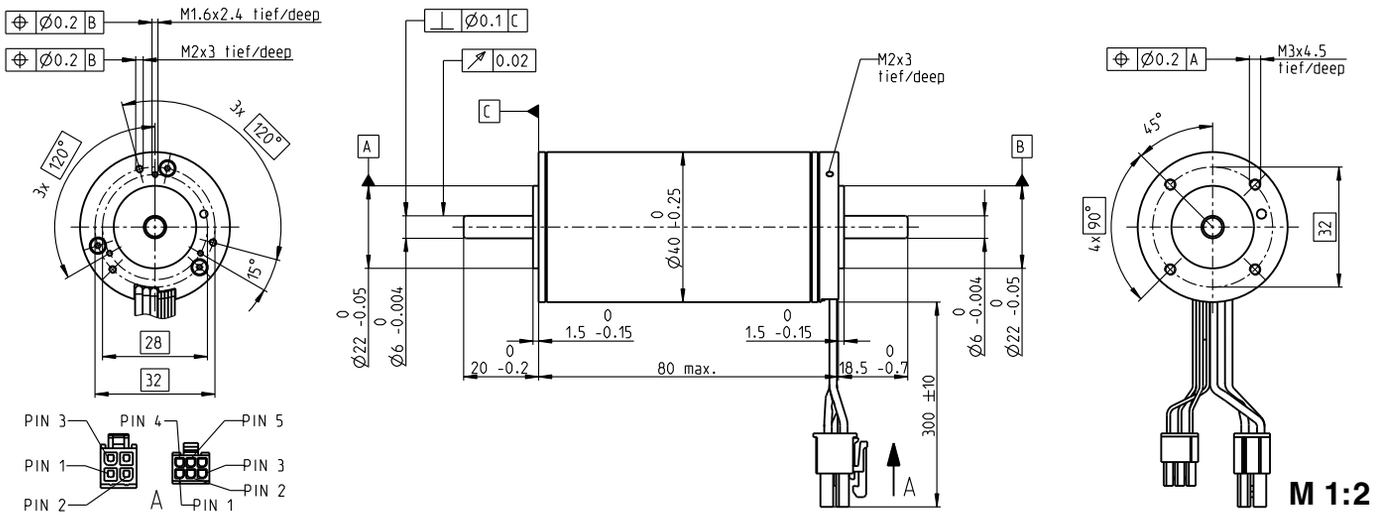

Stock program
Standard program
Special program (on request)

Part Numbers

Motor Data (provisional)		369146	393023	393024	393025
Values at nominal voltage					
1 Nominal voltage	V	15	24	42	48
2 No load speed	rpm	9840	9840	10100	9840
3 No load current	mA	617	386	230	193
4 Nominal speed	rpm	9090	9120	9380	9150
5 Nominal torque (max. continuous torque)	mNm	171	165	161	165
6 Nominal current (max. continuous current)	A	12.2	7.39	4.24	3.69
7 Stall torque	mNm	2620	2660	2740	2760
8 Starting current	A	181	115	69.1	59.6
9 Max. efficiency	%	89	89	89	89
Characteristics					
10 Terminal resistance phase to phase	Ω	0.0829	0.209	0.608	0.806
11 Terminal inductance phase to phase	mH	0.0329	0.0843	0.246	0.337
12 Torque constant	mNm/A	14.5	23.2	39.6	46.4
13 Speed constant	rpm/V	659	412	241	206
14 Speed/torque gradient	rpm/mNm	3.77	3.71	3.7	3.57
15 Mechanical time constant	ms	2.12	2.09	2.08	2.01
16 Rotor inertia	gcm^2	53.8	53.8	53.8	53.8

Specifications

Thermal data

17	Thermal resistance housing-ambient	5.21 K/W
18	Thermal resistance winding-housing	1.05 K/W
19	Thermal time constant winding	18.7 s
20	Thermal time constant motor	1910 s
21	Ambient temperature	-40…+100°C
22	Max. permissible winding temperature	+155°C

Mechanical data (preloaded ball bearings)

23	Max. permissible speed	18000 rpm
24	Axial play at axial load < 9 N	0 mm
	> 9 N	max. 0.14 mm
25	Radial play	preloaded
26	Max. axial load (dynamic)	23 N
27	Max. force for press fits (static)	106 N
	(static, shaft supported)	5500 N
28	Max. radial loading, 5 mm from flange	75 N

Other specifications

29	Number of pole pairs	1
30	Number of phases	3
31	Weight of motor	580 g

Values listed in the table are nominal.

Connection motor (Cable AWG 16)

red	Motor winding 1	Pin 1
black	Motor winding 2	Pin 2
white	Motor winding 3	Pin 3
	N.C.	Pin 4

Connector	**Part number**
Molex	39-01-2040

Connection sensors (Cable AWG 26)

yellow	Hall sensor 1	Pin 1
brown	Hall sensor 2	Pin 2
grey	Hall sensor 3	Pin 3
blue	GND	Pin 4
green	V_{Hall} 3…24 VDC	Pin 5
	N.C.	Pin 6

Connector	**Part number**
Molex	430-25-0600

Wiring diagram for Hall sensors see p. 33

Operating Range

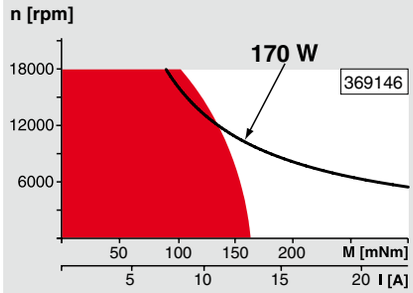

Comments

Continuous operation
In observation of above listed thermal resistance (lines 17 and 18) the maximum permissible winding temperature will be reached during continuous operation at 25°C ambient.
= Thermal limit.

Short term operation
The motor may be briefly overloaded (recurring).

Assigned power rating

maxon Modular System

Overview on page 20–25

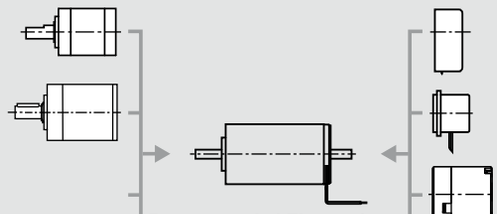

Planetary Gearhead
∅42 mm
3 - 15 Nm
Page 283

Planetary Gearhead
∅52 mm
4 - 30 Nm
Page 287

Encoder HED_5540
500 CPT,
3 channels
Page 326/328

Resolver Res 26
∅26 mm
10 V
Page 337

Brake AB 32
24 VDC
0.4 Nm
Page 374

Recommended Electronics:

ESCON Mod. 50/5	Page 343
ESCON Mod. 50/4 EC-S	343
ESCON 50/5	344
ESCON 70/10	344
DEC Module 50/5	346
EPOS2 24/5, 50/5, 70/10	351
EPOS2 P 24/5	354
EPOS3 70/10 EtherCAT	357
MAXPOS 50/5	360
Notes	**24**

EC 45 ∅45 mm, brushless, 150 Watt

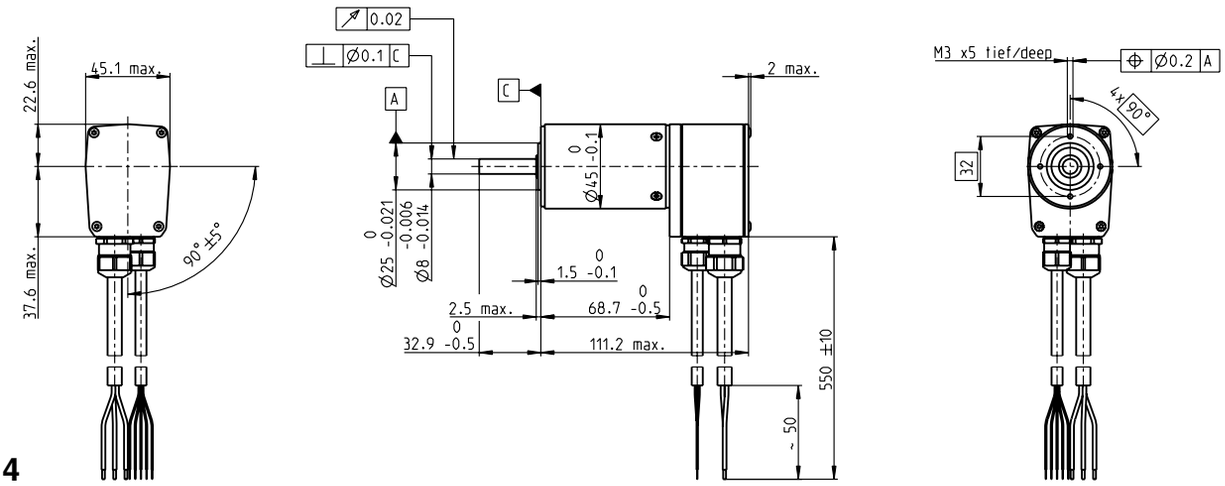

M 1:4

Stock program
Standard program
Special program (on request)

Part Numbers

		136202	136196	136203	136197	136204	136198	136205	136200	136206	136201
Motor Data											
Values at nominal voltage											
1 Nominal voltage	V	12	12	18	18	24	24	36	36	48	48
2 No load speed	rpm	9780	5650	10300	5930	10500	6090	9360	5400	10200	5860
3 No load current	mA	1530	577	1120	419	879	328	471	177	411	154
4 Nominal speed	rpm	8410	4370	9000	4680	9290	4840	8150	4190	8960	4640
5 Nominal torque (max. continuous torque)	mNm	174	186	171	184	169	183	179	191	174	187
6 Nominal current (max. continuous current)	A	16.2	9.65	11.2	6.72	8.55	5.13	5.29	3.14	4.21	2.52
7 Stall torque	mNm	1380	872	1540	931	1600	952	1560	911	1650	962
8 Starting current	A	119	43.6	93.3	32.6	74.8	25.6	43.1	14.5	37.2	12.5
9 Max. efficiency	%	79	79	80	79	80	79	81	80	81	80
Characteristics											
10 Terminal resistance phase to phase	Ω	0.101	0.275	0.193	0.552	0.321	0.936	0.836	2.48	1.29	3.85
11 Terminal inductance phase to phase	mH	0.0266	0.0797	0.0542	0.163	0.0917	0.275	0.263	0.788	0.395	1.19
12 Torque constant	mNm/A	11.5	20	16.5	28.6	21.4	37.1	36.3	62.8	44.5	77.1
13 Speed constant	rpm/V	827	478	579	334	445	257	263	152	214	124
14 Speed/torque gradient	rpm/mNm	7.22	6.58	6.78	6.46	6.67	6.49	6.07	6	6.22	6.18
15 Mechanical time constant	ms	8.99	8.19	8.44	8.05	8.32	8.08	7.56	7.48	7.75	7.7
16 Rotor inertia	gcm²	119	119	119	119	119	119	119	119	119	119

Specifications

Thermal data

17	Thermal resistance housing-ambient	1.9 K/W
18	Thermal resistance winding-housing	0.9 K/W
19	Thermal time constant winding	15.4 s
20	Thermal time constant motor	1600 s
21	Ambient temperature	-20…+100°C
22	Max. permissible winding temperature	+125°C

Mechanical data (preloaded ball bearings)

23	Max. permissible speed	15000 rpm
24	Axial play at axial load < 20 N	0 mm
	> 20 N	max. 0.14 mm
25	Radial play	preloaded
26	Max. axial load (dynamic)	16 N
27	Max. force for press fits (static)	182 N
	(static, shaft supported)	5000 N
28	Max. radial loading, 5 mm from flange	140 N

Other specifications

29	Number of pole pairs	1
30	Number of phases	3
31	Weight of motor	850 g
	Protection to	IP54*

Values listed in the table are nominal.

Connection motor (Cable AWG 16)

Cable 1	Motor winding 1
Cable 2	Motor winding 2
Cable 3	Motor winding 3

Connection sensors (Cable AWG 24)[1)]

white	Hall sensor 3
brown	Hall sensor 2
green	Hall sensor 1
yellow	GND
grey	V_{Hall} 4.5 … 24 VDC

Wiring diagram for Hall sensors see p. 33

[1)] Not lead through in combination with resolver.

Option

Temperature monitoring, PTC resistance Micropille 110°C, R 25°C < 0.5 kΩ, R 105°C = 1.2…1.5 kΩ, R 115°C = 7…13 kΩ, R 120°C = 18…35 kΩ

Operating Range

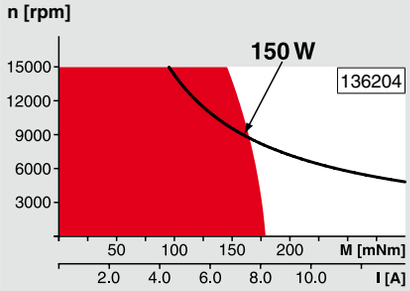

Comments

Continuous operation
In observation of above listed thermal resistance (lines 17 and 18) the maximum permissible winding temperature will be reached during continuous operation at 25°C ambient.
= Thermal limit.

Short term operation
The motor may be briefly overloaded (recurring).

Assigned power rating

maxon Modular System

Overview on page 20–25

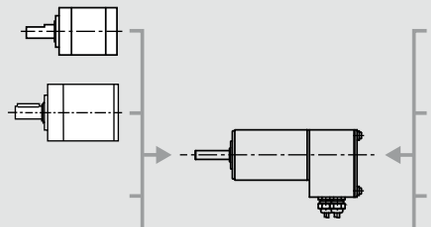

Planetary Gearhead
∅42 mm
3 - 15 Nm
Page 283

Planetary Gearhead
∅52 mm
4 - 30 Nm
Page 288

Encoder HEDL 9140
500 CPT,
3 channels
Page 331

Resolver Res 26
∅26 mm
10 V
Page 337

Brake AB 28
24 VDC
0.4 Nm
Page 373

Recommended Electronics:

ESCON Mod. 50/5	Page 343
ESCON Mod. 50/4 EC-S	343
ESCON 50/5	344
ESCON 70/10	344
DEC Module 50/5	346
EPOS2 50/5, 70/10	351
EPOS3 70/10 EtherCAT	357
MAXPOS 50/5	360
Notes	**24**

*Protection level only when installed with flange-side seal.

EC 45 ∅45 mm, brushless, 250 Watt

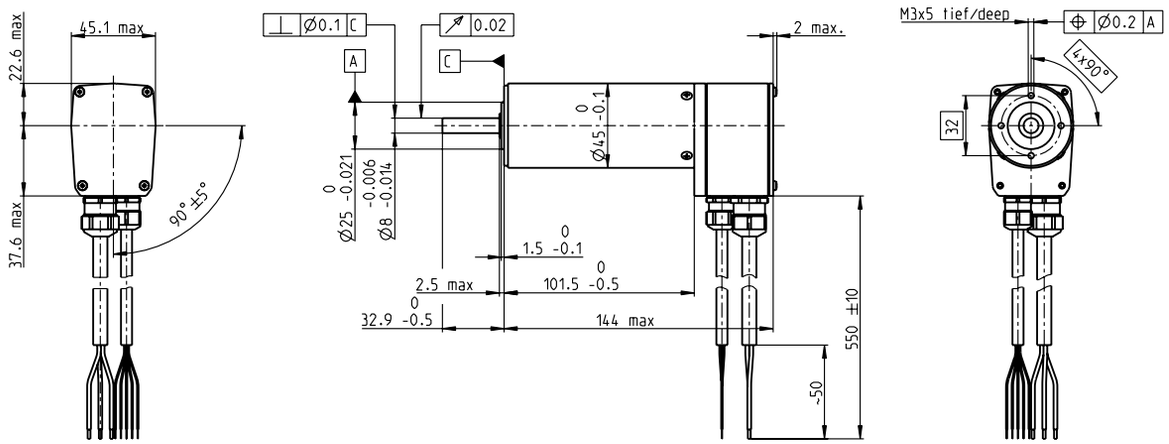

M 1:4

Stock program
Standard program
Special program (on request)

Part Numbers

Motor Data		136210	136207	136211	136208	136212	136209
Values at nominal voltage							
1 Nominal voltage	V	24	24	36	36	48	48
2 No load speed	rpm	8670	5000	10400	6010	10700	6160
3 No load current	mA	897	341	834	312	656	244
4 Nominal speed	rpm	7970	4300	9730	5320	10000	5490
5 Nominal torque (max. continuous torque)	mNm	311	331	312	341	316	347
6 Nominal current (max. continuous current)	A	12.5	7.51	10.2	6.21	7.94	4.86
7 Stall torque	mNm	4400	2540	5750	3320	6110	3530
8 Starting current	A	167	55.8	175	58.3	143	47.7
9 Max. efficiency	%	86	85	87	86	87	87
Characteristics							
10 Terminal resistance phase to phase	Ω	0.143	0.43	0.206	0.617	0.336	1.01
11 Terminal inductance phase to phase	mH	0.0565	0.17	0.0883	0.265	0.149	0.448
12 Torque constant	mNm/A	26.3	45.5	32.8	56.9	42.7	73.9
13 Speed constant	rpm/V	364	210	291	168	224	129
14 Speed/torque gradient	rpm/mNm	1.98	1.98	1.82	1.82	1.76	1.76
15 Mechanical time constant	ms	4.34	4.34	3.99	3.99	3.85	3.85
16 Rotor inertia	gcm^2	209	209	209	209	209	209

Specifications

Thermal data

17	Thermal resistance housing-ambient	1.7 K/W
18	Thermal resistance winding-housing	1.1 K/W
19	Thermal time constant winding	31 s
20	Thermal time constant motor	1570 s
21	Ambient temperature	-20…+100°C
22	Max. permissible winding temperature	+125°C

Mechanical data (preloaded ball bearings)

23	Max. permissible speed	12000 rpm
24	Axial play at axial load < 20 N	0 mm
	> 20 N	max. 0.15 mm
25	Radial play	preloaded
26	Max. axial load (dynamic)	16 N
27	Max. force for press fits (static)	182 N
	(static, shaft supported)	5000 N
28	Max. radial loading, 5 mm from flange	180 N

Other specifications

29	Number of pole pairs	1
30	Number of phases	3
31	Weight of motor	1150 g
	Protection to	IP54*

Values listed in the table are nominal.

Connection motor (Cable AWG 16)

Cable 1	Motor winding 1
Cable 2	Motor winding 2
Cable 3	Motor winding 3

Connection sensors (Cable AWG 24)[1)]

white	Hall sensor 3
brown	Hall sensor 2
green	Hall sensor 1
yellow	GND
grey	V_{Hall} 4.5…24 VDC

Wiring diagram for Hall sensors see p. 33

[1)] Not lead through in combination with resolver.

Option

Temperature monitoring, PTC resistance Micropille 110°C, R 25°C < 0.5 kΩ, R 105°C = 1.2…1.5 kΩ, R 115°C = 7…13 kΩ, R 120°C = 18…35 kΩ

Operating Range

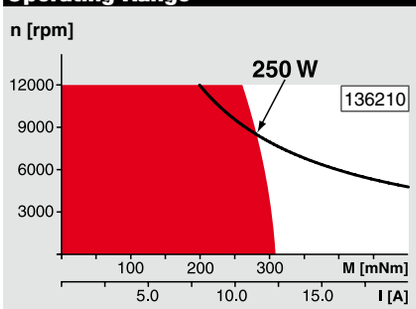

Comments

Continuous operation
In observation of above listed thermal resistance (lines 17 and 18) the maximum permissible winding temperature will be reached during continuous operation at 25°C ambient.
= Thermal limit.

Short term operation
The motor may be briefly overloaded (recurring).

Assigned power rating

maxon Modular System

Overview on page 20–25

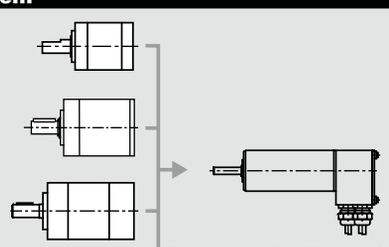

Planetary Gearhead
∅42 mm
3 - 15 Nm
Page 283

Planetary Gearhead
∅52 mm
4 - 30 Nm
Page 288

Planetary Gearhead
∅62 mm
8 - 50 Nm
Page 289

Encoder HEDL 9140
500 CPT,
3 channels
Page 331

Resolver Res 26
∅26 mm
10 V
Page 337

Brake AB 28
24 VDC
0.4 Nm
Page 373

Recommended Electronics:

ESCON Mod. 50/5	Page 343
ESCON Mod. 50/4 EC-S	343
ESCON 50/5	344
ESCON 70/10	344
DEC Module 50/5	346
EPOS2 50/5, 70/10	351
EPOS3 70/10 EtherCAT	357
MAXPOS 50/5	360
Notes	**24**

*Protection level only when installed with flange-side seal.

EC 60 ∅60 mm, brushless, 400 Watt

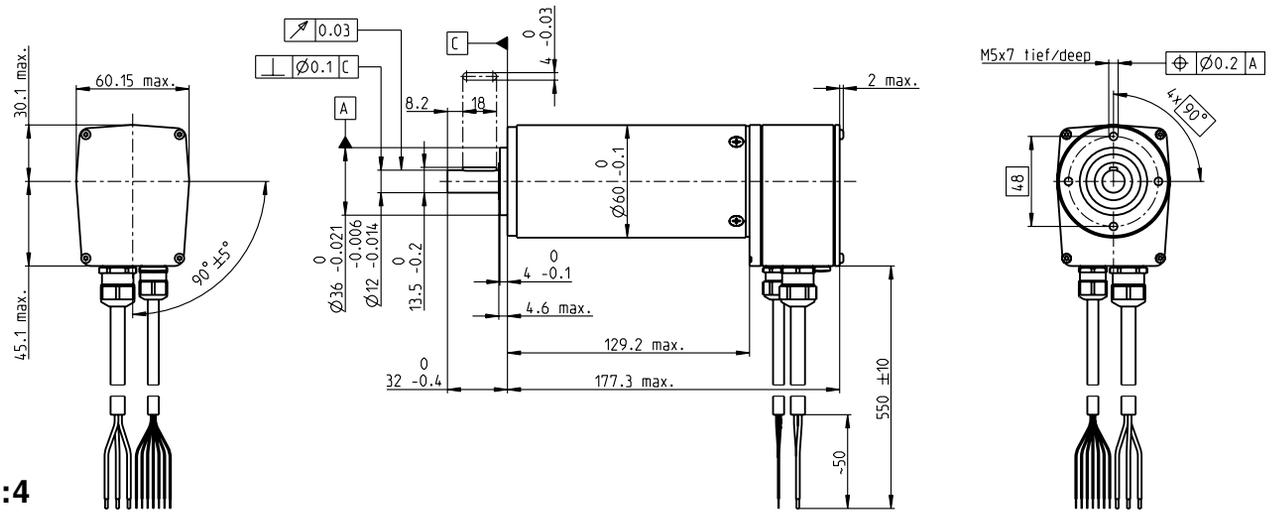

M 1:4

Stock program
Standard program
Special program (on request)

Part Numbers

		167132	167131
Motor Data			
Values at nominal voltage			
1 Nominal voltage	V	48	48
2 No load speed	rpm	5370	3100
3 No load current	mA	733	304
4 Nominal speed	rpm	4960	2680
5 Nominal torque (max. continuous torque)	mNm	747	830
6 Nominal current (max. continuous current)	A	9.38	5.85
7 Stall torque	mNm	11800	6820
8 Starting current	A	139	46.4
9 Max. efficiency	%	86	85
Characteristics			
10 Terminal resistance phase to phase	Ω	0.345	1.03
11 Terminal inductance phase to phase	mH	0.273	0.82
12 Torque constant	mNm/A	84.9	147
13 Speed constant	rpm/V	113	65
14 Speed/torque gradient	rpm/mNm	0.457	0.457
15 Mechanical time constant	ms	3.98	3.98
16 Rotor inertia	gcm^2	831	831

Specifications

Thermal data

17	Thermal resistance housing-ambient	1.3 K/W
18	Thermal resistance winding-housing	0.5 K/W
19	Thermal time constant winding	33.9 s
20	Thermal time constant motor	1200 s
21	Ambient temperature	-20…+100°C
22	Max. permissible winding temperature	+125°C

Mechanical data (preloaded ball bearings)

23	Max. permissible speed	7000 rpm
24	Axial play at axial load < 30 N	0 mm
	> 30 N	max. 0.14 mm
25	Radial play	preloaded
26	Max. axial load (dynamic)	24 N
27	Max. force for press fits (static)	392 N
	(static, shaft supported)	6000 N
28	Max. radial loading, 5 mm from flange	240 N

Other specifications

29	Number of pole pairs	1
30	Number of phases	3
31	Weight of motor	2450 g
	Protection to	IP54*

Values listed in the table are nominal.

Connection motor (Cable AWG 16)

Cable 1	Motor winding 1
Cable 2	Motor winding 2
Cable 3	Motor winding 3

Connection sensors (Cable AWG 24)[1)]

white	Hall sensor 3
brown	Hall sensor 2
green	Hall sensor 1
yellow	GND
grey	V_{Hall} 4.5 … 24 VDC
blue	Temperature sensor (PTC)
pink	Temperature sensor (PTC)

[1)] Not lead through in combination with resolver.

Temperature monitoring, PTC resistance Micropille 110°C, R 25°C < 0.5 kΩ, R 105°C = 1.2…1.5 kΩ, R 115°C = 7…13 kΩ, R 120°C = 18…35 kΩ

Wiring diagram for Hall sensors see p. 33

Operating Range

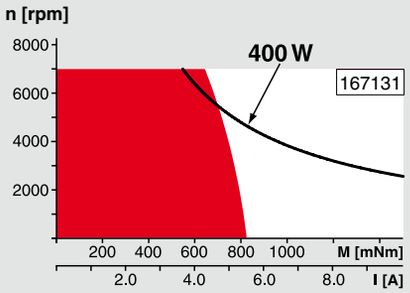

Comments

Continuous operation
In observation of above listed thermal resistance (lines 17 and 18) the maximum permissible winding temperature will be reached during continuous operation at 25°C ambient.
= Thermal limit.

Short term operation
The motor may be briefly overloaded (recurring).

Assigned power rating

maxon Modular System

Overview on page 20–25

Planetary Gearhead
∅81 mm
20 - 120 Nm
Page 290

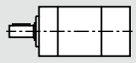

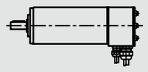

Encoder HEDL 9140
500 CPT,
3 channels
Page 331

Resolver Res
∅26 mm
10 V
Page 337

Brake AB 41
24 VDC
2.0 Nm
Page 375

Recommended Electronics:

ESCON Mod. 50/5	Page 343
ESCON Mod. 50/4 EC-S	343
ESCON 50/5	344
ESCON 70/10	344
DEC Module 50/5	346
EPOS2 70/10	351
EPOS3 70/10 EtherCAT	357
MAXPOS 50/5	360
Notes	**24**

*Protection level only when installed with flange-side seal.

maxon EC-max

maxon EC-max

The maxon EC-max program picks up the ideology of the successful A-max and RE-max motors. The electronically commutated DC motors are based on the same parts platform idea, creating a wide market-oriented range in the modular system with gearheads, sensors and brakes.

Summary	198
EC-max motors 16–40 mm in diameter	199–207

maxon EC-max program

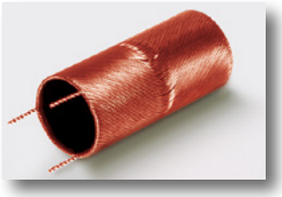

The “heart” is the ironless winding, System maxon®. This means physically dependent – advantages like no detent, high efficiency and excellent regulating dynamics.

The motor housing, a simple tube made of stainless steel – non magnetic, rigid, rust-proof.

Metallic housing and flange allow good heat dissipation and mechanical stability.

Shaft with no groove guarantees torsional stability and smooth running.

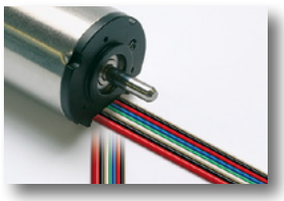

Non-tension cables can be directed both radially and axially from the motor. Wide range of plug options.

High quality, thanks to a process monitored production on the most modern assembly lines which are, in part, developed by maxon.

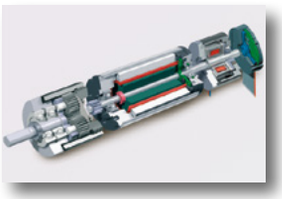

Modular construction with gears, sensors and brakes.

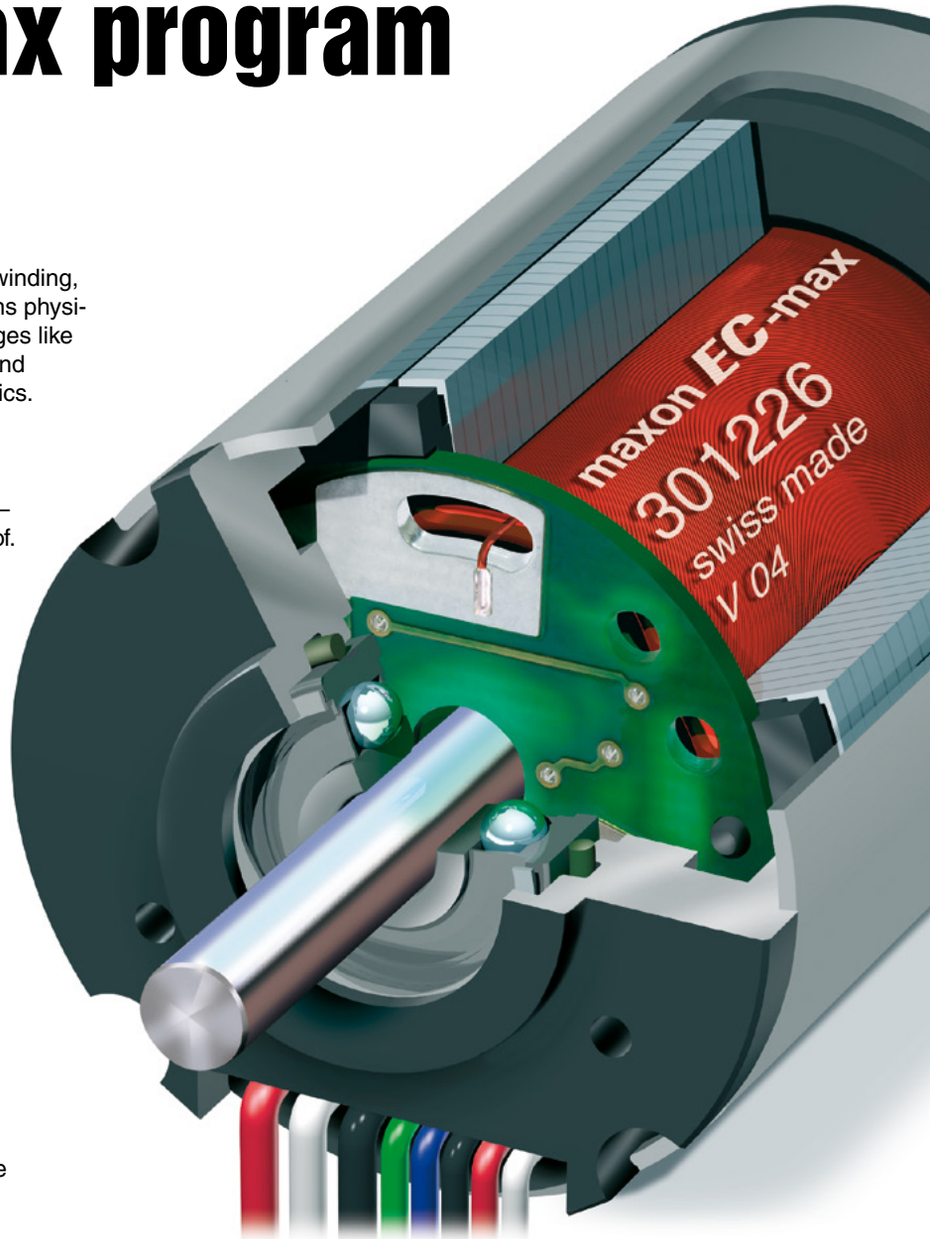

The modular EC-motor program with an impressive price/ performance ratio

EC-max 16 ∅16 mm, brushless, 5 Watt

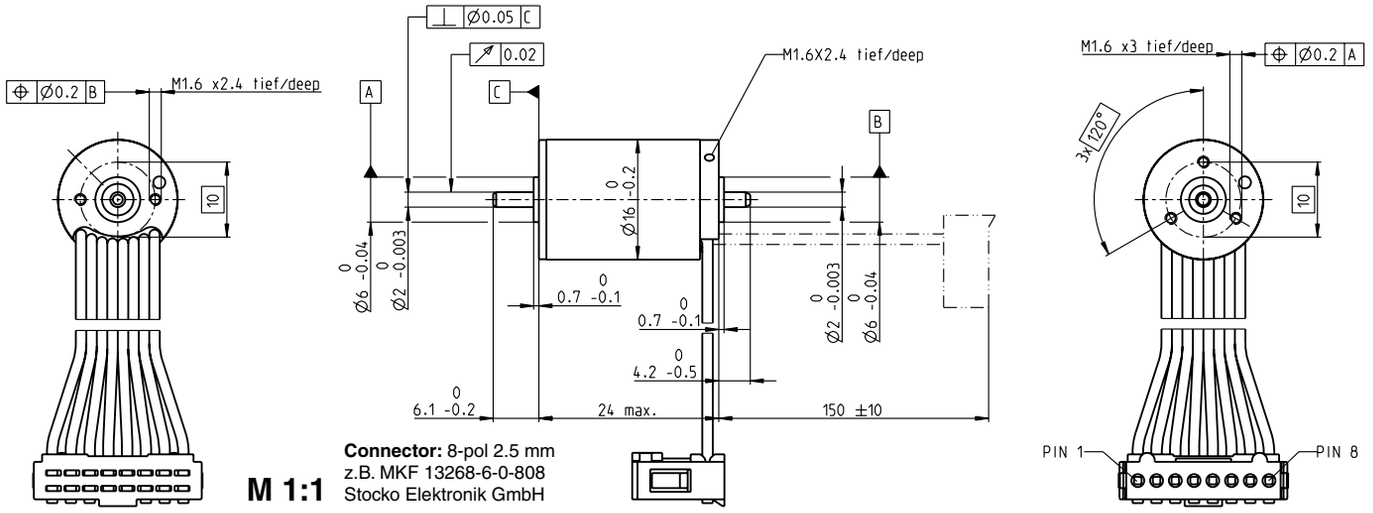

M 1:1

Connector: 8-pol 2.5 mm
z.B. MKF 13268-6-0-808
Stocko Elektronik GmbH

Stock program
Standard program
Special program (on request)

Part Numbers

Motor Data		283825	283826	283827	283828
Values at nominal voltage					
1 Nominal voltage	V	4.5	6	9	12
2 No load speed	rpm	12800	13500	12600	13500
3 No load current	mA	148	120	72.4	60.2
4 Nominal speed	rpm	5170	5690	4920	5840
5 Nominal torque (max. continuous torque)	mNm	3.33	3.2	3.29	3.23
6 Nominal current (max. continuous current)	A	1.18	0.903	0.574	0.456
7 Stall torque	mNm	5.82	5.79	5.64	5.95
8 Starting current	A	1.89	1.49	0.901	0.762
9 Max. efficiency	%	53	53	53	53
Characteristics					
10 Terminal resistance phase to phase	Ω	2.38	4.04	9.99	15.7
11 Terminal inductance phase to phase	mH	0.0396	0.0634	0.163	0.254
12 Torque constant	mNm/A	3.08	3.9	6.26	7.8
13 Speed constant	rpm/V	3100	2450	1530	1220
14 Speed/torque gradient	rpm/mNm	2390	2540	2440	2470
15 Mechanical time constant	ms	10.7	11.4	10.9	11.1
16 Rotor inertia	gcm^2	0.428	0.428	0.428	0.428

Specifications

Thermal data

17	Thermal resistance housing-ambient	23.5 K/W
18	Thermal resistance winding-housing	2.57 K/W
19	Thermal time constant winding	0.943 s
20	Thermal time constant motor	390 s
21	Ambient temperature	-40…+100°C
22	Max. permissible winding temperature	+155°C

Mechanical data (preloaded ball bearings)

23	Max. permissible speed	20000 rpm
24	Axial play at axial load < 1.5 N	0 mm
	> 1.5 N	0.14 mm
25	Radial play	preloaded
26	Max. axial load (dynamic)	1 N
27	Max. force for press fits (static)	18 N
	(static, shaft supported)	600 N
28	Max. radial loading, 5 mm from flange	6 N

Other specifications

29	Number of pole pairs	1
30	Number of phases	3
31	Weight of motor	36 g

Values listed in the table are nominal.

Connection (Cable AWG 24)

brown	Motor winding 1	Pin 1
red	Motor winding 2	Pin 2
orange	Motor winding 3	Pin 3
yellow	V_{Hall} 3…24 VDC	Pin 4
green	GND	Pin 5
blue	Hall sensor 1	Pin 6
violet	Hall sensor 2	Pin 7
grey	Hall sensor 3	Pin 8

Wiring diagram for Hall sensors see p. 33

Operating Range

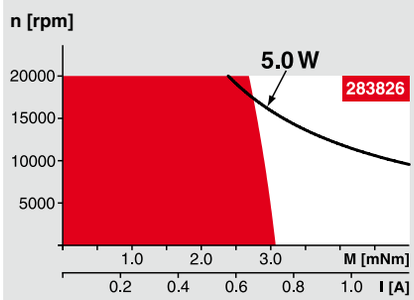

Comments

Continuous operation
In observation of above listed thermal resistance (lines 17 and 18) the maximum permissible winding temperature will be reached during continuous operation at 25°C ambient.
= Thermal limit.

Short term operation
The motor may be briefly overloaded (recurring).

Assigned power rating

maxon Modular System

Overview on page 20 - 25

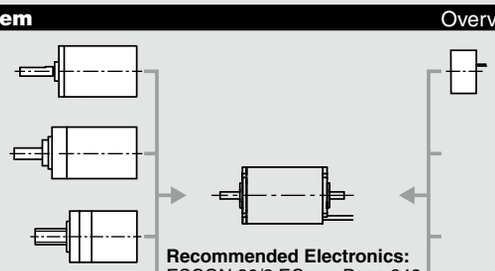

Planetary Gearhead
∅16 mm
0.1 - 0.3 Nm
Page 254

Planetary Gearhead
∅16 mm
0.2 - 0.6 Nm
Page 255

Spindle Drive
∅16 mm
Page 296–298

Encoder MR
128/256/512 CPT,
2/3 channels
Page 318

Recommended Electronics:

ESCON 36/3 EC	Page 342
ESCON Mod. 50/4 EC-S	343
ESCON Module 50/5	343
ESCON 50/5	344
DEC Module 24/2	346
EPOS2 24/2	350
EPOS2 Module 36/2	350
EPOS3 70/10 EtherCAT	357
MAXPOS 50/5	360
Notes	**24**

EC-max 16 2-wire ∅16 mm, brushless, 5 Watt

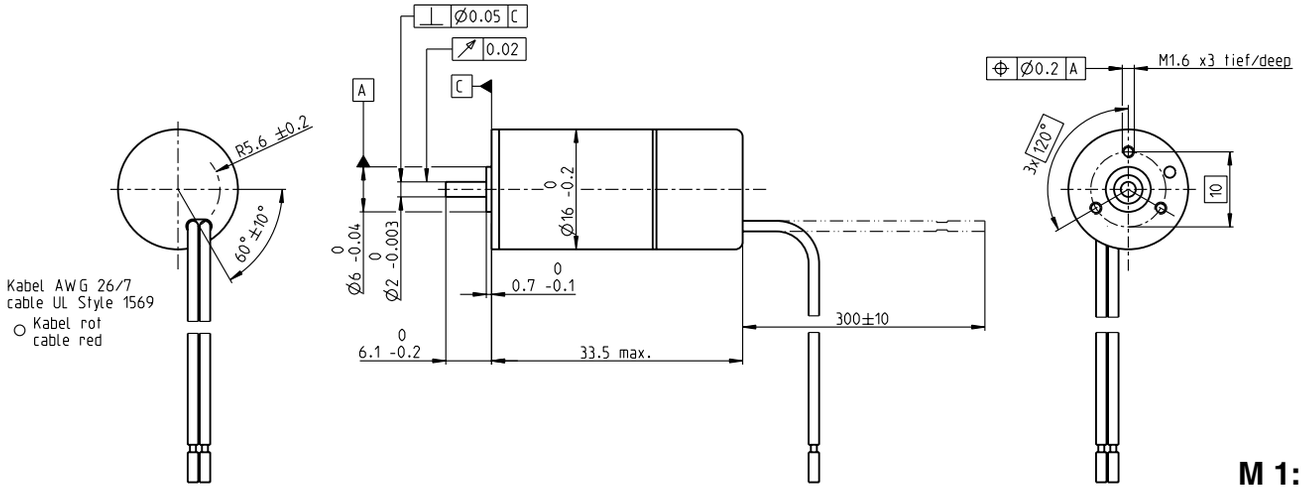

Stock program
Standard program
Special program (on request)

Part Numbers

		320816	320817	320818	320819
Motor Data					
Values at nominal voltage					
1 Nominal voltage	V	5	6	9	12
2 No load speed	rpm	14400	13700	12800	13800
3 No load current	mA	156	124	82.9	72.7
4 Nominal speed	rpm	8250	7490	6960	8080
5 Nominal torque (max. continuous torque)	mNm	2.25	2.25	2.33	2.26
6 Nominal current (max. continuous current)	A	0.907	0.716	0.467	0.37
7 Stall torque	mNm	4.61	5.25	5.39	5.76
8 Starting current	A	1.7	1.44	0.929	0.801
9 Max. efficiency	%	50	49	49	49
Characteristics					
35 Type of control		controlled	controlled	controlled	controlled
36 Supply voltage +Vcc	V	5…15	5…15	5…15	5…15
12 Torque constant	mNm/A	3.06	3.87	6.21	7.73
13 Speed constant	rpm/V	3130	2470	1540	1230
14 Speed/torque gradient	rpm/mNm	2440	2580	2480	2510
15 Mechanical time constant	ms	10.9	11.6	11.1	11.3
16 Rotor inertia	gcm²	0.428	0.428	0.428	0.428
39 Speed range	rpm	14400-44700	11300-35200	6840-21800	5360-17400

Specifications

Thermal data

17	Thermal resistance housing-ambient	23.5 K/W
18	Thermal resistance winding-housing	2.57 K/W
19	Thermal time constant winding	0.943 s
20	Thermal time constant motor	390 s
21	Ambient temperature	-40…+85°C
22	Max. temperature of electronics (max. loading capacity of the motor is defined by the electronics)	+100°C

Mechanical data (preloaded ball bearings)

23	Max. permissible speed	20000 rpm
24	Axial play at axial load < 1.5 N	0 mm
	> 1.5 N	0.14 mm
25	Radial play	preloaded
26	Max. axial load (dynamic)	1 N
27	Max. force for press fits (static)	18 N
28	Max. radial loading, 5 mm from flange	6 N

Other specifications

31	Weight of motor	32 g
	Direction of rotation	Clockwise (CW)

Values listed in the table are nominal.

Connection (Cable AWG 26/7 UL Style 1569)
red $+V_{CC}$
black GND

Protective functions

Inverse-polarity protection up to max.	18 VDC
Blockage protection at speed	< 76 rpm
Temperature monitoring	> 104°C
Current limitation	1.6 A ± 15%
Low voltage monitoring	< 4 VDC

⚠ **Attention:** Operating voltage V_{CC} > 18 VDC will destroy the electronics

Option: Sense of rotation counter-clockwise (CCW)

Operating Range

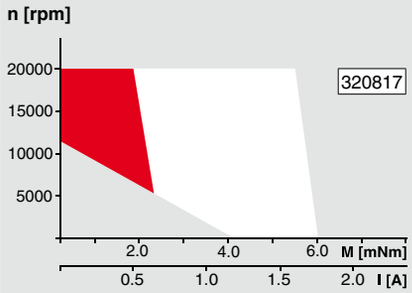

Comments

Continuous operation
In observation of above listed thermal resistance (lines 17 and 18) the maximum permissible winding temperature will be reached during continuous operation at 25°C ambient.
= Thermal limit.

Short term operation
The motor may be briefly overloaded (recurring).

Assigned power rating

maxon Modular System

Overview on page 20 - 25

Planetary Gearhead
∅16 mm
0.1 - 0.3 Nm
Page 254

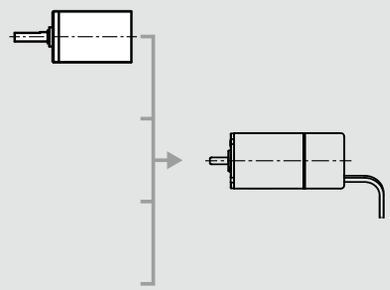

EC-max 16 ∅16 mm, brushless, 8 Watt

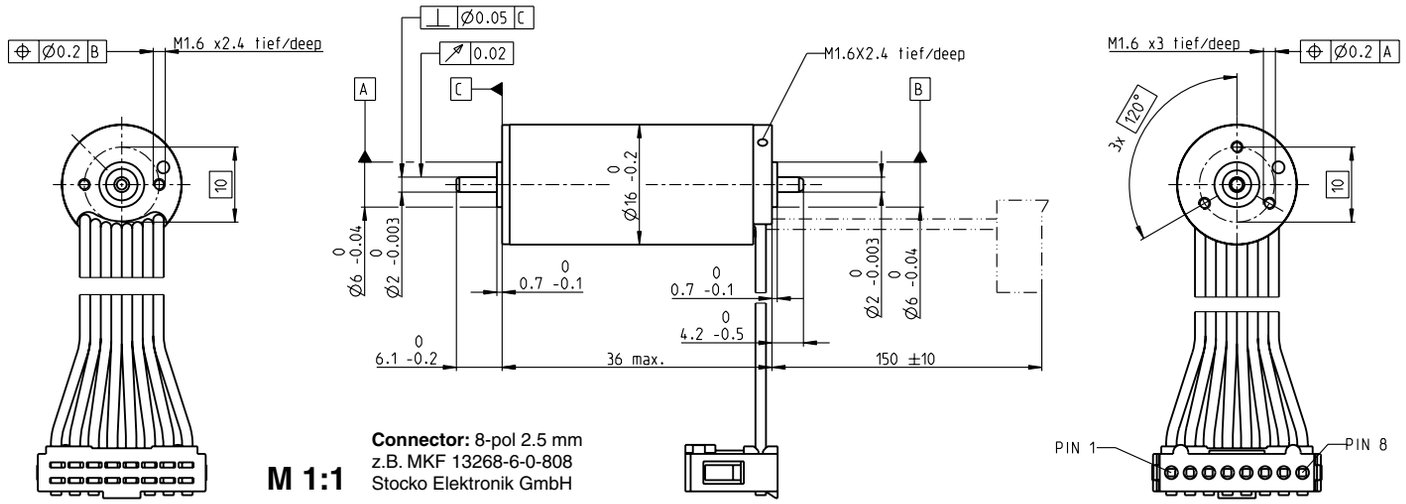

M 1:1

Connector: 8-pol 2.5 mm
z.B. MKF 13268-6-0-808
Stocko Elektronik GmbH

Stock program
Standard program
Special program (on request)

Part Numbers

		283831	283832	283833	283834	283835
Motor Data						
Values at nominal voltage						
1 Nominal voltage	V	6	9	12	18	24
2 No load speed	rpm	12000	11900	11900	11900	11900
3 No load current	mA	130	85.1	64.2	42.6	31.9
4 Nominal speed	rpm	7120	7090	7300	7170	7350
5 Nominal torque (max. continuous torque)	mNm	7.66	7.8	8.02	7.87	8.19
6 Nominal current (max. continuous current)	A	1.76	1.17	0.909	0.593	0.461
7 Stall torque	mNm	19.2	19.8	21.1	20.3	22
8 Starting current	A	4.17	2.82	2.27	1.45	1.17
9 Max. efficiency	%	69	69	70	70	71
Characteristics						
10 Terminal resistance phase to phase	Ω	1.44	3.19	5.3	12.4	20.5
11 Terminal inductance phase to phase	mH	0.0343	0.0793	0.14	0.317	0.566
12 Torque constant	mNm/A	4.61	7.02	9.32	14	18.7
13 Speed constant	rpm/V	2070	1360	1020	681	510
14 Speed/torque gradient	rpm/mNm	646	619	582	602	556
15 Mechanical time constant	ms	5.75	5.51	5.18	5.36	4.95
16 Rotor inertia	gcm^2	0.85	0.85	0.85	0.85	0.85

Specifications

Thermal data

17	Thermal resistance housing-ambient	17.7 K/W
18	Thermal resistance winding-housing	1.41 K/W
19	Thermal time constant winding	0.9 s
20	Thermal time constant motor	427 s
21	Ambient temperature	-40…+100°C
22	Max. permissible winding temperature	+155°C

Mechanical data (preloaded ball bearings)

23	Max. permissible speed	20000 rpm
24	Axial play at axial load < 1.5 N	0 mm
	> 1.5 N	0.14 mm
25	Radial play	preloaded
26	Max. axial load (dynamic)	1 N
27	Max. force for press fits (static)	18 N
	(static, shaft supported)	400 N
28	Max. radial loading, 5 mm from flange	6 N

Other specifications

29	Number of pole pairs	1
30	Number of phases	3
31	Weight of motor	52 g

Values listed in the table are nominal.

Connection (Cable AWG 24)

brown	Motor winding 1	Pin 1
red	Motor winding 2	Pin 2
orange	Motor winding 3	Pin 3
yellow	V_{Hall} 3…24 VDC	Pin 4
green	GND	Pin 5
blue	Hall sensor 1	Pin 6
violet	Hall sensor 2	Pin 7
grey	Hall sensor 3	Pin 8

Wiring diagram for Hall sensors see p. 33

Operating Range

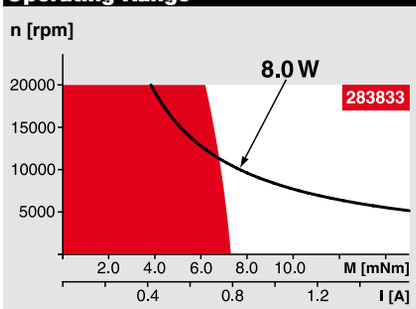

Comments

Continuous operation
In observation of above listed thermal resistance (lines 17 and 18) the maximum permissible winding temperature will be reached during continuous operation at 25°C ambient.
= Thermal limit.

Short term operation
The motor may be briefly overloaded (recurring).

Assigned power rating

maxon Modular System

Overview on page 20 - 25

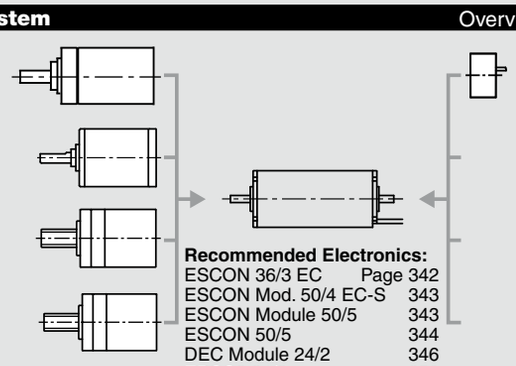

Planetary Gearhead
∅16 mm
0.2 - 0.6 Nm
Page 255

Planetary Gearhead
∅22 mm
0.5 - 2.0 Nm
Page 265

Spindle Drive
∅16 mm
Page 296–298

Spindle Drive
∅22 mm
Page 299/300

Encoder MR
128/256/512 CPT,
2/3 channels
Page 318

Recommended Electronics:

ESCON 36/3 EC	Page 342
ESCON Mod. 50/4 EC-S	343
ESCON Module 50/5	343
ESCON 50/5	344
DEC Module 24/2	346
EPOS2 24/2	350
EPOS2 Module 36/2	350
EPOS3 70/10 EtherCAT	357
MAXPOS 50/5	360
Notes	**24**

EC-max 22 ∅22 mm, brushless, 12 Watt

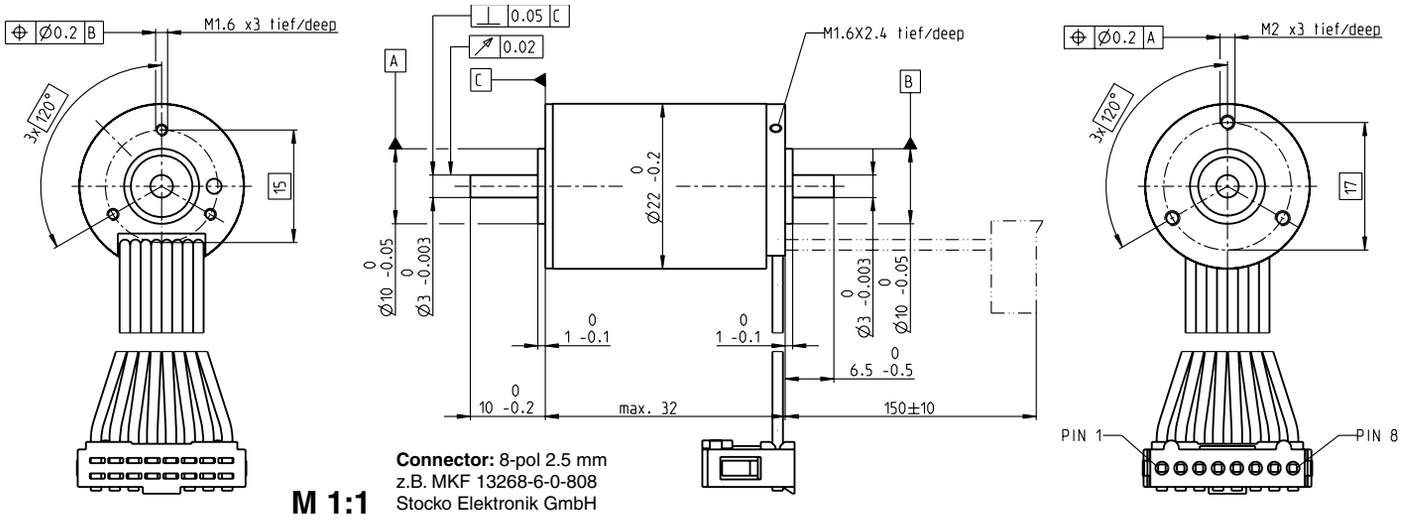

Connector: 8-pol 2.5 mm
z.B. MKF 13268-6-0-808
Stocko Elektronik GmbH

M 1:1

Stock program
Standard program
Special program (on request)

Part Numbers

Motor Data		283837	283838	283839	283840	283841
Values at nominal voltage						
1 Nominal voltage	V	6	12	18	24	36
2 No load speed	rpm	11400	12100	12100	12100	12100
3 No load current	mA	282	155	103	77.3	51.6
4 Nominal speed	rpm	7230	8040	8250	8250	8210
5 Nominal torque (max. continuous torque)	mNm	10.5	10.2	10.9	10.8	10.6
6 Nominal current (max. continuous current)	A	2.41	1.25	0.88	0.657	0.432
7 Stall torque	mNm	30	31.3	35.4	35.1	34.1
8 Starting current	A	6.23	3.47	2.6	1.94	1.25
9 Max. efficiency	%	63	63	65	65	65
Characteristics						
10 Terminal resistance phase to phase	Ω	0.963	3.46	6.93	12.4	28.7
11 Terminal inductance phase to phase	mH	0.0343	0.121	0.275	0.488	1.09
12 Torque constant	mNm/A	4.81	9.02	13.6	18.1	27.2
13 Speed constant	rpm/V	1990	1060	701	526	352
14 Speed/torque gradient	rpm/mNm	397	406	356	360	371
15 Mechanical time constant	ms	9.36	9.56	8.39	8.47	8.75
16 Rotor inertia	gcm²	2.25	2.25	2.25	2.25	2.25

Specifications

Thermal data		
17 Thermal resistance housing-ambient		13.5 K/W
18 Thermal resistance winding-housing		1.72 K/W
19 Thermal time constant winding		1.69 s
20 Thermal time constant motor		567 s
21 Ambient temperature		-40…+100°C
22 Max. permissible winding temperature		+155°C
Mechanical data (preloaded ball bearings)		
23 Max. permissible speed		18000 rpm
24 Axial play at axial load	< 4 N	0 mm
	> 4 N	0.14 mm
25 Radial play		preloaded
26 Max. axial load (dynamic)		3.5 N
27 Max. force for press fits (static)		53 N
(static, shaft supported)		1400 N
28 Max. radial loading, 5 mm from flange		16 N
Other specifications		
29 Number of pole pairs		1
30 Number of phases		3
31 Weight of motor		83 g

Values listed in the table are nominal.

Connection (Cable AWG 24)

brown	Motor winding 1	Pin 1
red	Motor winding 2	Pin 2
orange	Motor winding 3	Pin 3
yellow	V_{Hall} 3…24 VDC	Pin 4
green	GND	Pin 5
blue	Hall sensor 1	Pin 6
violet	Hall sensor 2	Pin 7
grey	Hall sensor 3	Pin 8

Wiring diagram for Hall sensors see p. 33

Operating Range

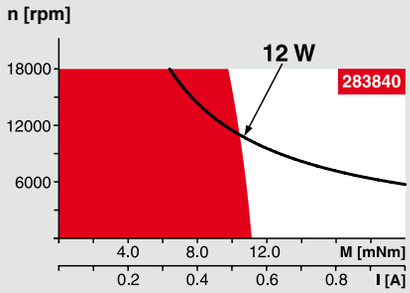

Comments

Continuous operation
In observation of above listed thermal resistance (lines 17 and 18) the maximum permissible winding temperature will be reached during continuous operation at 25°C ambient.
= Thermal limit.

Short term operation
The motor may be briefly overloaded (recurring).

Assigned power rating

maxon Modular System

Overview on page 20 - 25

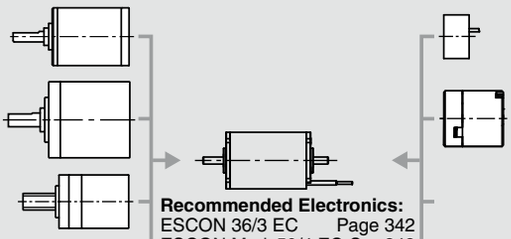

Planetary Gearhead
∅22 mm
0.5 - 3.4 Nm
Page 265/266

Koaxdrive
∅32 mm
1.0 - 4.5 Nm
Page 281

Spindle Drive
∅22 mm
Page 299/300

Recommended Electronics:

ESCON 36/3 EC	Page 342
ESCON Mod. 50/4 EC-S	343
ESCON Module 50/5	343
ESCON 50/5	344
DEC Module 24/2, 50/5	346
EPOS2 24/2, Module 36/2	350
EPOS2 24/5, 50/5	351
EPOS2 P 24/5	354
EPOS3 70/10 EtherCAT	357
MAXPOS 50/5	360
Notes	**24**

Encoder MR
128/256/512 CPT,
2/3 channels
Page 318

Brake AB 20
24 VDC
0.1 Nm
Page 370

EC-max 22 ∅22 mm, brushless, 25 Watt

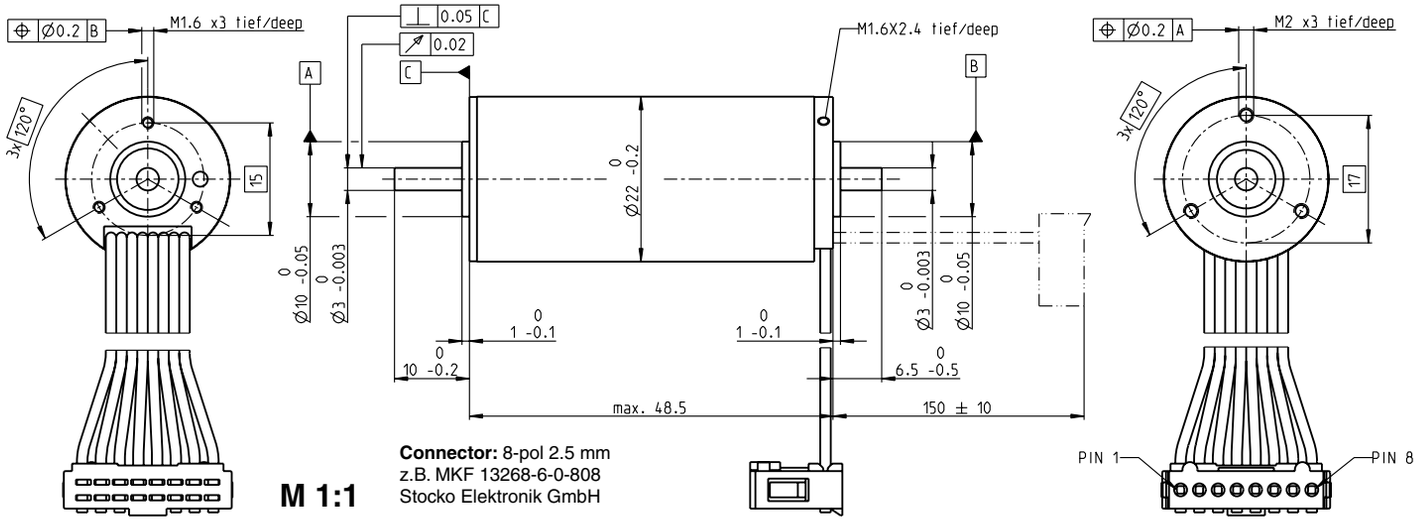

M 1:1

Connector: 8-pol 2.5 mm
z.B. MKF 13268-6-0-808
Stocko Elektronik GmbH

Stock program
Standard program
Special program (on request)

Part Numbers

Motor Data		283856	283857	283858	283859	283860
Values at nominal voltage						
1 Nominal voltage	V	12	18	24	36	48
2 No load speed	rpm	12400	12900	12900	12200	12900
3 No load current	mA	226	161	121	73.5	60.4
4 Nominal speed	rpm	9800	10300	10400	9630	10500
5 Nominal torque (max. continuous torque)	mNm	23	21.8	22.7	22.5	23.2
6 Nominal current (max. continuous current)	A	2.71	1.8	1.4	0.872	0.716
7 Stall torque	mNm	114	112	121	111	127
8 Starting current	A	12.6	8.55	6.97	4	3.66
9 Max. efficiency	%	76	75	76	75	77
Characteristics						
10 Terminal resistance phase to phase	Ω	0.955	2.1	3.44	9.01	13.1
11 Terminal inductance phase to phase	mH	0.0498	0.103	0.182	0.462	0.729
12 Torque constant	mNm/A	9.1	13	17.4	27.7	34.8
13 Speed constant	rpm/V	1050	732	549	345	274
14 Speed/torque gradient	rpm/mNm	110	118	109	112	103
15 Mechanical time constant	ms	5.14	5.5	5.06	5.23	4.82
16 Rotor inertia	gcm^2	4.45	4.45	4.45	4.45	4.45

Specifications

Thermal data

17	Thermal resistance housing-ambient	10.2 K/W
18	Thermal resistance winding-housing	1.02 K/W
19	Thermal time constant winding	1.99 s
20	Thermal time constant motor	628 s
21	Ambient temperature	-40…+100°C
22	Max. permissible winding temperature	+155°C

Mechanical data (preloaded ball bearings)

23	Max. permissible speed	18000 rpm
24	Axial play at axial load < 4 N	0 mm
	> 4 N	0.14 mm
25	Radial play	preloaded
26	Max. axial load (dynamic)	3.5 N
27	Max. force for press fits (static)	60 N
	(static, shaft supported)	1000 N
28	Max. radial loading, 5 mm from flange	16 N

Other specifications

29	Number of pole pairs	1
30	Number of phases	3
31	Weight of motor	110 g

Values listed in the table are nominal.

Connection (Cable AWG 24)

brown	Motor winding 1	Pin 1
red	Motor winding 2	Pin 2
orange	Motor winding 3	Pin 3
yellow	V_{Hall} 3…24 VDC	Pin 4
green	GND	Pin 5
blue	Hall sensor 1	Pin 6
violet	Hall sensor 2	Pin 7
grey	Hall sensor 3	Pin 8

Wiring diagram for Hall sensors see p. 33

Operating Range

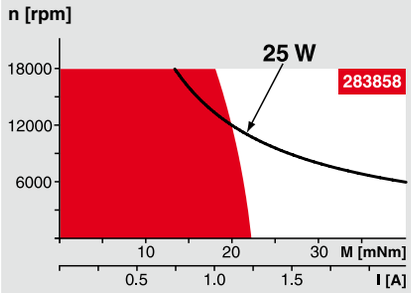

Comments

Continuous operation
In observation of above listed thermal resistance (lines 17 and 18) the maximum permissible winding temperature will be reached during continuous operation at 25°C ambient.
= Thermal limit.

Short term operation
The motor may be briefly overloaded (recurring).

Assigned power rating

maxon Modular System

Overview on page 20 - 25

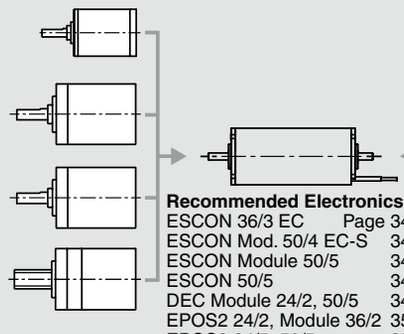

Planetary Gearhead
∅22 mm
0.5 - 3.4 Nm
Seite 263/266

Planetary Gearhead
∅32 mm
1.0 - 6.0 Nm
Page 277

Koaxdrive
∅32 mm
1.0 - 4.5 Nm
Page 281

Spindle Drive
∅32 mm
Page 301–303

Recommended Electronics:

ESCON 36/3 EC	Page 342
ESCON Mod. 50/4 EC-S	343
ESCON Module 50/5	343
ESCON 50/5	344
DEC Module 24/2, 50/5	346
EPOS2 24/2, Module 36/2	350
EPOS2 24/5, 50/5	351
EPOS2 P 24/5	354
EPOS3 70/10 EtherCAT	357
MAXPOS 50/5	360
Notes	**24**

Encoder MR
128/256/512 CPT,
2/3 channels
Page 318

Brake AB 20
24 VDC
0.1 Nm
Page 370

EC-max 30 ∅30 mm, brushless, 40 Watt

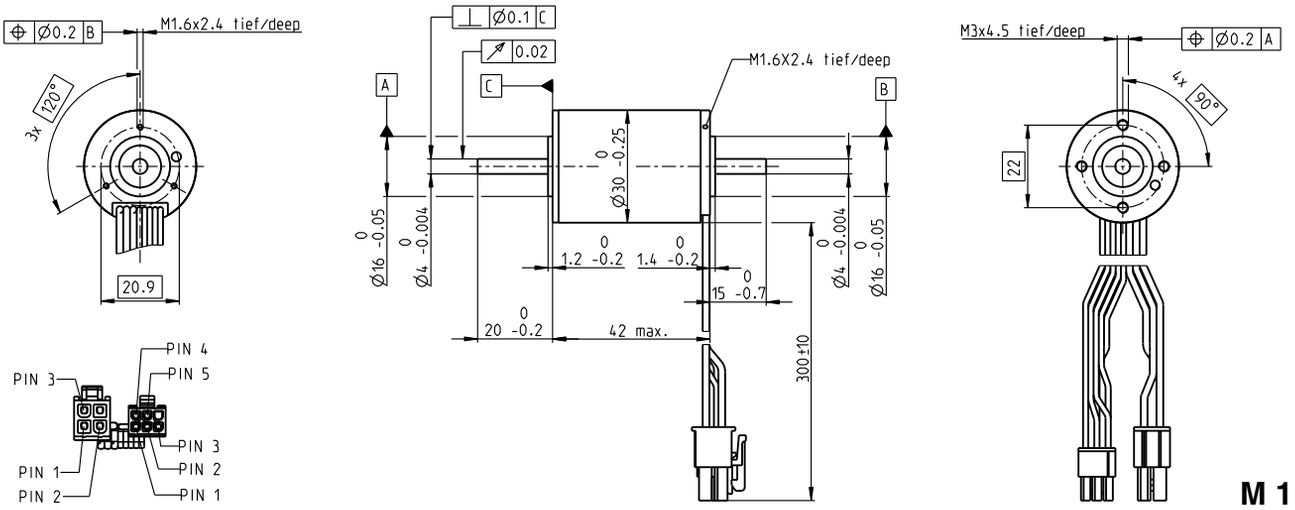

Stock program
Standard program
Special program (on request)

Part Numbers

		272766	272768	272769	272770
Motor Data					
Values at nominal voltage					
1 Nominal voltage	V	12	24	36	48
2 No load speed	rpm	8680	9250	9150	9250
3 No load current	mA	223	123	80.5	61.4
4 Nominal speed	rpm	6630	7220	7090	7210
5 Nominal torque (max. continuous torque)	mNm	34.9	33.8	33.3	33.4
6 Nominal current (max. continuous current)	A	2.88	1.49	0.97	0.738
7 Stall torque	mNm	153	160	154	157
8 Starting current	A	11.8	6.57	4.18	3.24
9 Max. efficiency	%	75	75	75	75
Characteristics					
10 Terminal resistance phase to phase	Ω	1.01	3.65	8.61	14.8
11 Terminal inductance phase to phase	mH	0.088	0.31	0.713	1.24
12 Torque constant	mNm/A	12.9	24.3	36.8	48.6
13 Speed constant	rpm/V	738	393	259	197
14 Speed/torque gradient	rpm/mNm	57.8	59.1	60.6	59.9
15 Mechanical time constant	ms	6.66	6.81	6.98	6.9
16 Rotor inertia	gcm²	11	11	11	11

Specifications

Thermal data

17	Thermal resistance housing-ambient	8.6 K/W
18	Thermal resistance winding-housing	1 K/W
19	Thermal time constant winding	3.25 s
20	Thermal time constant motor	777 s
21	Ambient temperature	-40…+100°C
22	Max. permissible winding temperature	+155°C

Mechanical data (preloaded ball bearings)

23	Max. permissible speed	15000 rpm
24	Axial play at axial load < 6.0 N	0 mm
	> 6.0 N	0.14 mm
25	Radial play	preloaded
26	Max. axial load (dynamic)	5 N
27	Max. force for press fits (static)	98 N
	(static, shaft supported)	2000 N
28	Max. radial loading, 5 mm from flange	25 N

Other specifications

29	Number of pole pairs	1
30	Number of phases	3
31	Weight of motor	195 g

Values listed in the table are nominal.

Connection motor (Cable AWG 20)

red	Motor winding 1	Pin 1
black	Motor winding 2	Pin 2
white	Motor winding 3	Pin 3
	N.C.	Pin 4
Connector	**Part number**	
Molex	39-01-2040	

Connection sensors (Cable AWG 26)

yellow	Hall sensor 1	Pin 1
brown	Hall sensor 2	Pin 2
grey	Hall sensor 3	Pin 3
blue	GND	Pin 4
green	V_{Hall} 3…24 VDC	Pin 5
	N.C.	Pin 6
Connector	**Part number**	
Molex	430-25-0600	

Wiring diagram for Hall sensors see p. 33

Operating Range

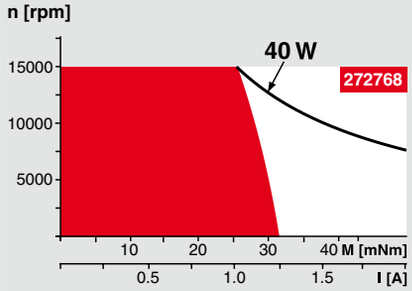

Comments

Continuous operation
In observation of above listed thermal resistance (lines 17 and 18) the maximum permissible winding temperature will be reached during continuous operation at 25°C ambient.
= Thermal limit.

Short term operation
The motor may be briefly overloaded (recurring).

Assigned power rating

maxon Modular System

Overview on page 20 - 25

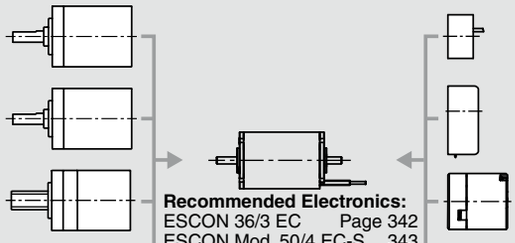

Planetary Gearhead
∅32 mm
1.0 - 8.0 Nm
Page 277/279

Koaxdrive
∅32 mm
1.0 - 4.5 Nm
Page 281

Spindle Drive
∅32 mm
Page 301–303

Recommended Electronics:

ESCON 36/3 EC	Page 342
ESCON Mod. 50/4 EC-S	343
ESCON Module 50/5	343
ESCON 50/5, 70/10	344
DEC Module 24/2	346
DEC Module 50/5	346
EPOS2 24/5, 50/5	351
EPOS2 P 24/5	354
EPOS3 70/10 EtherCAT	357
MAXPOS 50/5	360
Notes	**24**

Encoder MR
500/1000 CPT,
3 channels
Page 319

Encoder HEDL 5540
500 CPT,
3 channels
Page 328

Brake AB 20
24 VDC
0.1 Nm
Page 370

EC-max 30 ∅30 mm, brushless, 60 Watt

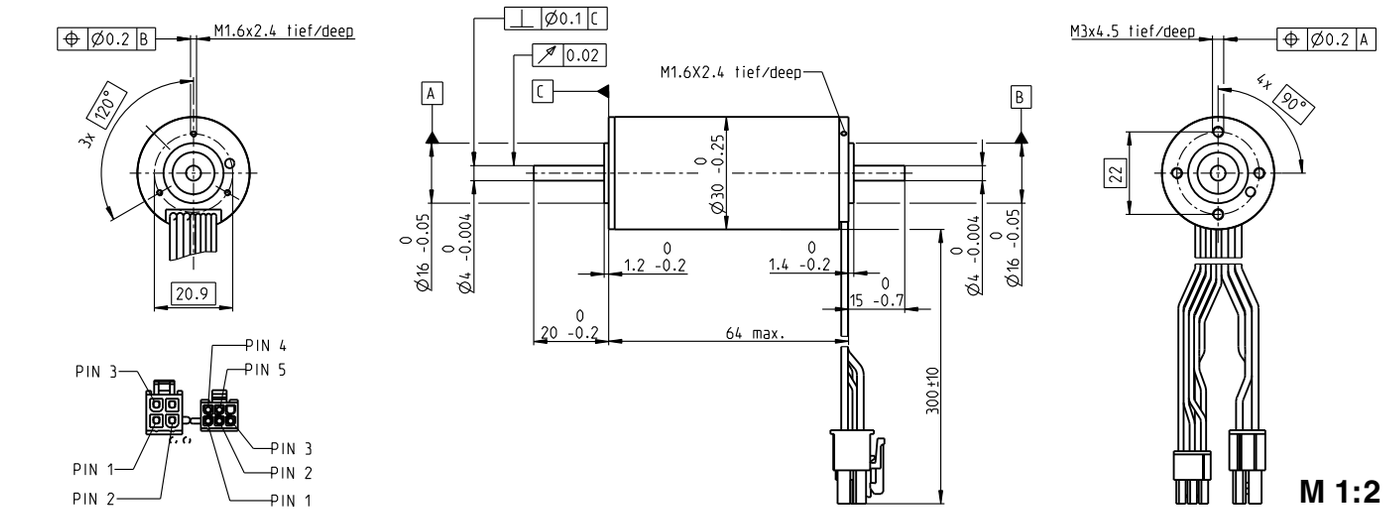

Stock program
Standard program
Special program (on request)

Part Numbers

Motor Data		272762	272763	272764	272765
Values at nominal voltage					
1 Nominal voltage	V	12	24	36	48
2 No load speed	rpm	7980	9340	9490	9350
3 No load current	mA	302	191	130	95.4
4 Nominal speed	rpm	6590	8040	8270	8130
5 Nominal torque (max. continuous torque)	mNm	63.6	60.7	63.7	64.1
6 Nominal current (max. continuous current)	A	4.72	2.66	1.88	1.4
7 Stall torque	mNm	381	458	522	519
8 Starting current	A	26.8	18.8	14.5	10.7
9 Max. efficiency	%	80	81	82	82
Characteristics					
10 Terminal resistance phase to phase	Ω	0.447	1.27	2.48	4.49
11 Terminal inductance phase to phase	mH	0.049	0.143	0.312	0.573
12 Torque constant	mNm/A	14.2	24.3	35.9	48.6
13 Speed constant	rpm/V	672	393	266	197
14 Speed/torque gradient	rpm/mNm	21.2	20.6	18.4	18.2
15 Mechanical time constant	ms	4.86	4.73	4.21	4.17
16 Rotor inertia	gcm^2	21.9	21.9	21.9	21.9

Specifications

Thermal data

17	Thermal resistance housing-ambient	7.4 K/W
18	Thermal resistance winding-housing	0.5 K/W
19	Thermal time constant winding	2.76 s
20	Thermal time constant motor	1000 s
21	Ambient temperature	-40…+100°C
22	Max. permissible winding temperature	+155°C

Mechanical data (preloaded ball bearings)

23	Max. permissible speed	15000 rpm
24	Axial play at axial load < 6.0 N	0 mm
	> 6.0 N	0.14 mm
25	Radial play	preloaded
26	Max. axial load (dynamic)	5 N
27	Max. force for press fits (static)	98 N
	(static, shaft supported)	1300 N
28	Max. radial loading, 5 mm from flange	25 N

Other specifications

29	Number of pole pairs	1
30	Number of phases	3
31	Weight of motor	305 g

Values listed in the table are nominal.

Connection motor (Cable AWG 20)

red	Motor winding 1	Pin 1
black	Motor winding 2	Pin 2
white	Motor winding 3	Pin 3
	N.C.	Pin 4
Connector	**Part number**	
Molex	39-01-2040	

Connection sensors (Cable AWG 26)

yellow	Hall sensor 1	Pin 1
brown	Hall sensor 2	Pin 2
grey	Hall sensor 3	Pin 3
blue	GND	Pin 4
green	V_{Hall} 3…24 VDC	Pin 5
	N.C.	Pin 6
Connector	**Part number**	
Molex	430-25-0600	

Wiring diagram for Hall sensors see p. 33

Operating Range

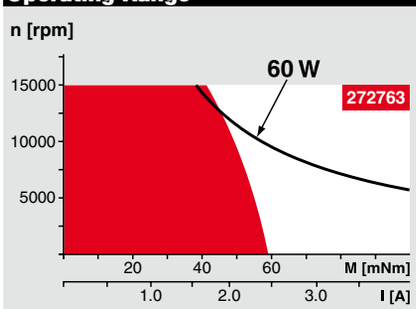

Comments

Continuous operation
In observation of above listed thermal resistance (lines 17 and 18) the maximum permissible winding temperature will be reached during continuous operation at 25°C ambient.
= Thermal limit.

Short term operation
The motor may be briefly overloaded (recurring).

Assigned power rating

maxon Modular System

Overview on page 20 - 25

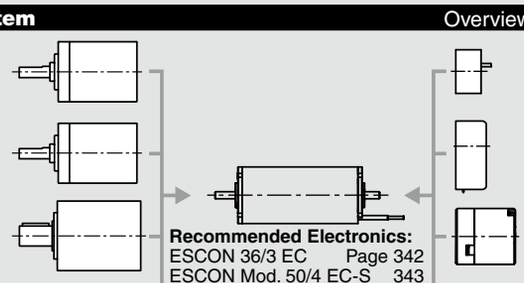

Planetary Gearhead
∅32 mm
1.0 - 8.0 Nm
Page 264/266

Koaxdrive
∅32 mm
1.0 - 4.5 Nm
Page 281

Planetary Gearhead
∅42 mm
3 - 15 Nm
Page 284

Recommended Electronics:

ESCON 36/3 EC	Page 342
ESCON Mod. 50/4 EC-S	343
ESCON Module 50/5	343
ESCON 50/5, 70/10	344
DEC Module 24/2	346
DEC Module 50/5	346
EPOS2 24/5, 50/5	351
EPOS2 P 24/5	354
EPOS3 70/10 EtherCAT	357
MAXPOS 50/5	360
Notes	**24**

Encoder MR
500/1000 CPT,
3 channels
Page 319

Encoder HEDL 5540
500 CPT,
3 channels
Page 328

Brake AB 20
24 VDC
0.1 Nm
Page 370

EC-max 40 ∅40 mm, brushless, 70 Watt

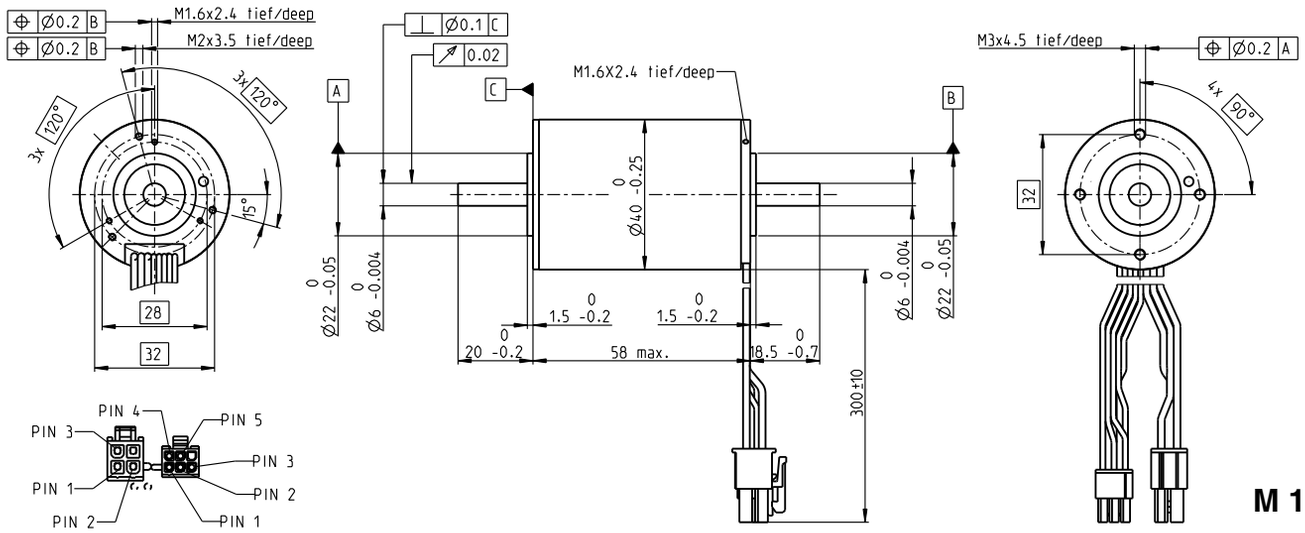

Stock program
Standard program
Special program (on request)

Part Numbers

		283866	283867	283868	283869
Motor Data					
Values at nominal voltage					
1 Nominal voltage	V	12	24	36	48
2 No load speed	rpm	8030	8040	8470	9030
3 No load current	mA	584	292	209	173
4 Nominal speed	rpm	6410	6520	7030	7610
5 Nominal torque (max. continuous torque)	mNm	89.7	89.6	95	94.2
6 Nominal current (max. continuous current)	A	6.88	3.44	2.55	2.02
7 Stall torque	mNm	466	497	595	636
8 Starting current	A	33.3	17.8	14.9	12.7
9 Max. efficiency	%	76	77	78	79
Characteristics					
10 Terminal resistance phase to phase	Ω	0.36	1.35	2.42	3.78
11 Terminal inductance phase to phase	mH	0.0464	0.186	0.379	0.592
12 Torque constant	mNm/A	14	28	40	50
13 Speed constant	rpm/V	682	341	239	191
14 Speed/torque gradient	rpm/mNm	17.6	16.5	14.4	14.4
15 Mechanical time constant	ms	9.41	8.82	7.74	7.73
16 Rotor inertia	gcm²	51.2	51.2	51.2	51.2

Specifications

Thermal data		
17 Thermal resistance housing-ambient		4.63 K/W
18 Thermal resistance winding-housing		0.542 K/W
19 Thermal time constant winding		3.78 s
20 Thermal time constant motor		1060 s
21 Ambient temperature		-40…+100°C
22 Max. permissible winding temperature		+155°C
Mechanical data (preloaded ball bearings)		
23 Max. permissible speed		12000 rpm
24 Axial play at axial load	< 10 N	0 mm
	> 10 N	0.14 mm
25 Radial play		preloaded
26 Max. axial load (dynamic)		8 N
27 Max. force for press fits (static)		211 N
(static, shaft supported)		5000 N
28 Max. radial loading, 5 mm from flange		80 N
Other specifications		
29 Number of pole pairs		1
30 Number of phases		3
31 Weight of motor		460 g

Values listed in the table are nominal.

Connection motor (Cable AWG 20)

red	Motor winding 1	Pin 1
black	Motor winding 2	Pin 2
white	Motor winding 3	Pin 3
	N.C.	Pin 4

Connector	**Part number**
Molex	39-01-2040

Connection (Cable AWG 26)

yellow	Hall sensor 1	Pin 1
brown	Hall sensor 2	Pin 2
grey	Hall sensor 3	Pin 3
blue	GND	Pin 4
green	V_{Hall} 3…24 VDC	Pin 5
	N.C.	Pin 6

Connector	**Part number**
Molex	430-25-0600

Wiring diagram for Hall sensors see p. 33

Operating Range

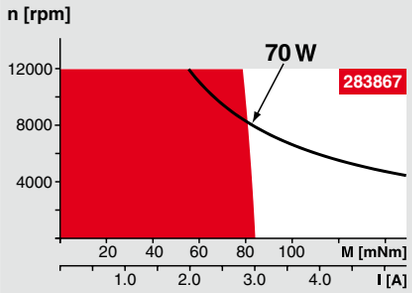

Comments

Continuous operation
In observation of above listed thermal resistance (lines 17 and 18) the maximum permissible winding temperature will be reached during continuous operation at 25°C ambient.
= Thermal limit.

Short term operation
The motor may be briefly overloaded (recurring).

Assigned power rating

maxon Modular System

Overview on page 20 - 25

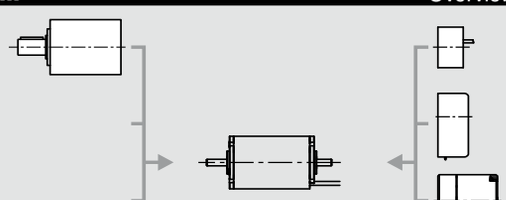

Planetary Gearhead
∅42 mm
3 - 15 Nm
Page 284

Encoder MR
256 - 1024 CPT,
3 channels
Page 320

Encoder HEDL 5540
500 CPT,
3 channels
Page 328

Brake AB 28
24 VDC
0.4 Nm
Page 371

Recommended Electronics:

ESCON Mod. 50/5	Page 343
ESCON Mod. 50/4 EC-S	343
ESCON 50/5	344
ESCON 70/10	344
DEC Module 50/5	346
EPOS2 24/5	351
EPOS2 50/5	351
EPOS2 P 24/5	354
EPOS3 70/10 EtherCAT	357
MAXPOS 50/5	360
Notes	**24**

EC-max 40 ∅40 mm, brushless, 120 Watt

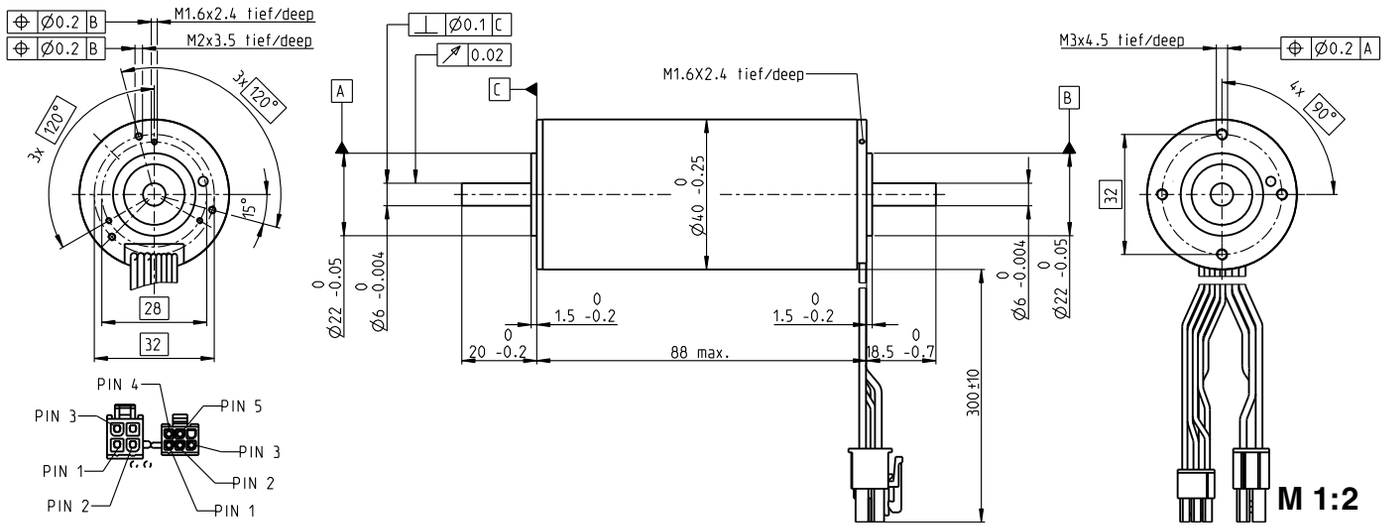

Stock program
Standard program
Special program (on request)

Part Numbers

		283870	283871	283872	283873
Motor Data					
Values at nominal voltage					
1 Nominal voltage	V	48	48	48	48
2 No load speed	rpm	10100	7240	4720	3610
3 No load current	mA	310	188	104	72.8
4 Nominal speed	rpm	9250	6280	3770	2670
5 Nominal torque (max. continuous torque)	mNm	170	185	203	211
6 Nominal current (max. continuous current)	A	4.06	3.1	2.19	1.74
7 Stall torque	mNm	2090	1490	1050	838
8 Starting current	A	46.7	23.7	10.9	6.68
9 Max. efficiency	%	85	83	82	80
Characteristics					
10 Terminal resistance phase to phase	Ω	1.03	2.02	4.4	7.19
11 Terminal inductance phase to phase	mH	0.204	0.4	0.937	1.6
12 Torque constant	mNm/A	44.8	62.8	96.1	126
13 Speed constant	rpm/V	213	152	99.4	76.1
14 Speed/torque gradient	rpm/mNm	4.89	4.9	4.55	4.35
15 Mechanical time constant	ms	5.17	5.19	4.81	4.61
16 Rotor inertia	gcm^2	101	101	101	101

Specifications

Thermal data		
17 Thermal resistance housing-ambient		3.45 K/W
18 Thermal resistance winding-housing		0.29 K/W
19 Thermal time constant winding		3.96 s
20 Thermal time constant motor		1240 s
21 Ambient temperature		-40…+100°C
22 Max. permissible winding temperature		+155°C
Mechanical data (preloaded ball bearings)		
23 Max. permissible speed		12000 rpm
24 Axial play at axial load	< 10 N	0 mm
	> 10 N	0.14 mm
25 Radial play		preloaded
26 Max. axial load (dynamic)		8 N
27 Max. force for press fits (static)		211 N
(static, shaft supported)		4000 N
28 Max. radial loading, 5 mm from flange		80 N
Other specifications		
29 Number of pole pairs		1
30 Number of phases		3
31 Weight of motor		720 g

Values listed in the table are nominal.

Connection motor (Cable AWG 20)

red	Motor winding 1	Pin 1
black	Motor winding 2	Pin 2
white	Motor winding 3	Pin 3
	N.C.	Pin 4

Connector	**Part number**
Molex	39-01-2040

Connection sensors (Cable AWG 26)

yellow	Hall sensor 1	Pin 1
brown	Hall sensor 2	Pin 2
grey	Hall sensor 3	Pin 3
blue	GND	Pin 4
green	V_{Hall} 3…24 VDC	Pin 5
	N.C.	Pin 6

Connector	**Part number**
Molex	430-25-0600

Wiring diagram for Hall sensors see p. 33

Operating Range

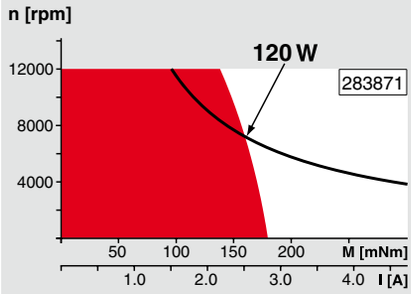

Comments

Continuous operation
In observation of above listed thermal resistance (lines 17 and 18) the maximum permissible winding temperature will be reached during continuous operation at 25°C ambient.
= Thermal limit.

Short term operation
The motor may be briefly overloaded (recurring).

Assigned power rating

maxon Modular System

Overview on page 20 - 25

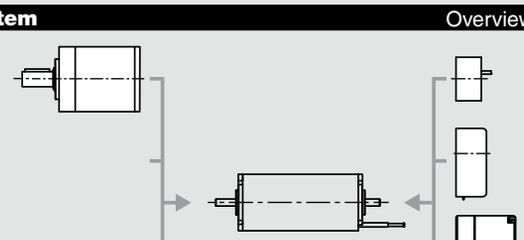

Planetary Gearhead
∅52 mm
4 - 30 Nm
Page 288

Encoder MR
256 - 1024 CPT,
3 channels
Page 320

Encoder HEDL 5540
500 CPT,
3 channels
Page 328

Brake AB 28
24 VDC
0.4 Nm
Page 371

Recommended Electronics:

ESCON Mod. 50/5	Page 343
ESCON Mod. 50/4 EC-S	343
ESCON 50/5	344
ESCON 70/10	344
DEC Module 50/5	346
EPOS2 24/5, 50/5, 70/10	351
EPOS2 P 24/5	354
EPOS3 70/10 EtherCAT	357
MAXPOS 50/5	360
Notes	**24**

For your personal notes

P [mW]	I [mA]	η [%]	n [rpm, min⁻¹]

maxon EC-4pole

maxon EC-4pole

This 4-pole power motor is one of the best in its class and demonstrates excellent performance thanks to maxon's winding technology: top performance per volume and weight unit, quality and security thanks to largely automated production, cogging-free motion and of course an unprecedented service life.

Summary	210
EC-4pole motors 22–32 mm in diameter	211–216

maxon EC-4pole program

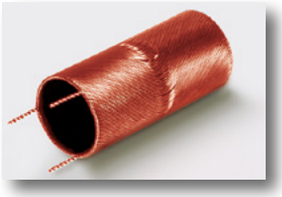

The “heart” is the ironless winding, System maxon®. This means physically dependent – advantages like no detent, high efficiency and excellent regulating dynamics.

The motor housing, a simple tube made of stainless steel – non magnetic, rigid, rustproof.

High performance capability thanks to the 4-pole magnet.

Metallic housing and flange allow good heat dissipation and mechanical stability.

Shaft with no groove guarantees torsional stability and smooth running.

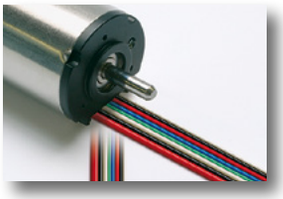

Non-tension cables can be directed both radially and axially from the motor. Wide range of plug options.

High quality, thanks to a process monitored production on the most modern assembly lines which are, in part, developed by maxon.

The EC-motor program delivers top performance per volume and weight unit.

EC-4pole 22 ∅22 mm, brushless, 90 Watt

High Power

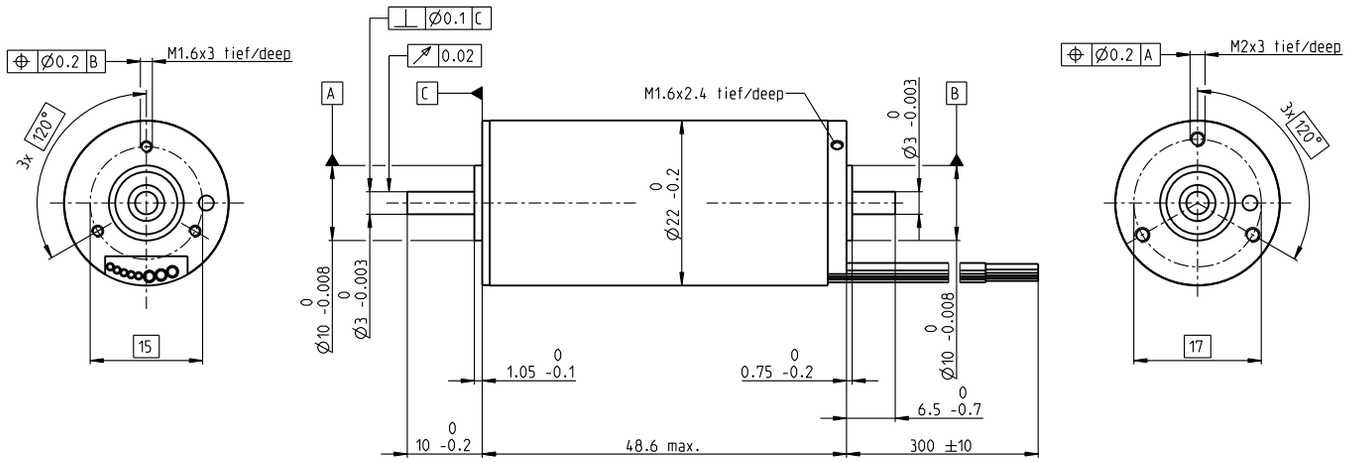

M 1:1

Stock program
Standard program
Special program (on request)

Part Numbers

			323217	323218	323219	323220	327739
Motor Data							
	Values at nominal voltage						
1	Nominal voltage	V	18	24	36	48	48
2	No load speed	rpm	16300	16300	16300	16300	6900
3	No load current	mA	221	166	110	82.8	21.1
4	Nominal speed	rpm	14600	14700	14700	14700	5320
5	Nominal torque (max. continuous torque)	mNm	51.8	53.5	51.8	50.5	51.3
6	Nominal current (max. continuous current)	A	5.07	3.92	2.54	1.86	0.788
7	Stall torque	mNm	588	639	612	586	234
8	Starting current	A	55.8	45.5	29.1	20.9	3.55
9	Max. efficiency	%	88	89	88	88	85
	Characteristics						
10	Terminal resistance phase to phase	Ω	0.323	0.527	1.24	2.3	13.5
11	Terminal inductance phase to phase	mH	0.0283	0.0503	0.113	0.201	1.11
12	Torque constant	mNm/A	10.5	14	21.1	28.1	66
13	Speed constant	rpm/V	907	680	453	340	145
14	Speed/torque gradient	rpm/mNm	27.8	25.5	26.7	27.9	29.7
15	Mechanical time constant	ms	1.61	1.48	1.55	1.62	1.72
16	Rotor inertia	gcm²	5.54	5.54	5.54	5.54	5.54

Specifications

	Thermal data	
17	Thermal resistance housing-ambient	9.08 K/W
18	Thermal resistance winding-housing	0.904 K/W
19	Thermal time constant winding	3.89 s
20	Thermal time constant motor	358 s
21	Ambient temperature	-20…+100°C
22	Max. permissible winding temperature	+155°C
	Mechanical data (preloaded ball bearings)	
23	Max. permissible speed	25000 rpm
24	Axial play at axial load < 5.0 N	0 mm
	> 5.0 N	0.14 mm
25	Radial play	preloaded
26	Max. axial load (dynamic)	4 N
27	Max. force for press fits (static)	53 N
	(static, shaft supported)	1000 N
28	Max. radial loading, 5 mm from flange	16 N
	Other specifications	
29	Number of pole pairs	2
30	Number of phases	3
31	Weight of motor	125 g

Values listed in the table are nominal.

Connection motor (Cable AWG 20)

red	Motor winding 1
white	Motor winding 3
black	Motor winding 2

Connection sensors (Cable AWG 26)

red/grey	Hall sensor 1
black/grey	Hall sensor 2
white/grey	Hall sensor 3
green	V_{Hall} 3…24 VDC
blue	GND

Operating Range

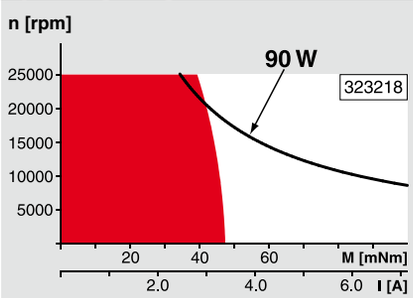

Comments

Continuous operation
In observation of above listed thermal resistance (lines 17 and 18) the maximum permissible winding temperature will be reached during continuous operation at 25°C ambient.
= Thermal limit.

Short term operation
The motor may be briefly overloaded (recurring).

Assigned power rating

maxon Modular System

Overview on page 20–25

Planetary Gearhead
∅22 mm
2.0 - 3.4 Nm
Page 266

Planetary Gearhead
∅32 mm
1.0 - 6.0 Nm
Page 277

Spindle Drive
∅32 mm
Page 301–303

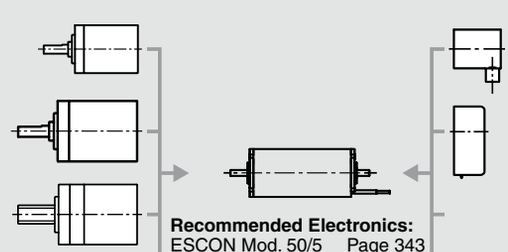

Encoder SCH16F
2000 - 3600 CPT,
3 channels
Page 322

Encoder HEDL 5540
500 CPT,
3 channels
Page 330

Recommended Electronics:

ESCON Mod. 50/5	Page 343
ESCON Mod. 50/4 EC-S	343
ESCON 50/5	344
ESCON 70/10	344
DEC Module 50/5	346
EPOS2 24/5	351
EPOS2 50/5, 70/10	351
EPOS2 P 24/5	354
EPOS3 70/10 EtherCAT	357
MAXPOS 50/5	360
Notes	**24**

EC-4pole 22 ∅22 mm, brushless, 120 Watt

High Power

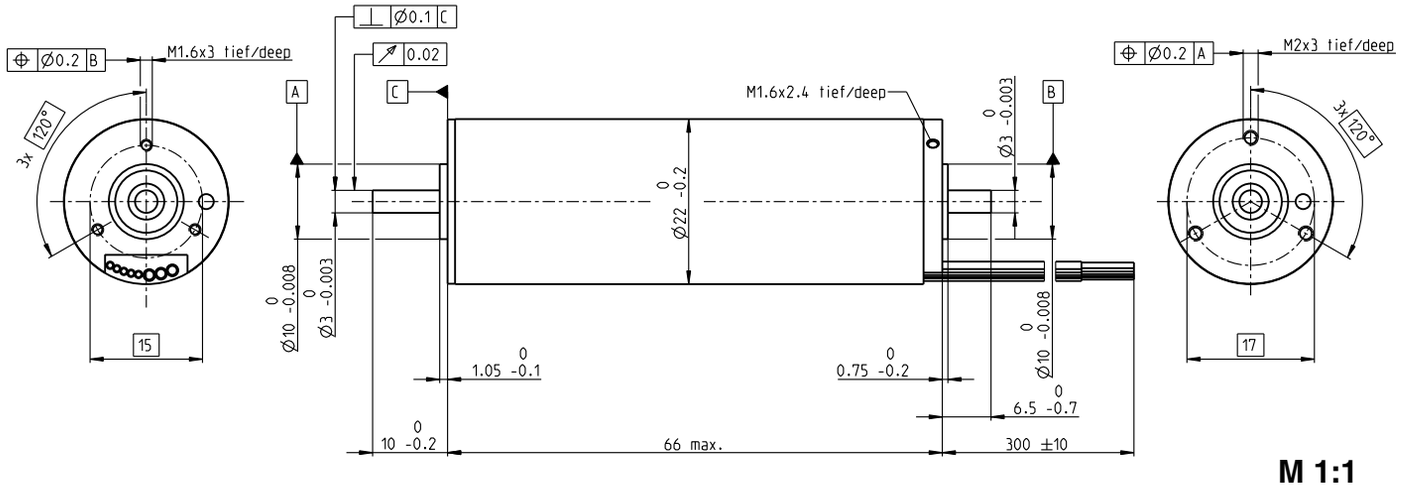

M 1:1

Stock program
Standard program
Special program (on request)

Part Numbers

		311535	311536	311537	311538
Motor Data					
Values at nominal voltage					
1 Nominal voltage	V	18	24	36	48
2 No load speed	rpm	16800	16900	17800	16900
3 No load current	mA	298	223	166	112
4 Nominal speed	rpm	15500	15600	16600	15600
5 Nominal torque (max. continuous torque)	mNm	64.1	64.9	64.8	64.8
6 Nominal current (max. continuous current)	A	6.53	4.95	3.5	2.47
7 Stall torque	mNm	874	954	1090	1020
8 Starting current	A	86	70.4	56.8	37.7
9 Max. efficiency	%	89	89	90	90
Characteristics					
10 Terminal resistance phase to phase	Ω	0.209	0.341	0.634	1.27
11 Terminal inductance phase to phase	mH	0.0173	0.0308	0.0618	0.123
12 Torque constant	mNm/A	10.2	13.5	19.2	27.1
13 Speed constant	rpm/V	940	705	497	352
14 Speed/torque gradient	rpm/mNm	19.4	17.7	16.4	16.6
15 Mechanical time constant	ms	1.81	1.65	1.53	1.54
16 Rotor inertia	gcm^2	8.91	8.91	8.91	8.91

Specifications

Thermal data

17	Thermal resistance housing-ambient	8.01 K/W
18	Thermal resistance winding-housing	1 K/W
19	Thermal time constant winding	6.45 s
20	Thermal time constant motor	701 s
21	Ambient temperature	-20…+100°C
22	Max. permissible winding temperature	+155°C

Mechanical data (preloaded ball bearings)

23	Max. permissible speed	25000 rpm
24	Axial play at axial load < 5.0 N	0 mm
	> 5.0 N	0.14 mm
25	Radial play	preloaded
26	Max. axial load (dynamic)	4 N
27	Max. force for press fits (static)	53 N
	(static, shaft supported)	600 N
28	Max. radial loading, 5 mm from flange	16 N

Other specifications

29	Number of pole pairs	2
30	Number of phases	3
31	Weight of motor	175 g

Values listed in the table are nominal.

Connection motor (Cable AWG 20)

red	Motor winding 1
white	Motor winding 3
black	Motor winding 2

Connection sensors (Cable AWG 26)

red/grey	Hall sensor 1
black/grey	Hall sensor 2
white/grey	Hall sensor 3
green	V_{Hall} 3…24 VDC
blue	GND

Operating Range

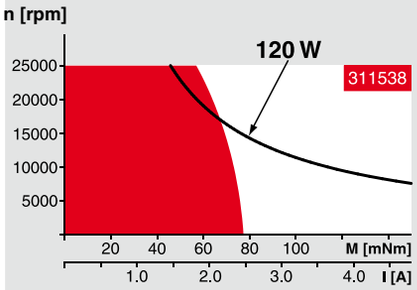

Comments

Continuous operation
In observation of above listed thermal resistance (lines 17 and 18) the maximum permissible winding temperature will be reached during continuous operation at 25°C ambient.
= Thermal limit.

Short term operation
The motor may be briefly overloaded (recurring).

Assigned power rating

maxon Modular System

Overview on page 20–25

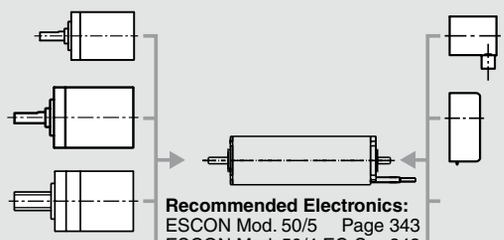

Planetary Gearhead
∅22 mm
2.0 - 3.4 Nm
Page 266

Planetary Gearhead
∅32 mm
1.0 - 6.0 Nm
Page 277

Spindle Drive
∅32 mm
Page 301–303

Recommended Electronics:

ESCON Mod. 50/5	Page 343
ESCON Mod. 50/4 EC-S	343
ESCON 50/5	344
ESCON 70/10	344
DEC Module 50/5	346
EPOS2 24/5	351
EPOS2 50/5	351
EPOS2 70/10	351
EPOS2 P 24/5	354
EPOS3 70/10 EtherCAT	357
MAXPOS 50/5	360
Notes	**24**

Encoder SCH16F
2000 - 3600 CPT,
3 channels
Page 322

Encoder HEDL 5540
500 CPT,
3 channels
Page 330

EC-4pole 30 ∅30 mm, brushless, 100 Watt

High Power

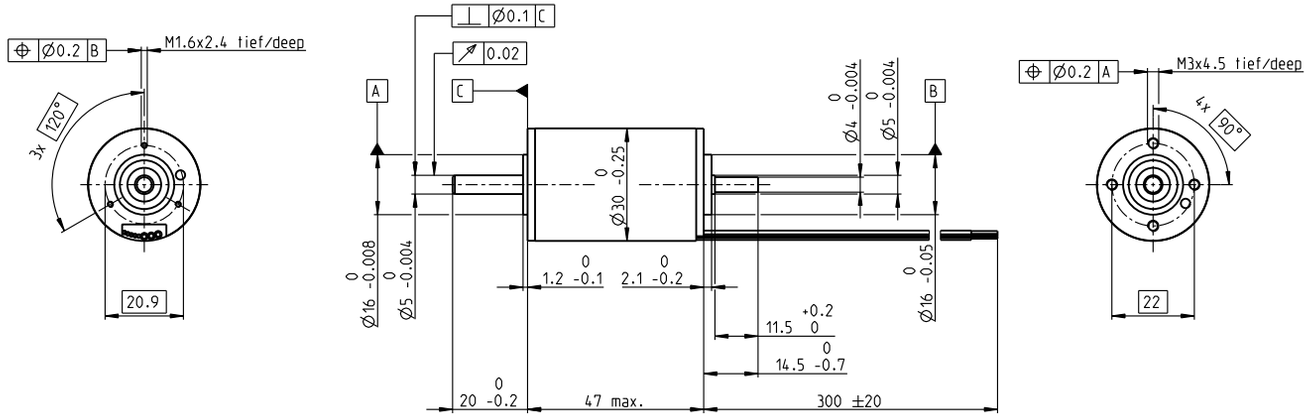

M 1:2

Stock program
Standard program
Special program (on request)

Part Numbers

Motor Data		309755	309756	309757	309758
Values at nominal voltage					
1 Nominal voltage	V	18	24	36	48
2 No load speed	rpm	17800	17800	17800	17800
3 No load current	mA	719	539	360	270
4 Nominal speed	rpm	16700	16700	16800	16800
5 Nominal torque (max. continuous torque)	mNm	70.1	66.9	72.4	71.5
6 Nominal current (max. continuous current)	A	7.91	5.69	4.07	3.02
7 Stall torque	mNm	1280	1240	1480	1470
8 Starting current	A	133	96.9	77.2	57.4
9 Max. efficiency	%	86	86	87	87
Characteristics					
10 Terminal resistance phase to phase	Ω	0.135	0.248	0.466	0.836
11 Terminal inductance phase to phase	mH	0.0166	0.0295	0.0664	0.118
12 Torque constant	mNm/A	9.58	12.8	19.2	25.5
13 Speed constant	rpm/V	997	748	499	374
14 Speed/torque gradient	rpm/mNm	14.1	14.5	12.1	12.2
15 Mechanical time constant	ms	2.7	2.78	2.33	2.35
16 Rotor inertia	gcm^2	18.3	18.3	18.3	18.3

Specifications

Thermal data

17	Thermal resistance housing-ambient	7.95 K/W
18	Thermal resistance winding-housing	0.831 K/W
19	Thermal time constant winding	4.63 s
20	Thermal time constant motor	859 s
21	Ambient temperature	-20…+100°C
22	Max. permissible winding temperature	+155°C

Mechanical data (preloaded ball bearings)

23	Max. permissible speed	25000 rpm
24	Axial play at axial load < 8.0 N	0 mm
	> 8.0 N	0.14 mm
25	Radial play	preloaded
26	Max. axial load (dynamic)	5.5 N
27	Max. force for press fits (static)	73 N
	(static, shaft supported)	2000 N
28	Max. radial loading, 5 mm from flange	25 N

Other specifications

29	Number of pole pairs	2
30	Number of phases	3
31	Weight of motor	210 g

Values listed in the table are nominal.

Connection motor (Cable AWG 18)

black	Motor winding 2
white	Motor winding 3
red	Motor winding 1

Connection sensors (Cable AWG 26)

black/grey	Hall sensor 2
blue	GND
green	V_{Hall} 3…24 VDC
red/grey	Hall sensor 1
white/grey	Hall sensor 3

Operating Range

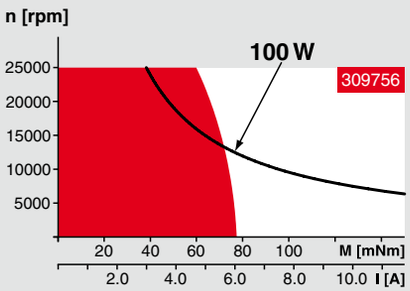

Comments

Continuous operation
In observation of above listed thermal resistance (lines 17 and 18) the maximum permissible winding temperature will be reached during continuous operation at 25°C ambient.
= Thermal limit.

Short term operation
The motor may be briefly overloaded (recurring).

Assigned power rating

maxon Modular System

Overview on page 20–25

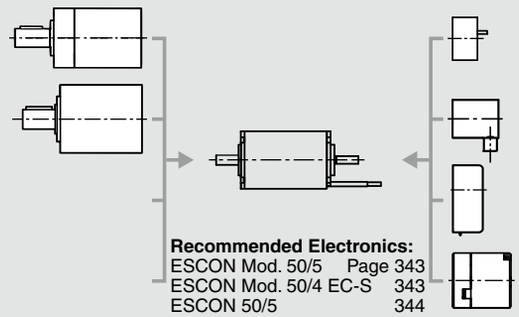

Planetary Gearhead
∅32 mm
8 Nm
Page 279

Planetary Gearhead
∅42 mm
3 - 15 Nm
Page 284

Encoder MR
128 - 1000 CPT,
3 channels
Page 319

Encoder 2RMHF
3000 - 5000 CPT,
3 channels
Page 323

Encoder HEDL 5540
500 CPT,
3 channels
Page 330

Brake AB 20
24 VDC
0.1 Nm
Page 370

Recommended Electronics:

ESCON Mod. 50/5	Page 343
ESCON Mod. 50/4 EC-S	343
ESCON 50/5	344
ESCON 70/10	344
EPOS2 50/5	351
EPOS2 70/10	351
EPOS3 70/10 EtherCAT	357
MAXPOS 50/5	360
Notes	**24**

EC-4pole 30 ∅30 mm, brushless, 200 Watt

High Power

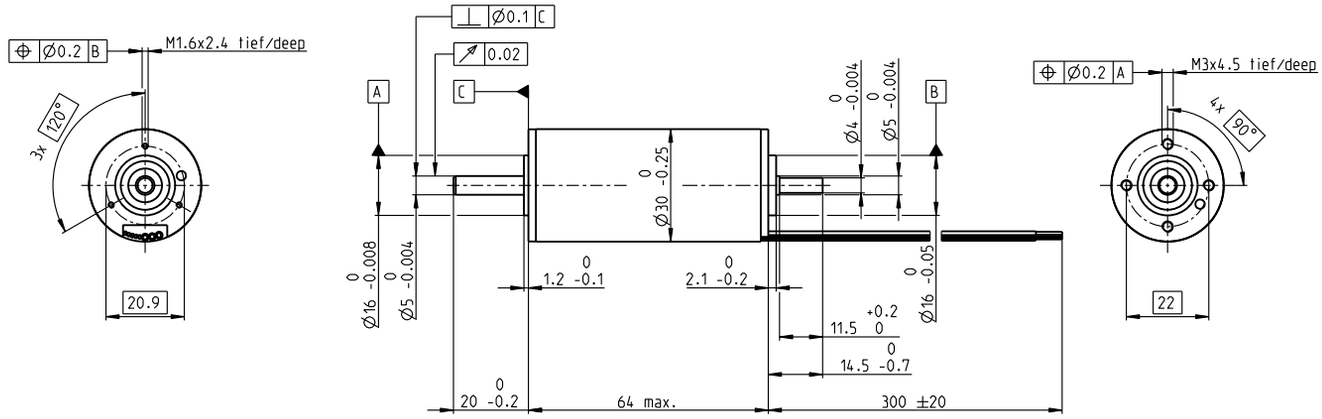

M 1:2

Stock program
Standard program
Special program (on request)

Part Numbers

		305013	305014	305015
Motor Data				
Values at nominal voltage				
1 Nominal voltage	V	24	36	48
2 No load speed	rpm	16700	16700	16500
3 No load current	mA	728	485	356
4 Nominal speed	rpm	15900	15900	15700
5 Nominal torque (max. continuous torque)	mNm	135	134	132
6 Nominal current (max. continuous current)	A	10.5	6.96	5.06
7 Stall torque	mNm	3220	3510	3430
8 Starting current	A	236	171	124
9 Max. efficiency	%	89	90	90
Characteristics				
10 Terminal resistance phase to phase	Ω	0.102	0.21	0.386
11 Terminal inductance phase to phase	mH	0.0163	0.0368	0.0653
12 Torque constant	mNm/A	13.6	20.5	27.6
13 Speed constant	rpm/V	700	466	346
14 Speed/torque gradient	rpm/mNm	5.21	4.78	4.83
15 Mechanical time constant	ms	1.82	1.67	1.69
16 Rotor inertia	gcm^2	33.3	33.3	33.3

Specifications

Thermal data

17	Thermal resistance housing-ambient	5.3 K/W
18	Thermal resistance winding-housing	0.209 K/W
19	Thermal time constant winding	2.11 s
20	Thermal time constant motor	848 s
21	Ambient temperature	-20…+100°C
22	Max. permissible winding temperature	+155°C

Mechanical data (preloaded ball bearings)

23	Max. permissible speed	25000 rpm
24	Axial play at axial load < 8.0 N	0 mm
	> 8.0 N	0.14 mm
25	Radial play	preloaded
26	Max. axial load (dynamic)	5.5 N
27	Max. force for press fits (static)	73 N
	(static, shaft supported)	1300 N
28	Max. radial loading, 5 mm from flange	25 N

Other specifications

29	Number of pole pairs	2
30	Number of phases	3
31	Weight of motor	300 g

Values listed in the table are nominal.

Connection motor (Cable AWG 18)

black	Motor winding 2
white	Motor winding 3
red	Motor winding 1

Connection sensors (Cable AWG 26)

black/grey	Hall sensor 2
blue	GND
green	V_{Hall} 3…24 VDC
red/grey	Hall sensor 1
white/grey	Hall sensor 3

Operating Range

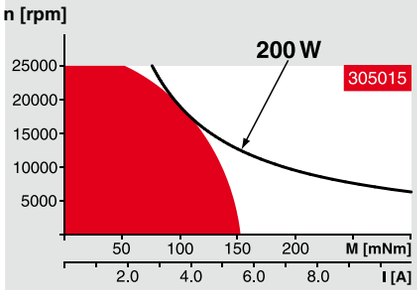

Comments

Continuous operation
In observation of above listed thermal resistance (lines 17 and 18) the maximum permissible winding temperature will be reached during continuous operation at 25°C ambient.
= Thermal limit.

Short term operation
The motor may be briefly overloaded (recurring).

Assigned power rating

maxon Modular System

Overview on page 20–25

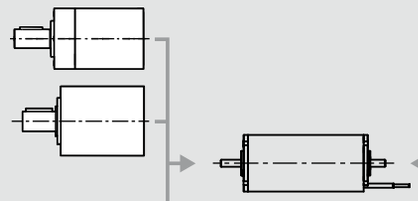

Planetary Gearhead
∅32 mm
8 Nm
Page 279

Planetary Gearhead
∅42 mm
3 - 15 Nm
Page 284

Encoder MR
128 - 1000 CPT,
3 channels
Page 319

Encoder 2RMHF
3000 - 5000 CPT,
3 channels
Page 323

Encoder HEDL 5540
500 CPT,
3 channels
Page 330

Brake AB 20
24 VDC
0.1 Nm
Page 370

Recommended Electronics:

ESCON Mod. 50/5	Page 343
ESCON Mod. 50/4 EC-S	343
ESCON 50/5	344
ESCON 70/10	344
EPOS2 50/5	351
EPOS2 70/10	351
EPOS3 70/10 EtherCAT	357
MAXPOS 50/5	360
Notes	**24**

EC-4pole 32 ∅32 mm, brushless, 220 Watt

Heavy Duty – for applications in air

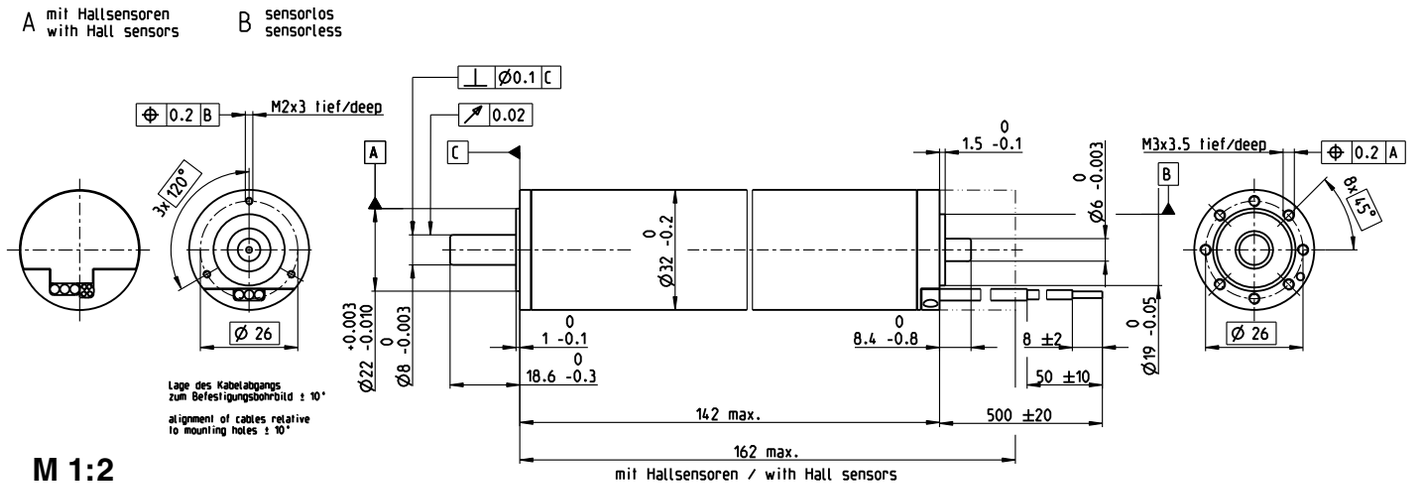

M 1:2

Stock program
Standard program
Special program (on request)

Part Numbers

A with Hall sensors	397798
B sensorless	393879

Motor Data (provisional)

Values at nominal voltage and ambient temperature °C		25	100	150	200
1 Nominal voltage	V	48	48	48	48
2 No load speed	rpm	6470	6650	6770	6890
3 No load current	mA	149	113	109	107
4 Nominal speed[1]	rpm	5710	5870	6080	6470
5 Nominal torque (max. continuous torque)[1]	mNm	339	261	196	104
6 Nominal current (max. continuous current)	A	4.87	3.85	2.98	1.67
7 Stall torque	mNm	3350	2520	2150	1860
8 Starting current	A	47.5	36.7	31.9	28.1
9 Max. efficiency	%	89	89	89	88
Characteristics					
10 Terminal resistance phase to phase	Ω	1.01	1.31	1.51	1.71
11 Terminal inductance phase to phase	mH	0.298	0.298	0.298	0.298
12 Torque constant	mNm/A	70.5	68.7	67.4	66.2
13 Speed constant	rpm/V	135	139	142	144
14 Speed / torque gradient	rpm/mNm	1.94	2.65	3.16	3.71
15 Mechanical time constant	ms	2.6	3.55	4.24	4.98
16 Rotor inertia	gcm^2	128	128	128	128

[1] Values for operation in thermal equilibrium.

Specifications

Thermal data

17	Thermal resistance housing-ambient	3.69 K/W
18	Thermal resistance winding-housing	0.734 K/W
19	Thermal time constant winding	23.5 s
20	Thermal time constant motor	1350 s
21	Ambient temperature	-55 … +200°C
22	Max. permissible winding temperature	+240°C

Mechanical data (preloaded ball bearings)

23	Max. permissible speed	12000 rpm
24	Axial play at axial load < 20 N	0 mm
	> 20 N	max. 0.14 mm
25	Radial play	preloaded
26	Max. axial load (dynamic)	16 N
27	Max. force for press fits (static)	80 N
	(static, shaft supported)	3000 N
28	Max. radial loading, 5 mm from flange	75 N

Other specifications

29	Number of pole pairs	2
30	Number of phases	3
31	Weight of motor (sensorless)	860 g

Connection A, motor cable PTFE (AWG 14)

red	Motor winding 1
black	Motor winding 2
white	Motor winding 3

Connection A, sensors cable PTFE (AWG 24)

green	V_{Hall} 4.5…24 V
blue	GND
red	Hall sensor 1
black	Hall sensor 2
white	Hall sensor 3

Connection B, motor cable PTFE (AWG 14)

red	Motor winding 1
black	Motor winding 2
white	Motor winding 3

Operating Range

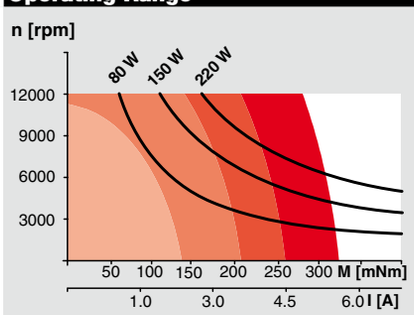

Comments

TA = 25°C
TA = 100°C
TA = 150°C
TA = 200°C

Continuous operation
In observation of above listed thermal resistance (lines 17 and 18) the maximum permissible winding temperature will be reached during continuous operation at 25°C ambient.
= Thermal limit.

Short term operation
The motor may be briefly overloaded (recurring).

Assigned power rating

Application

General
– extreme temperature applications
– vibration tested (according to MIL-STD810F/Jan2000 Fig. 514.5C-10)
– ultra-high vacuum applications (low outgassing, can be baked out at 240°C)

Aerospace
– gas turbine starter/generators for aircraft engines
– regulation of combustion engines

Oil & Gas Industry
– oil, gas and geothermal wells

Robotics
– robotic exploration vehicles

Industry
– pumps and valves for liquid metal cooling systems/turbine fuel and steam control
– valve adjustment for gas and steam power plants

Notice

This motor contains leaded solder. It therefore does not fulfill the requirements for the permitted maximum concentration of hazardous substances in accordance with the EC directive 2011/65/EC (RoHS) for all applications. The motor may therefore only be used for devices that are not subject to this directive.

EC-4pole 32 ∅32 mm, brushless, 480 Watt

Heavy Duty – for applications in oil

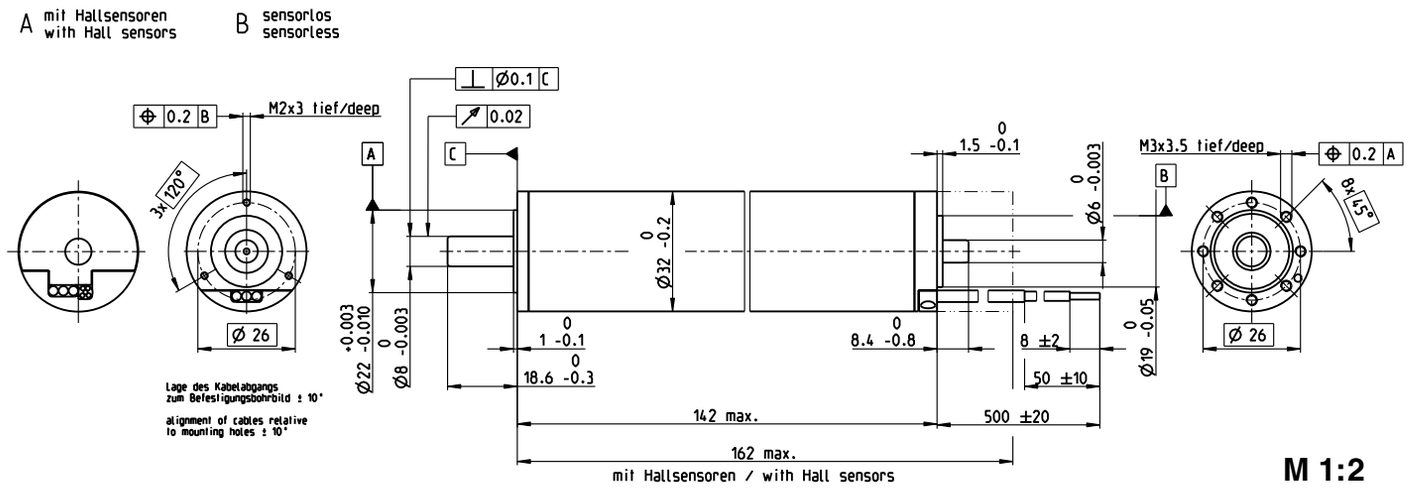

Stock program
Standard program
Special program (on request)

Part Numbers

A with Hall sensors	397799
B sensorless	397800

Motor Data (provisional)

Values at nominal voltage and ambient temperature °C		25	100	150	200
1 Nominal voltage	V	48	48	48	48
2 No load speed	rpm	6420	6630	6750	6860
3 No load current	mA	482	222	212	216
4 Nominal speed[1]	rpm	4350	4420	4700	5340
5 Nominal torque (max. continuous torque)[1]	mNm	961	762	596	379
6 Nominal current (max. continuous current)	A	13.5	10.9	8.75	5.78
7 Stall torque	mNm	3350	2520	2150	1860
8 Starting current	A	47.5	36.7	31.9	28.1
9 Max. efficiency	%	82	85	85	84
Characteristics					
10 Terminal resistance phase to phase	Ω	1.01	1.31	1.51	1.71
11 Terminal inductance phase to phase	mH	0.298	0.298	0.298	0.298
12 Torque constant	mNm/A	70.5	68.7	67.4	66.2
13 Speed constant	rpm/V	135	139	142	144
14 Speed / torque gradient	rpm/mNm	1.94	2.65	3.16	3.71
15 Mechanical time constant	ms	2.85	3.88	4.64	5.45
16 Rotor inertia	gcm²	140	140	140	140

[1] Values for operation in thermal equilibrium.

Specifications

Thermal data		
17 Thermal resistance housing-ambient		0.284 K/W
18 Thermal resistance winding-housing		0.305 K/W
19 Thermal time constant winding		9.78 s
20 Thermal time constant motor		104 s
21 Ambient temperature		-55 … +200°C
22 Max. permissible winding temperature		+240°C
Mechanical data (preloaded ball bearings)		
23 Max. permissible speed		12000 rpm
24 Axial play at axial load	< 20 N	0 mm
	> 20 N	max. 0.14 mm
25 Radial play		preloaded
26 Max. axial load (dynamic)		16 N
27 Max. force for press fits (static)		80 N
(static, shaft supported)		3000 N
28 Max. radial loading, 5 mm from flange		75 N
Other specifications		
29 Number of pole pairs		2
30 Number of phases		3
31 Weight of motor (sensorless)		860 g

Connection A, motor cable PTFE (AWG 14)
red Motor winding 1
black Motor winding 2
white Motor winding 3
Connection A, sensors cable PTFE (AWG 24)
green V_{Hall} 4.5…24 V
blue GND
red Hall sensor 1
black Hall sensor 2
white Hall sensor 3
Connection B, motor cable PTFE (AWG 14)
red Motor winding 1
black Motor winding 2
white Motor winding 3

Operating Range

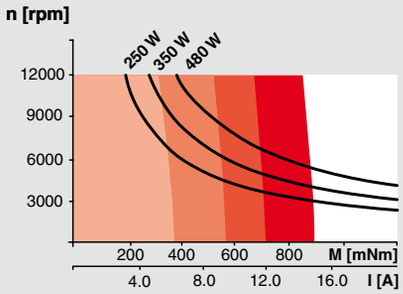

Comments

TA = 25°C
TA = 100°C
TA = 150°C
TA = 200°C

Continuous operation
In observation of above listed thermal resistance (lines 17 and 18) the maximum permissible winding temperature will be reached during continuous operation at 25°C ambient.
= Thermal limit.

Short term operation
The motor may be briefly overloaded (recurring).

Assigned power rating

Application

General
– extreme temperature applications
– vibration tested (according to MIL-STD810F/Jan2000 Fig. 514.5C-10)
– operation in oil and high pressure (only minimal lubrication, therefore use under rated ambient conditions is not suggested)

Oil & Gas Industry
– oil, gas and geothermal wells

Notice

This motor contains leaded solder. It therefore does not fulfill the requirements for the permitted maximum concentration of hazardous substances in accordance with the EC directive 2011/65/EC (RoHS) for all applications. The motor may therefore only be used for devices that are not subject to this directive.

Reference medium: Shell Tellus oil T15
Operation in oil of different viscosity will affect the motor data.

maxon Modular System

Overview on page 20–25

Planetary Gearhead
∅32 mm
3.0 - 8.0 Nm
Page 280

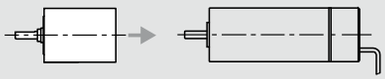

maxon flat motor

maxon flat motor

Thanks to their flat design, the brushless EC motors with iron-core winding are exactly the right drive for many applications. The well-conceived, simple engineering allows mainly automated production which results in a favorable price.

EC flat motors
9.2–90 mm in diameter **218–237**

EC 9.2 flat ∅10 mm, brushless, 0.5 Watt

A with Hall sensors

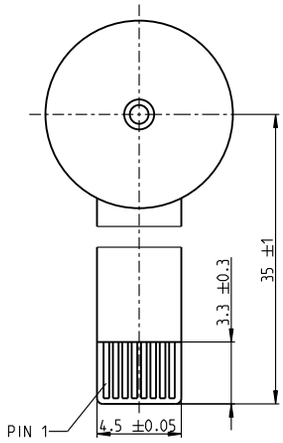

B sensorless

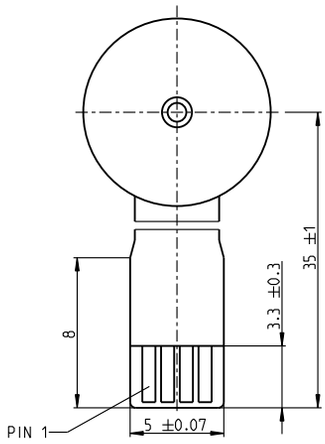

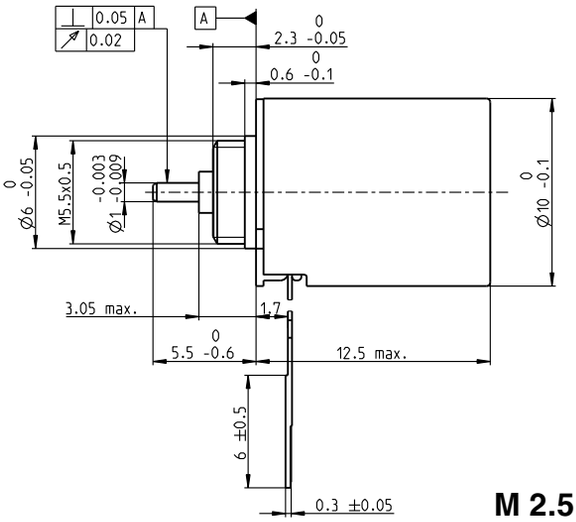

M 2.5:1

Stock program
Standard program
Special program (on request)

Part Numbers

A with Hall sensors	362790	370444	370445
B sensorless	371119	371120	371122

Motor Data (provisional)

	Values at nominal voltage				
1	Nominal voltage	V	3	4.5	6
2	No load speed	rpm	14500	15100	15600
3	No load current	mA	53.9	38.3	30.9
4	Nominal speed	rpm	4830	5260	5240
5	Nominal torque	mNm	0.764	0.809	0.684
6	Nominal current	A	0.447	0.327	0.222
7	Stall torque	mNm	1.22	1.32	1.1
8	Starting current	A	0.675	0.507	0.332
9	Max. efficiency	%	53	54	50
	Characteristics				
10	Terminal resistance phase to phase	Ω	4.44	8.88	18.1
11	Terminal inductance phase to phase	mH	0.12	0.25	0.4
12	Torque constant	mNm/A	1.81	2.61	3.3
13	Speed constant	rpm/V	5270	3660	2890
14	Speed/torque gradient	rpm/mNm	12900	12500	15800
15	Mechanical time constant	ms	32.1	30.9	39.3
16	Rotor inertia	gcm²	0.237	0.237	0.237

Specifications

	Thermal data	
17	Thermal resistance housing-ambient	49.2 K/W
18	Thermal resistance winding-housing	13.2 K/W
19	Thermal time constant winding	1.47 s
20	Thermal time constant motor	73.8 s
21	Ambient temperature	-20…+85°C
22	Max. permissible winding temperature	+100°C
	Mechanical data (preloaded ball bearings)	
23	Max. permissible speed	25000 rpm
24	Axial play at axial load < 0.5 N	0 mm
	> 0.5 N	0.1 mm
25	Radial play	preloaded
26	Max. axial load (dynamic)	0.15 N
27	Max. force for press fits (static)	15 N
	(static, shaft supported)	70 N
28	Max. radial loading, 4 mm from flange	0.4 N
	Other specifications	
29	Number of pole pairs	4
30	Number of phases	3
31	Weight of motor	3 g

Values listed in the table are nominal.

Connection	**with Hall sensors**	**sensorless**
Pin 1	Motor winding 1	Motor winding 1
Pin 2	Motor winding 2	Motor winding 2
Pin 3	Motor winding 3	Motor winding 3
Pin 4	V_{Hall} 3.8...24 VDC	Y
Pin 5	GND	
Pin 6	Hall sensor 1	
Pin 7	Hall sensor 2	
Pin 8	Hall sensor 3	
Connector	**Part number**	**Part number**
Molex	52745-0897	52207-0433
Molex		52089-0419
Tyco		84953-4

Pin for design with Hall sensors:
FPC, 8-pol, Pitch 0.5 mm, top contact style
Wiring diagram for Hall sensors see p. 35

Option
Sleeve bearings in place of ball bearings

Operating Range

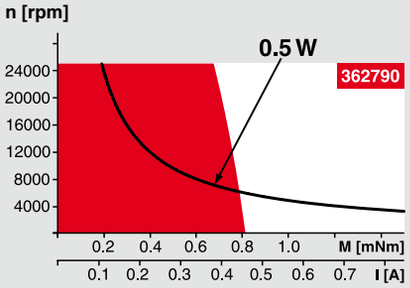

Comments

Continuous operation
In observation of above listed thermal resistance (lines 17 and 18) the maximum permissible winding temperature will be reached during continuous operation at 25°C ambient.
= Thermal limit.

Short term operation
The motor may be briefly overloaded (recurring).

Assigned power rating

maxon Modular System

Overview on page 20–25

Planetary Gearhead
∅10 mm
0.005 - 0.1 Nm
Page 244

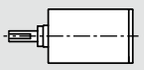

Planetary Gearhead
∅10 mm
0.01 - 0.15 Nm
Page 245

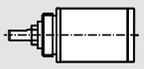

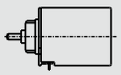

Recommended Electronics:

ESCON 36/3 EC	Page 342
ESCON Mod. 50/4 EC-S	343
DEC Module 24/2	346
EPOS2 24/2	350
EPOS2 Module 36/2	350
Notes	**24**

EC 10 flat ∅10 mm, brushless, 0.2 Watt

A with Hall sensors

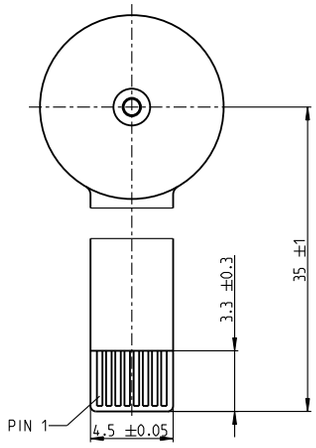

B sensorless

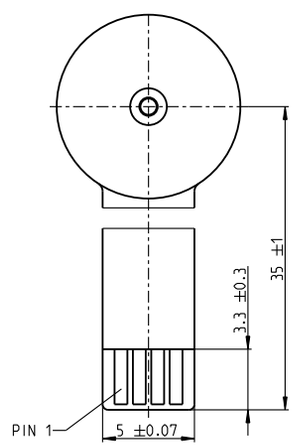

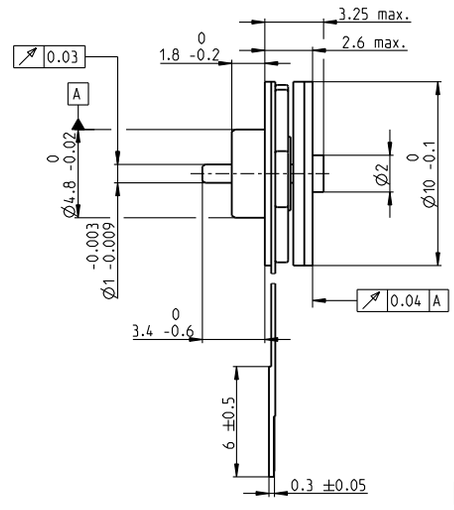

M 2.5:1

Stock program
Standard program
Special program (on request)

Part Numbers

A with Hall sensors	302000
B sensorless	301999

Motor Data (provisional)

	Values at nominal voltage		
1	Nominal voltage	V	4
2	No load speed	rpm	16600
3	No load current	mA	14.8
4	Nominal speed	rpm	–
5	Nominal torque	mNm	0.25
6	Nominal current	A	0.122
7	Stall torque	mNm	0.202
8	Starting current	A	0.103
9	Max. efficiency	%	41
	Characteristics		
10	Terminal resistance phase to phase	Ω	38.8
11	Terminal inductance phase to phase	mH	0.277
12	Torque constant	mNm/A	1.96
13	Speed constant	rpm/V	4870
14	Speed/torque gradient	rpm/mNm	96500
15	Mechanical time constant	ms	80.8
16	Rotor inertia	gcm^2	0.08

Specifications

	Thermal data		
17	Thermal resistance housing-ambient		50 K/W
18	Thermal resistance winding-housing		50 K/W
19	Thermal time constant winding		2.22 s
20	Thermal time constant motor		20.5 s
21	Ambient temperature		-40…+85°C
22	Max. permissible winding temperature		+100°C
	Mechanical data (preloaded ball bearings)		
23	Max. permissible speed		22000 rpm
24	Axial play at axial load	< 0.15 N	0 mm
		> 0.15 N	0.06 mm
25	Radial play		preloaded
26	Max. axial load (dynamic)		1 N
27	Max. force for press fits (static)		6 N
	(static, shaft supported)		20 N
28	Max. radial loading, 1 mm from flange		1 N
	Other specifications		
29	Number of pole pairs		4
30	Number of phases		3
31	Weight of motor		0.82 g

Values listed in the table are nominal.

Connection	**with Hall sensors**	**sensorless**
Pin 1	Motor winding 3	Motor winding 1
Pin 2	Motor winding 2	Motor winding 2
Pin 3	Hall sensor 3	Motor winding 3
Pin 4	V_{Hall} 3.8...24 VDC	N.C.
Pin 5	GND	
Pin 6	Hall sensor 1	
Pin 7	Hall sensor 2	
Pin 8	Motor winding 1	
Connector	**Part number**	**Part number**
Molex	52745-0897	52207-0433
Molex		52089-0419
Tyco		84953-4

Pin for design with Hall sensors:
FPC, 8-pol, Pitch 0.5 mm, top contact style
Wiring diagram for Hall sensors see p. 35

Operating Range

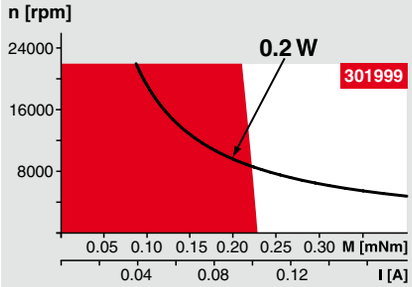

Comments

Continuous operation
In observation of above listed thermal resistance (lines 17 and 18) the maximum permissible winding temperature will be reached during continuous operation at 25°C ambient.
= Thermal limit.

Short term operation
The motor may be briefly overloaded (recurring).

Assigned power rating

maxon Modular System

Overview on page 20–25

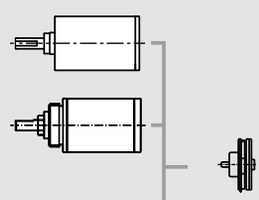

Planetary Gearhead
∅10 mm
0.005 - 0.1 Nm
Page 244

Planetary Gearhead
∅10 mm
0.01 - 0.15 Nm
Page 245

Recommended Electronics:

ESCON 36/3 EC	Page 342
ESCON Mod. 50/4 EC-S	343
DEC Module 24/2	346
EPOS2 24/2	350
Notes	**24**

EC 14 flat ∅13.6 mm, brushless, 1.5 Watt

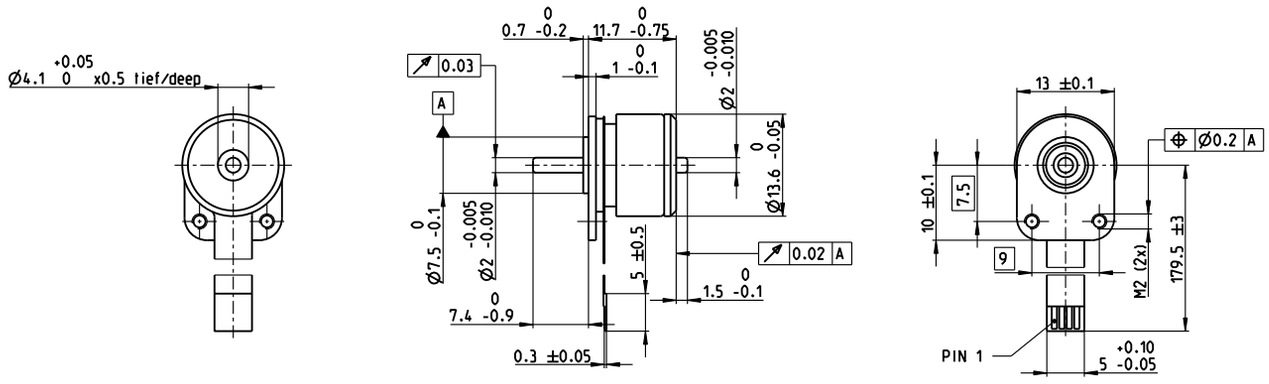

M 1:1

Stock program
Standard program
Special program (on request)

Part Numbers

	sensorless	339251	339252	236679	339253
Motor Data					
Values at nominal voltage					
1 Nominal voltage	V	6	12	18	24
2 No load speed	rpm	20000	20100	19900	20000
3 No load current	mA	156	78.1	51.7	38.9
4 Nominal speed	rpm	9600	9680	9390	9590
5 Nominal torque (max. continuous torque)	mNm	1.8	1.83	1.74	1.81
6 Nominal current (max. continuous current)	A	0.794	0.402	0.256	0.199
7 Stall torque	mNm	3.79	3.87	3.6	3.8
8 Starting current	A	1.5	0.764	0.474	0.374
9 Max. efficiency	%	49	49	48	49
Characteristics					
10 Terminal resistance phase to phase	Ω	4.01	15.7	38	64.1
11 Terminal inductance phase to phase	mH	0.107	0.428	0.962	1.71
12 Torque constant	mNm/A	2.53	5.06	7.6	10.1
13 Speed constant	rpm/V	3770	1890	1260	942
14 Speed/torque gradient	rpm/mNm	5980	5860	6270	5960
15 Mechanical time constant	ms	68.9	67.5	72.3	68.6
16 Rotor inertia	gcm²	1.1	1.1	1.1	1.1

Specifications

Thermal data		
17 Thermal resistance housing-ambient		11.6 K/W
18 Thermal resistance winding-housing		11.3 K/W
19 Thermal time constant winding		1.37 s
20 Thermal time constant motor		49.2 s
21 Ambient temperature		-40…+100°C
22 Max. permissible winding temperature		+125°C
Mechanical data (preloaded ball bearings)		
23 Max. permissible speed		22000 rpm
24 Axial play at axial load	< 1.5 N	0 mm
	> 1.5 N	0.14 mm
25 Radial play		preloaded
26 Max. axial load (dynamic)		1.3 N
27 Max. force for press fits (static)		18 N
(static, shaft supported)		200 N
28 Max. radial loading, 5 mm from flange		1.8 N
Other specifications		
29 Number of pole pairs		4
30 Number of phases		3
31 Weight of motor		8 g

Values listed in the table are nominal.

Connection

Pin 1	Motor winding 1
Pin 2	Motor winding 2
Pin 3	Motor winding 3
Pin 4	⅄ neutral point
Adapter	**Part number**
see p. 362	220310
Connector	**Part number**
Tyco	84953-4
Molex	52207-0433
Molex	52089-0419

Operating Range

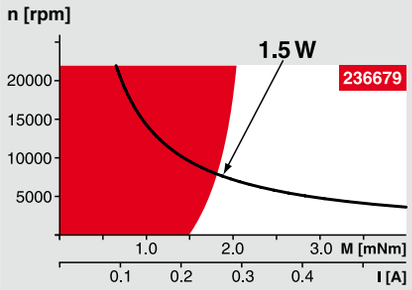

Comments

Continuous operation
In observation of above listed thermal resistance (lines 17 and 18) the maximum permissible winding temperature will be reached during continuous operation at 25°C ambient.
= Thermal limit.

Short term operation
The motor may be briefly overloaded (recurring).

Assigned power rating

maxon Modular System

Overview on page 20–25

Recommended Electronics:
ESCON Mod. 50/4 EC-S 343
Notes **24**

EC 20 flat ∅20 mm, brushless, 3 Watt

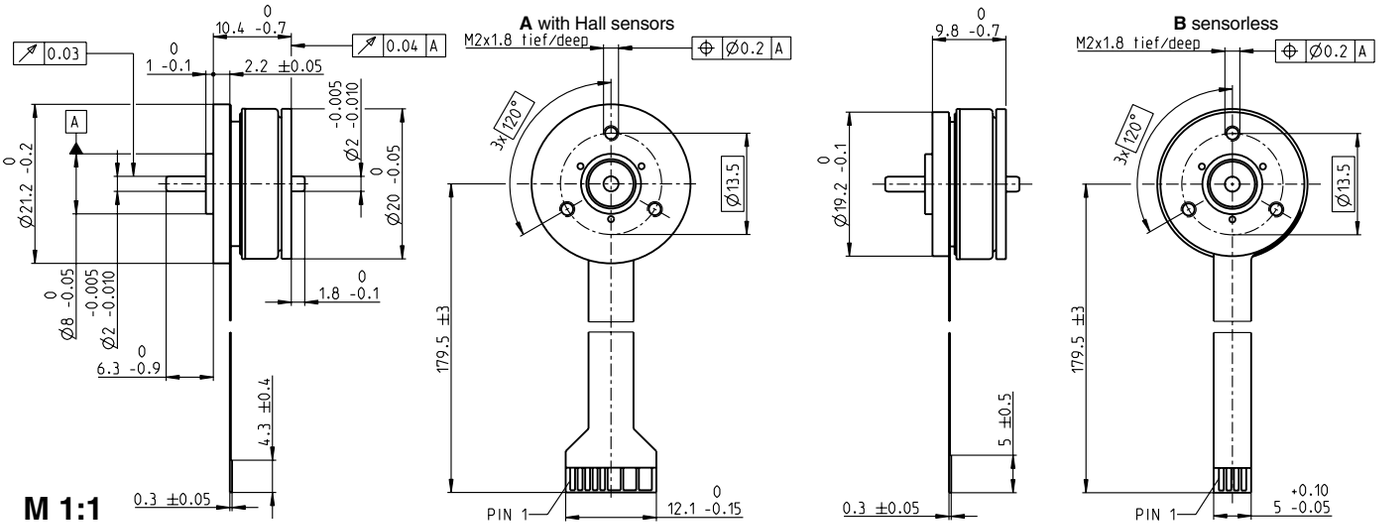

Stock program
Standard program
Special program (on request)

Part Numbers

A with Hall sensors	351098	351099	351100	351101
B sensorless	339255	241916	339257	339258

Motor Data

	Values at nominal voltage					
1	Nominal voltage	V	6	9	12	24
2	No load speed	rpm	9070	9760	9540	9450
3	No load current	mA	53.6	35.1	25.8	12.6
4	Nominal speed	rpm	3030	4140	3490	3830
5	Nominal torque (max. continuous torque)	mNm	3.22	4.08	3.28	3.78
6	Nominal current (max. continuous current)	A	0.56	0.478	0.294	0.163
7	Stall torque	mNm	5.29	8.04	5.67	7.12
8	Starting current	A	0.9	0.957	0.503	0.309
9	Max. efficiency	%	59	66	61	65
	Characteristics					
10	Terminal resistance phase to phase	Ω	6.67	9.4	23.9	77.7
11	Terminal inductance phase to phase	mH	0.639	1.3	2.35	9.8
12	Torque constant	mNm/A	5.88	8.4	11.3	23
13	Speed constant	rpm/V	1620	1140	847	414
14	Speed/torque gradient	rpm/mNm	1840	1270	1790	1400
15	Mechanical time constant	ms	74.1	51.2	72.1	56.2
16	Rotor inertia	gcm^2	3.84	3.84	3.84	3.84

Specifications

	Thermal data	
17	Thermal resistance housing-ambient	19.2 K/W
18	Thermal resistance winding-housing	8.41 K/W
19	Thermal time constant winding	3.69 s
20	Thermal time constant motor	31.8 s
21	Ambient temperature	-40…+100°C
22	Max. permissible winding temperature	+125°C
	Mechanical data (preloaded ball bearings)	
23	Max. permissible speed	15000 rpm
24	Axial play at axial load < 2.0 N	0 mm
	> 2.0 N	0.14 mm
25	Radial play	preloaded
26	Max. axial load (dynamic)	1.8 N
27	Max. force for press fits (static)	18 N
	(static, shaft supported)	200 N
28	Max. radial loading, 5 mm from flange	1.8 N
	Other specifications	
29	Number of pole pairs	4
30	Number of phases	3
31	Weight of motor	15 g

Values listed in the table are nominal.

Connection	**with Hall sensors**	**sensorless**
Pin 1	V_{Hall} 4.5…24 VDC	Motor winding 1
Pin 2	Hall sensor 3	Motor winding 2
Pin 3	Hall sensor 1	Motor winding 3
Pin 4	Hall sensor 2	⊥ neutral point
Pin 5	GND	
Pin 6	Motor winding 3	
Pin 7	Motor winding 2	
Pin 8	Motor winding 1	
Adapter	**Part number**	**Part number**
see p. 362	220300	220310
Connector	**Part number**	**Part number**
Tyco	1-84953-1	84953-4
Molex	52207-1133	52207-0433
Molex	52089-1119	52089-0419

Pin for design with Hall sensors:
FPC, 11-pol, Pitch 1.0 mm, top contact style
Wiring diagram for Hall sensors see p. 35

Operating Range

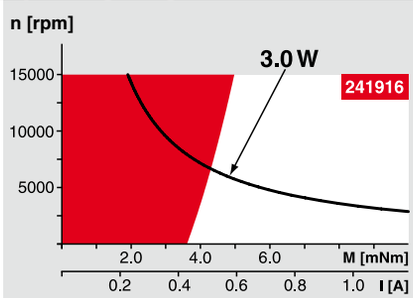

Comments

Continuous operation
In observation of above listed thermal resistance (lines 17 and 18) the maximum permissible winding temperature will be reached during continuous operation at 25°C ambient.
= Thermal limit.

Short term operation
The motor may be briefly overloaded (recurring).

Assigned power rating

maxon Modular System

Overview on page 20–25

Spur Gearhead
∅20.3 mm
0.06 - 0.25 Nm
Page 259

Planetary Gearhead
∅22 mm
0.5 - 2.0 Nm
Page 262/265

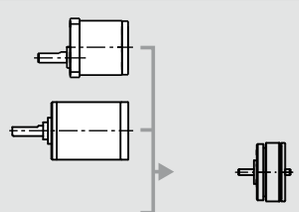

Recommended Electronics:

ESCON 36/3 EC	Page 342
ESCON Mod. 50/4 EC-S	343
ESCON Module 50/5	343
ESCON 50/5	344
DEC Module 24/2	346
EPOS2 24/2	350
EPOS3 70/10 EtherCAT	357
MAXPOS 50/5	360
Notes	**24**

EC 20 flat ∅20 mm, brushless, 5 Watt

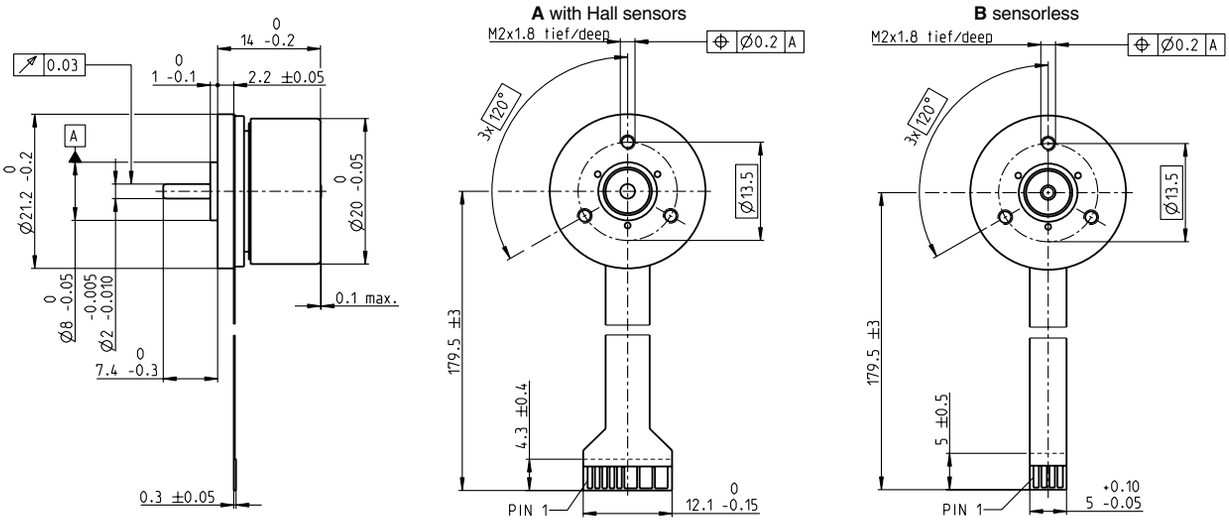

Stock program
Standard program
Special program (on request)

Part Numbers

A with Hall sensors	351005	351006	351007	351008
B sensorless	351054	351055	351056	351057

Motor Data (provisional)

	Values at nominal voltage					
1	Nominal voltage	V	6	9	12	24
2	No load speed	rpm	9350	9430	9380	9300
3	No load current	mA	102	68.3	51.1	25.1
4	Nominal speed	rpm	4780	5310	5170	5220
5	Nominal torque (max. continuous torque)	mNm	7.59	8.58	7.59	7.74
6	Nominal current (max. continuous current)	A	1.31	0.974	0.655	0.329
7	Stall torque	mNm	17.2	22.4	18.9	19.9
8	Starting current	A	2.93	2.54	1.61	0.838
9	Max. efficiency	%	67	71	68	69
	Characteristics					
10	Terminal resistance phase to phase	Ω	2.05	3.54	7.45	28.6
11	Terminal inductance phase to phase	mH	0.189	0.424	0.754	3.09
12	Torque constant	mNm/A	5.88	8.82	11.8	23.8
13	Speed constant	rpm/V	1620	1080	812	402
14	Speed/torque gradient	rpm/mNm	567	435	515	484
15	Mechanical time constant	ms	30.3	23.2	27.5	25.8
16	Rotor inertia	gcm²	5.1	5.1	5.1	5.1

Specifications

	Thermal data	
17	Thermal resistance housing-ambient	16.5 K/W
18	Thermal resistance winding-housing	2.66 K/W
19	Thermal time constant winding	1.77 s
20	Thermal time constant motor	27.5 s
21	Ambient temperature	-40…+100°
22	Max. permissible winding temperature	+125°C
	Mechanical data (preloaded ball bearings)	
23	Max. permissible speed	15000 rpm
24	Axial play at axial load < 2.0 N	0 mm
	> 2.0 N	0.14 mm
25	Radial play	preloaded
26	Max. axial load (dynamic)	1.8 N
27	Max. force for press fits (static)	26 N
	(static, shaft supported)	200 N
28	Max. radial loading, 5 mm from flange	10 N
	Other specifications	
29	Number of pole pairs	4
30	Number of phases	3
31	Weight of motor	22 g

Values listed in the table are nominal.

Connection	**with Hall sensors**	**sensorless**
Pin 1	V_{Hall} 4.5…24 VDC	Motor winding 1
Pin 2	Hall sensor 3	Motor winding 2
Pin 3	Hall sensor 1	Motor winding 3
Pin 4	Hall sensor 2	⅄ neutral point
Pin 5	GND	
Pin 6	Motor winding 3	
Pin 7	Motor winding 2	
Pin 8	Motor winding 1	
Adapter	**Part number**	**Part number**
see p. 362	220300	220310
Connector	**Part number**	**Part number**
Tyco	1-84953-1	84953-4
Molex	52207-1133	52207-0433
Molex	52089-1119	52089-0419

Pin for design with Hall sensors:
FPC, 11-pol, Pitch 1.0 mm, top contact style
Wiring diagram for Hall sensors see p. 35

Operating Range

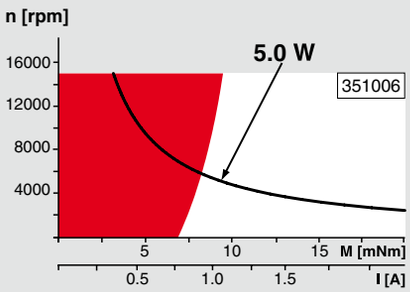

Comments

Continuous operation
In observation of above listed thermal resistance (lines 17 and 18) the maximum permissible winding temperature will be reached during continuous operation at 25°C ambient.
= Thermal limit.

Short term operation
The motor may be briefly overloaded (recurring).

Assigned power rating

maxon Modular System

Overview on page 20–25

Spur Gearhead
∅20.3 mm
0.06 - 0.25 Nm
Page 259

Planetary Gearhead
∅22 mm
0.5 - 2.0 Nm
Page 262/265

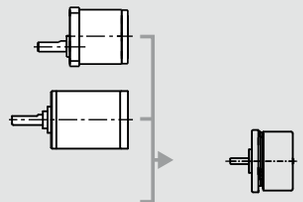

Recommended Electronics:

ESCON 36/3 EC	Page 342
ESCON Mod. 50/4 EC-S	343
ESCON Module 50/5	343
ESCON 50/5, 70/10	344
DEC Module 24/2	346
EPOS2 24/2	350
EPOS3 70/10 EtherCAT	357
MAXPOS 50/5	360
Notes	**24**

EC 20 flat brushless, 2 Watt, with integrated electronics

1-Q-speed controller

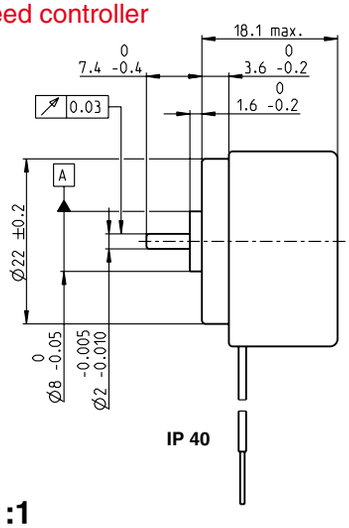

IP 40

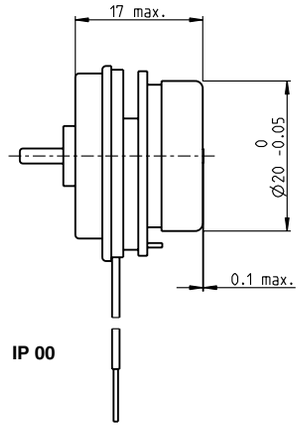

IP 00

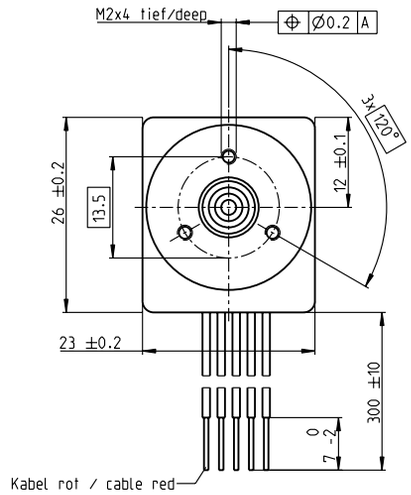

M 1:1

Stock program
Standard program
Special program (on request)

Part Numbers

	2 wire version		5 wire version Enable	5 wire version Direction
IP 40 (with cover)	350795	350796	350794	370413
IP 00 (without cover)	350776	350778	349694	370412

Motor Data

	Values at nominal voltage					
1	Nominal voltage	V	24	24	24	24
2	No load speed	rpm	3000	6000	6000	6000
3	No load current	mA	10.6	14.7	14.7	14.7
4	Nominal speed	rpm	3000	6000	6000	6000
5	Nominal torque (max. continuous torque)	mNm	3.6	3.55	3.55	3.55
6	Nominal current (max. continuous current)	A	0.155	0.208	0.208	0.208
33	Max. torque	mNm	6.13	6.13	6.13	6.13
34	Max. current	A	0.73	0.73	0.73	0.73
9	Max. efficiency	%	39	52	52	52
	Characteristics					
35	Type of control		Speed	Speed	Speed	Speed
36	Supply voltage $+V_{CC}$	V	10…28	10…28	10…28	10…28
37	Speed set value input	V	$= V_{CC}$	$= V_{CC}$	0.33…10.8	0.33…10.8
38	Scale speed set value input	rpm/V	125	250	600	600
39	Speed range	rpm	1250…3500	2500…7000	200…6480	200…6480
40	Max. acceleration	rpm/s	3000	6000	6000	6000

Specifications

	Thermal data	
17	Thermal resistance housing-ambient	17.2 K/W
18	Thermal resistance winding-housing	7.98 K/W
19	Thermal time constant winding	2.37 s
20	Thermal time constant motor	132 s
21	Ambient temperature	-40…+85°C
22	Max. permissible winding temperature	+125°C
41	Max. temperature of electronics	+105°C
	Mechanical data (preloaded ball bearings)	
16	Rotor inertia	3.84 gcm²
24	Axial play at axial load < 2.0 N	0 mm
	> 2.0 N	0.14 mm
25	Radial play	preloaded
26	Max. axial load (dynamic)	1.8 N
27	Max. force for press fits (static)	26 N
	(static, shaft supported)	200 N
28	Max. radial loading, 5 mm from flange	11 N
	Other specifications	
31	Weight of motor	30 g
32	Direction of rotation	Clockwise (CW)

Values listed in the table are nominal.

Protective functions
Overload protection, blockage protection, inverse-polarity protection, thermal overload protection, low/high voltage cut-off

Connection 2 wire version (Cable AWG 28)
red $+V_{CC}$ 10…28 VDC
black GND

Connection 5 wire version (Cable AWG 28)
red $+V_{CC}$ 10…28 VDC
black GND
white Speed set value input
green Monitor n (6 pulses per revolution)
grey Disable (Type Enable) or sense of direction (Type Direction)

Operating Range

n [rpm]

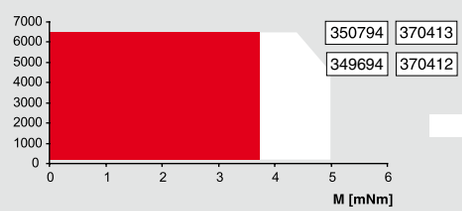

n [rpm]

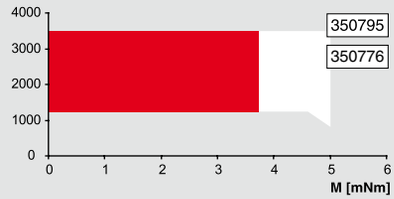

Comments

Continuous operation
The drive can be operated with a speed controller and, taking account of the given thermal resistance (fig. 17 and 18) at an ambient temperature of 25°C, does not exceed the maximum permissible operating temperatures.

Overload range
The drive reaches these operating points. Speed may vary from the set value. The overload protection shuts down the drive in the event of sustained overload.

n [rpm]

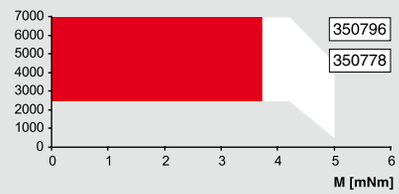

maxon Modular System

Overview on page 20–25

Spur Gearhead
∅20.3 mm
0.06 - 0.25 Nm
Page 259

Planetary Gearhead
∅22 mm
0.5 - 2.0 Nm
Page 262/265

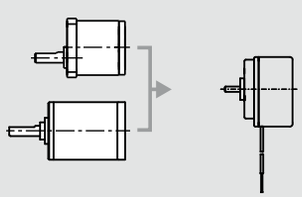

EC 20 flat brushless, 5 Watt, with integrated electronics

1-Q-speed controller

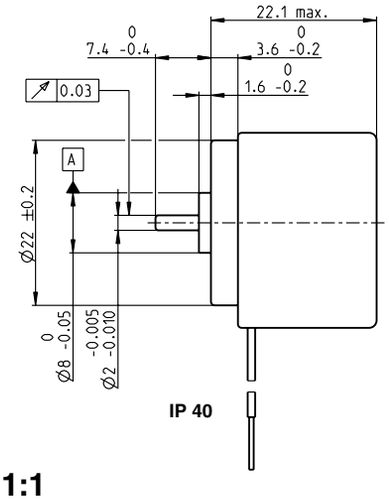

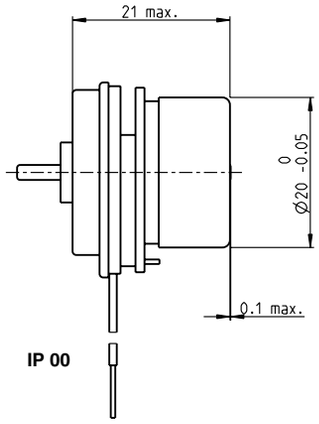

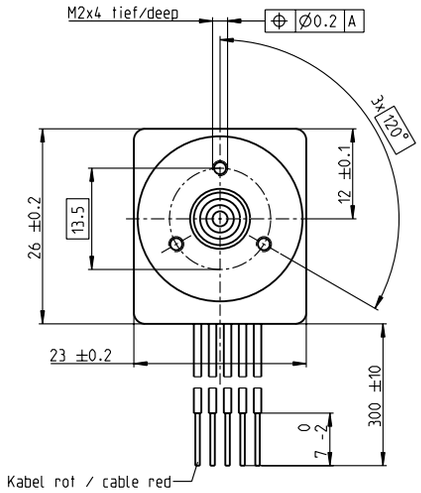

M 1:1

Stock program
Standard program
Special program (on request)

Part Numbers

	2 wire version		5 wire version Enable	5 wire version Direction
IP 40 (with cover)	350834	350835	350806	370416
IP 00 (without cover)	350804	350805	349731	370415

Motor Data

	Values at nominal voltage					
1	Nominal voltage	V	24	24	24	24
2	No load speed	rpm	3000	6000	6000	6000
3	No load current	mA	18.6	32.9	32.9	32.9
4	Nominal speed	rpm	3000	6000	6000	6000
5	Nominal torque (max. continuous torque)	mNm	7.45	7.31	7.31	7.31
6	Nominal current (max. continuous current)	A	0.263	0.377	0.377	0.377
33	Max. torque	mNm	13.2	13.2	13.2	13.2
34	Max. current	A	0.73	0.73	0.73	0.73
9	Max. efficiency	%	44	54	54	54
	Characteristics					
35	Type of control		Speed	Speed	Speed	Speed
36	Supply voltage $+V_{CC}$	V	10…28	10…28	10…28	10…28
37	Speed set value input	V	= V_{CC}	= V_{CC}	0.33…10.8	0.33…10.8
38	Scale speed set value input	rpm/V	125	250	600	600
39	Speed range	rpm	1250…3500	2500…7000	200…6480	200…6480
40	Max. acceleration	rpm/s	3000	6000	6000	6000

Specifications

	Thermal data		
17	Thermal resistance housing-ambient		10.6 K/W
18	Thermal resistance winding-housing		5.32 K/W
19	Thermal time constant winding		3.66 s
20	Thermal time constant motor		13.9 s
21	Ambient temperature		-40…+85°C
22	Max. permissible winding temperature		+125°C
41	Max. temperature of electronics		+105°C
	Mechanical data (preloaded ball bearings)		
16	Rotor inertia		5.1 gcm²
24	Axial play at axial load	< 2.0 N	0 mm
		> 2.0 N	0.14 mm
25	Radial play		preloaded
26	Max. axial load (dynamic)		1.8 N
27	Max. force for press fits (static)		26 N
	(static, shaft supported)		200 N
28	Max. radial loading, 5 mm from flange		12 N
	Other specifications		
31	Weight of motor		37 g
32	Direction of rotation		Clockwise (CW)

Values listed in the table are nominal.

Protective functions
Overload protection, blockage protection, inverse-polarity protection, thermal overload protection, low/high voltage cut-off

Connection 2 wire version (Cable AWG 28)
red $+V_{CC}$ 10…28 VDC
black GND

Connection 5 wire version (Cable AWG 28)
red $+V_{CC}$ 10…28 VDC
black GND
white Speed set value input
green Monitor n (6 pulses per revolution)
grey Disable (Type Enable) or sense of direction (Type Direction)

Operating Range

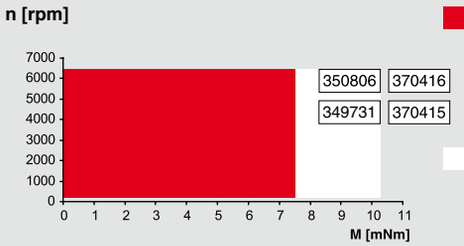

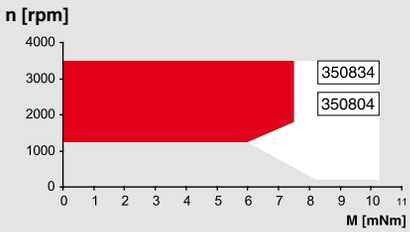

Comments

Continuous operation
The drive can be operated with a speed controller and, taking account of the given thermal resistance (fig. 17 and 18) at an ambient temperature of 25°C, does not exceed the maximum permissible operating temperatures.

Overload range
The drive reaches these operating points. Speed may vary from the set value. The overload protection shuts down the drive in the event of sustained overload.

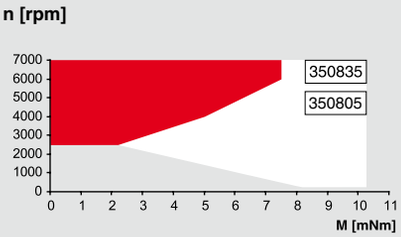

maxon Modular System

Overview on page 20–25

Spur Gearhead
∅20.3 mm
0.06 - 0.25 Nm
Page 259

Planetary Gearhead
∅22 mm
0.5 - 2.0 Nm
Page 262/265

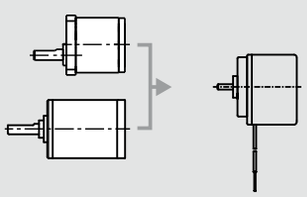

EC 32 flat ∅32 mm, brushless, 6 Watt

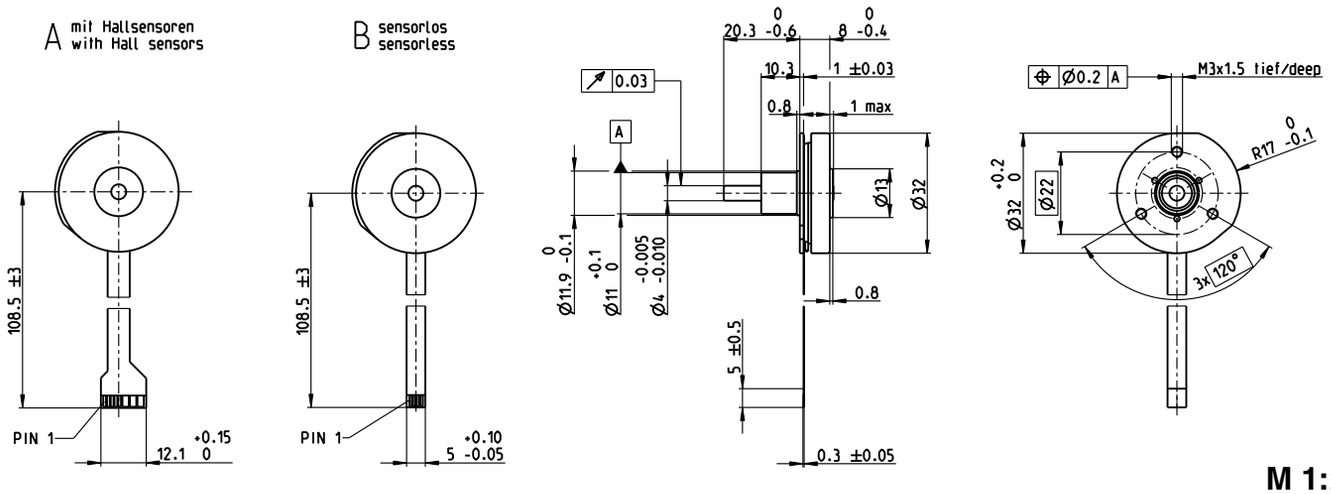

M 1:2

Stock program
Standard program
Special program (on request)

Part Numbers

A with Hall sensors	339259	200187	339260	339261
B sensorless	339263	200138	339264	339265

Motor Data

	Values at nominal voltage					
1	Nominal voltage	V	6	9	12	24
2	No load speed	rpm	9210	8380	7970	9310
3	No load current	mA	186	107	75.6	46.2
4	Nominal speed	rpm	3860	3640	3210	4480
5	Nominal torque (max. continuous torque)	mNm	7.61	8.89	7.98	9.42
6	Nominal current (max. continuous current)	A	1.37	0.929	0.614	0.401
7	Stall torque	mNm	15.5	19	15.7	22.8
8	Starting current	A	2.73	2	1.19	0.995
9	Max. efficiency	%	55	60	57	62
	Characteristics					
10	Terminal resistance phase to phase	Ω	2.2	4.5	10.1	24.1
11	Terminal inductance phase to phase	mH	0.378	1.06	2.04	6.19
12	Torque constant	mNm/A	5.67	9.5	13.2	23
13	Speed constant	rpm/V	1680	1010	724	416
14	Speed/torque gradient	rpm/mNm	651	476	551	437
15	Mechanical time constant	ms	94.8	69.3	80.3	63.6
16	Rotor inertia	gcm²	13.9	13.9	13.9	13.9

Specifications

	Thermal data	
17	Thermal resistance housing-ambient	8.25 K/W
18	Thermal resistance winding-housing	6.21 K/W
19	Thermal time constant winding	3.48 s
20	Thermal time constant motor	22.1 s
21	Ambient temperature	-40…+100°C
22	Max. winding temperature	+125°C
	Mechanical data (preloaded ball bearings)	
23	Max. permissible speed	12000 rpm
24	Axial play at axial load < 5.0 N	0 mm
	> 5.0 N	typ. 0.6 mm
25	Radial play	preloaded
26	Max. axial load (dynamic)	4.8 N
27	Max. force for press fits (static)	45 N
	(static, shaft supported)	1000 N
28	Max. radial load, 7.5 mm from flange	5.5 N
	Other specifications	
29	Number of pole pairs	4
30	Number of phases	3
31	Weight of motor	32 g

Values listed in the table are nominal.

Connection	**with Hall sensors**	**sensorless**
Pin 1	V_{Hall} 3.5…24 VDC	Motor winding 1
Pin 2	Hall sensor 3	Motor winding 2
Pin 3	Hall sensor 1	Motor winding 3
Pin 4	Hall sensor 2	⊥ neutral point
Pin 5	GND	
Pin 6	Motor winding 3	
Pin 7	Motor winding 2	
Pin 8	Motor winding 1	
Adapter	**Part number**	**Part number**
see p. 362	220300	220310
Connector	**Part number**	**Part number**
Tyco	1-84953-1	84953-4
Molex	52207-1133	52207-0433
Molex	52089-1119	52089-0419

Pin for design with Hall sensors:
FPC, 11-pol, Pitch 1.0 mm, top contact style
Wiring diagram for Hall sensors see p. 35

Operating Range

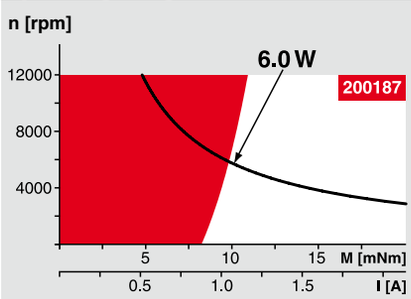

Comments

Continuous operation
In observation of above listed thermal resistance (lines 17 and 18) the maximum permissible winding temperature will be reached during continuous operation at 25°C ambient.
= Thermal limit.

Short term operation
The motor may be briefly overloaded (recurring).

Assigned power rating

maxon Modular System

Overview on page 20–25

Planetary Gearhead
∅22 mm
0.5 - 1.0 Nm
Page 262

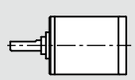

Planetary Gearhead
∅22 mm
0.5 - 2.0 Nm
Page 265

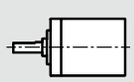

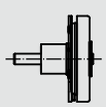

Recommended Electronics:

ESCON 36/3 EC	Page 342
ESCON Mod. 50/4 EC-S	343
ESCON Module 50/5	343
ESCON 50/5	344
DEC Module 24/2	346
DEC Module 50/5	346
EPOS2 24/2	350
EPOS2 Module 36/2	350
EPOS3 70/10 EtherCAT	357
MAXPOS 50/5	360
Notes	**24**

EC 32 flat ∅32 mm, brushless, 15 Watt

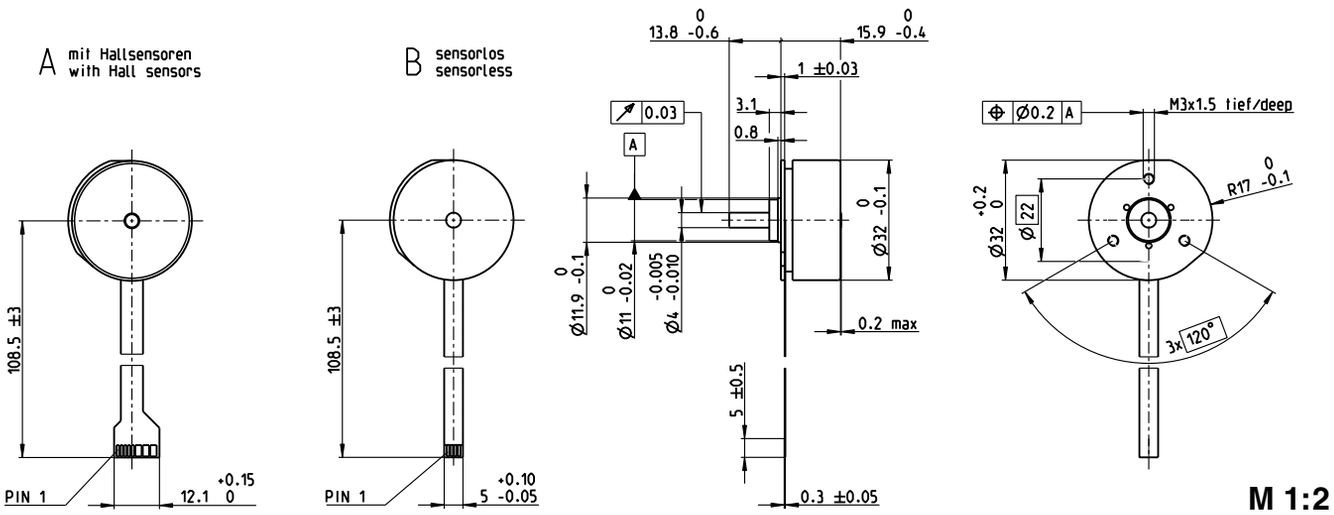

Stock program
Standard program
Special program (on request)

Part Numbers

A with Hall sensors	339267	339268	**267121**	339269
B sensorless	339271	339272	**226006**	339273

Motor Data

	Values at nominal voltage					
1	Nominal voltage	V	9	12	24	48
2	No load speed	rpm	3720	4610	4530	4780
3	No load current	mA	74.7	75.7	36.9	19.9
4	Nominal speed	rpm	2090	2810	2760	2940
5	Nominal torque (max. continuous torque)	mNm	24.6	25.1	25.5	24.7
6	Nominal current (max. continuous current)	A	1.06	1	0.5	0.257
7	Stall torque	mNm	70	84.1	85.8	84.1
8	Starting current	A	3.13	3.49	1.75	0.906
9	Max. efficiency	%	72	73	74	73
	Characteristics					
10	Terminal resistance phase to phase	Ω	2.87	3.43	13.7	53
11	Terminal inductance phase to phase	mH	1.61	1.87	7.73	27.8
12	Torque constant	mNm/A	22.4	24.1	49	92.8
13	Speed constant	rpm/V	427	397	195	103
14	Speed/torque gradient	rpm/mNm	54.9	56.6	54.5	58.7
15	Mechanical time constant	ms	20.1	20.7	20	21.5
16	Rotor inertia	gcm^2	35	35	35	35

Specifications

	Thermal data	
17	Thermal resistance housing-ambient	10.8 K/W
18	Thermal resistance winding-housing	4.99 K/W
19	Thermal time constant winding	8.78 s
20	Thermal time constant motor	120 s
21	Ambient temperature	-40…+100°C
22	Max. winding temperature	+125°C
	Mechanical data (preloaded ball bearings)	
23	Max. permissible speed	10000 rpm
24	Axial play at axial load < 5.0 N	0 mm
	> 5.0 N	typ. 0.6 mm
25	Radial play	preloaded
26	Max. axial load (dynamic)	4.8 N
27	Max. force for press fits (static)	45 N
	(static, shaft supported)	1000 N
28	Max. radial load, 7.5 mm from flange	5.5 N
	Other specifications	
29	Number of pole pairs	4
30	Number of phases	3
31	Weight of motor	46 g

Values listed in the table are nominal.

Connection	**with Hall sensors**	**sensorless**
Pin 1	V_{Hall} 3.5…24 VDC	Motor winding 1
Pin 2	Hall sensor 3	Motor winding 2
Pin 3	Hall sensor 1	Motor winding 3
Pin 4	Hall sensor 2	⅄ neutral point
Pin 5	GND	
Pin 6	Motor winding 3	
Pin 7	Motor winding 2	
Pin 8	Motor winding 1	
Adapter	**Part number**	**Part number**
see p. 362	220300	220310
Connector	**Part number**	**Part number**
Tyco	1-84953-1	84953-4
Molex	52207-1133	52207-0433
Molex	52089-1119	52089-0419

Pin for design with Hall sensors:
FPC, 11-pol, Pitch 1.0 mm, top contact style
Wiring diagram for Hall sensors see p. 35

Operating Range

Comments

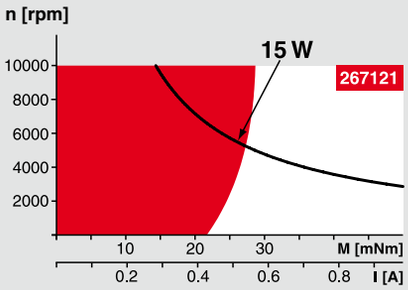

Continuous operation
In observation of above listed thermal resistance (lines 17 and 18) the maximum permissible winding temperature will be reached during continuous operation at 25°C ambient.
= Thermal limit.

Short term operation
The motor may be briefly overloaded (recurring).

Assigned power rating

maxon Modular System

Overview on page 20–25

Planetary Gearhead
∅32 mm
0.75 - 6 Nm
Page 274–277

Spur Gearhead
∅38 mm
0.1 - 0.6 Nm
Page 282

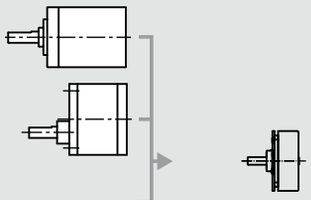

Recommended Electronics:

ESCON 36/3 EC	Page 342
ESCON Mod. 50/4 EC-S	343
ESCON Module 50/5	343
ESCON 50/5	344
DEC Module 24/2	346
DEC Module 50/5	346
EPOS2 24/2	350
EPOS2 Module 36/2	350
EPOS3 70/10 EtherCAT	357
MAXPOS 50/5	360
Notes	**24**

April 2014 edition / subject to change

EC 32 flat brushless, 15 Watt, with integrated electronics

1-Q-speed controller

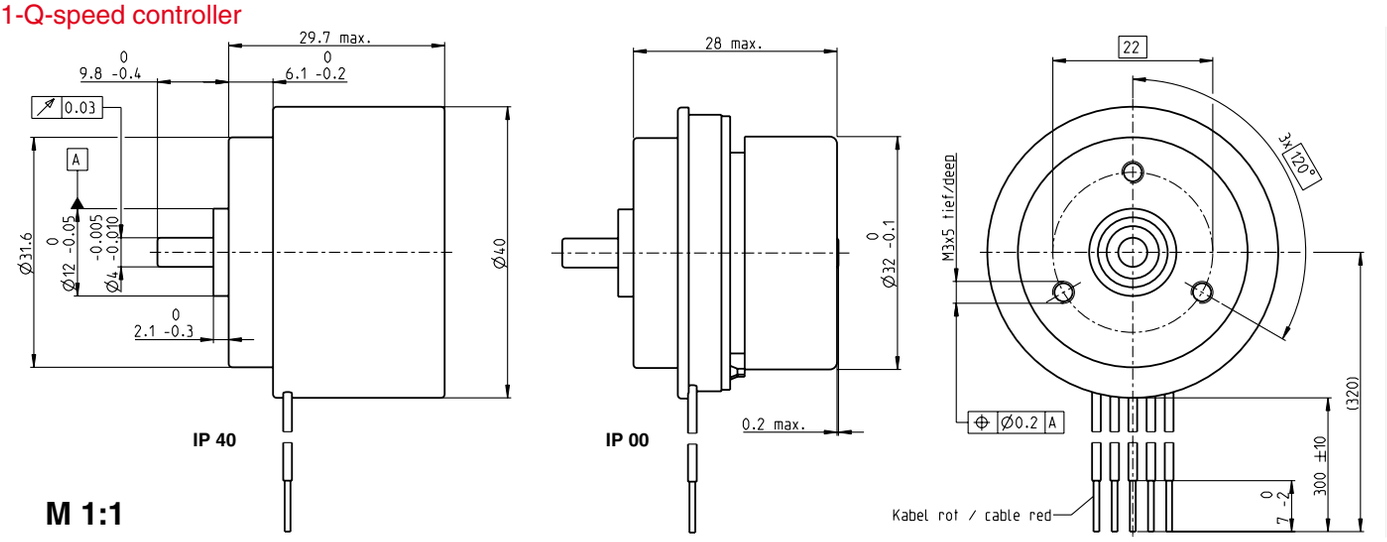

Stock program
Standard program
Special program (on request)

Part Numbers

	2 wire version		5 wire version Enable	5 wire version Direction
IP 40 (with cover)	353400	353401	353399	370418
IP 00 (without cover)	353324	353325	349801	370417

Motor Data

	Values at nominal voltage					
1	Nominal voltage	V	24	24	24	24
2	No load speed	rpm	3000	6000	6000	6000
3	No load current	mA	44.8	84.6	84.6	84.6
4	Nominal speed	rpm	3000	6000	6000	6000
5	Nominal torque (max. continuous torque)	mNm	18.8	18.6	18.6	18.6
6	Nominal current (max. continuous current)	A	0.44	0.741	0.741	0.741
33	Max. torque	mNm	35.8	35.8	35.8	35.8
34	Max. current	A	1.6	1.6	1.6	1.6
9	Max. efficiency	%	58	66	66	66
	Characteristics					
35	Type of control		Speed	Speed	Speed	Speed
36	Supply voltage $+V_{CC}$	V	10…28	10…28	10…28	10…28
37	Speed set value input	V	$= V_{CC}$	$= V_{CC}$	0.33…10.8	0.33…10.8
38	Scale speed set value input	rpm/V	125	250	600	600
39	Speed range	rpm	1250…3500	2500…7000	200…6480	200…6480
40	Max. acceleration	rpm/s	3000	6000	6000	6000

Specifications

	Thermal data	
17	Thermal resistance housing-ambient	7.24 K/W
18	Thermal resistance winding-housing	4.99 K/W
19	Thermal time constant winding	8.69 s
20	Thermal time constant motor	80.5 s
21	Ambient temperature	-40…+85°C
22	Max. permissible winding temperature	+125°C
41	Max. temperature of electronics	+105°C
	Mechanical data (preloaded ball bearings)	
16	Rotor inertia	35 gcm²
24	Axial play at axial load < 5.0 N	0 mm
	> 5.0 N	0.14 mm
25	Radial play	preloaded
26	Max. axial load (dynamic)	6.8 N
27	Max. force for press fits (static)	95 N
	(static, shaft supported)	1000 N
28	Max. radial loading, 8 mm from flange	32 N
	Other specifications	
31	Weight of motor	91 g
32	Direction of rotation	Clockwise (CW)

Values listed in the table are nominal.

Protective functions
Overload protection, blockage protection, inverse-polarity protection, thermal overload protection, low/high voltage cut-off

Connection 2 wire version (Cable AWG 24)
red $+V_{CC}$ 10…28 VDC
black GND

Connection 5 wire version (Cable AWG 24)
red $+V_{CC}$ 10…28 VDC
black GND
white Speed set value input
green Monitor n (6 pulses per revolution)
grey Disable (Type Enable) or sense of direction (Type Direction)

Operating Range

n [rpm]

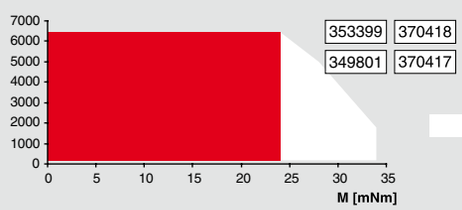

n [rpm]

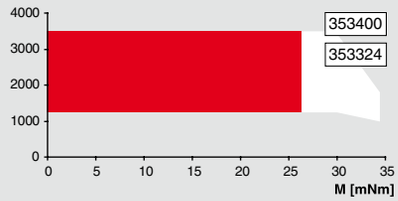

Comments

Continuous operation
The drive can be operated with a speed controller and, taking account of the given thermal resistance (fig. 17 and 18) at an ambient temperature of 25°C, does not exceed the maximum permissible operating temperatures.

Overload range
The drive reaches these operating points. Speed may vary from the set value. The overload protection shuts down the drive in the event of sustained overload.

n [rpm]

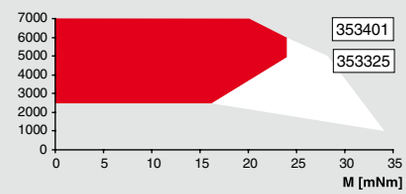

maxon Modular System

Overview on page 20–25

Planetary Gearhead
∅32 mm
0.75 - 6 Nm
Page 274/277

Spur Gearhead
∅38 mm
0.1 - 0.6 Nm
Page 282

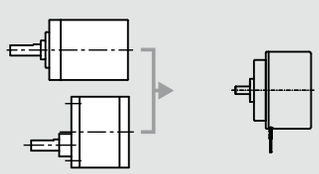

EC-i 40 ∅40 mm, brushless, 50 Watt

NEW

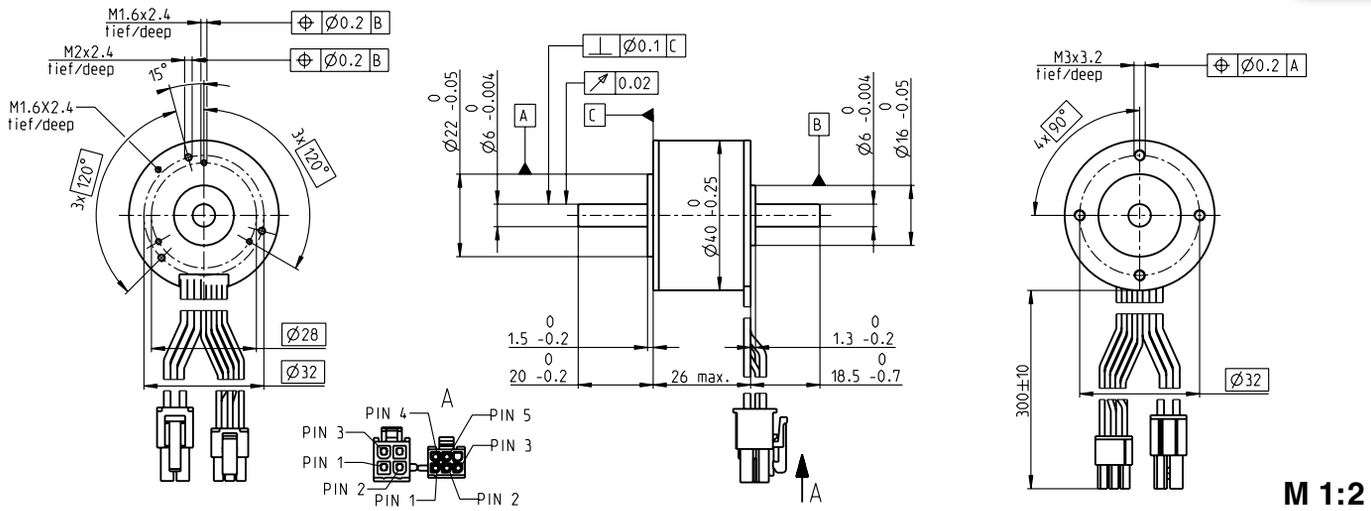

Stock program
Standard program
Special program (on request)

Part Numbers

	with Hall sensors	449463	449464
Motor Data (provisional)			
Values at nominal voltage			
1 Nominal voltage	V	12	24
2 No load speed	rpm	12400	13200
3 No load current	mA	522	285
4 Nominal speed	rpm	9560	10200
5 Nominal torque (max. continuous torque)	mNm	43.2	52.7
6 Nominal current (max. continuous current)	A	4.53	2.79
7 Stall torque	mNm	432	773
8 Starting current	A	48.3	45.8
9 Max. efficiency	%	81	85
Characteristics			
10 Terminal resistance phase to phase	Ω	0.248	0.524
11 Terminal inductance phase to phase	mH	0.109	0.39
12 Torque constant	mNm/A	8.95	16.9
13 Speed constant	rpm/V	1070	565
14 Speed/torque gradient	rpm/mNm	29.6	17.5
15 Mechanical time constant	ms	3.26	1.93
16 Rotor inertia	gcm²	10.5	10.5

Specifications

Thermal data		
17 Thermal resistance housing-ambient		9.66 K/W
18 Thermal resistance winding-housing		2.57 K/W
19 Thermal time constant winding		11.9 s
20 Thermal time constant motor		821 s
21 Ambient temperature		-40…+100°C
22 Max. permissible winding temperature		+155°C
Mechanical data (preloaded ball bearings)		
23 Max. permissible speed		15000 rpm
24 Axial play at axial load	< 7.0 N	0 mm
	> 7.0 N	0.15 mm
25 Radial play		preloaded
26 Max. axial load (dynamic)		5 N
27 Max. force for press fits (static)		87 N
(static, shaft supported)		2000 N
28 Max. radial loading, 5 mm from flange		15 N
Other specifications		
29 Number of pole pairs		7
30 Number of phases		3
31 Weight of motor		170 g

Values listed in the table are nominal.

Connection (Cable AWG 20)

red	Motor winding 1	Pin 1
black	Motor winding 2	Pin 2
white	Motor winding 3	Pin 3
	N.C.	Pin 4

Connector	**Article number**
Molex	39-01-2040

Connection (Cable AWG 26)

yellow	Hall sensor 1	Pin 1
brown	Hall sensor 2	Pin 2
grey	Hall sensor 3	Pin 3
blue	GND	Pin 4
green	V_{Hall} 4.5…24 VDC	Pin 5
	N.C.	Pin 6

Connector	**Article number**
Molex	430-25-0600

Operating Range

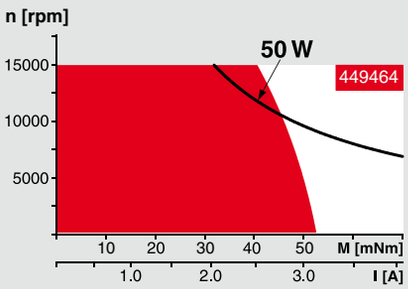

Comments

Continuous operation
In observation of above listed thermal resistance (lines 17 and 18) the maximum permissible winding temperature will be reached during continuous operation at 25°C ambient.
= Thermal limit.

Short term operation
The motor may be briefly overloaded (recurring).

Assigned power rating

maxon Modular System

Overview on page 20–25

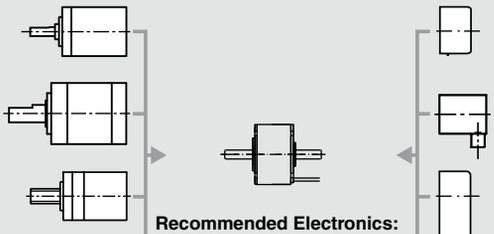

Planetary Gearhead
∅32 mm
1.0 - 6.0 Nm
Page 277

Planetary Gearhead
∅42 mm
3 - 15 Nm
Page 284

Spindle Drive
∅32 mm
Page 301–303

Encoder 16 EASY
128 - 1024 CPT,
3 channels
Page 311

Encoder 2RMHF
3000 - 5000 CTP,
3 channels
Page 323

Encoder HEDL 5540
500 CPT,
3 channels
Page 330

Recommended Electronics:

ESCON 36/3 EC	Page 342
ESCON Mod. 50/4 EC-S	343
ESCON Module 50/5	343
ESCON 50/5	344
DEC Module 50/5	346
EPOS2 Module 36/2	350
EPOS2 24/5	351
EPOS2 P 24/5	354
EPOS3 70/10 EtherCAT	357
MAXPOS 50/5	360
Notes	**24**

EC-i 40 ∅40 mm, brushless, 70 Watt

NEW

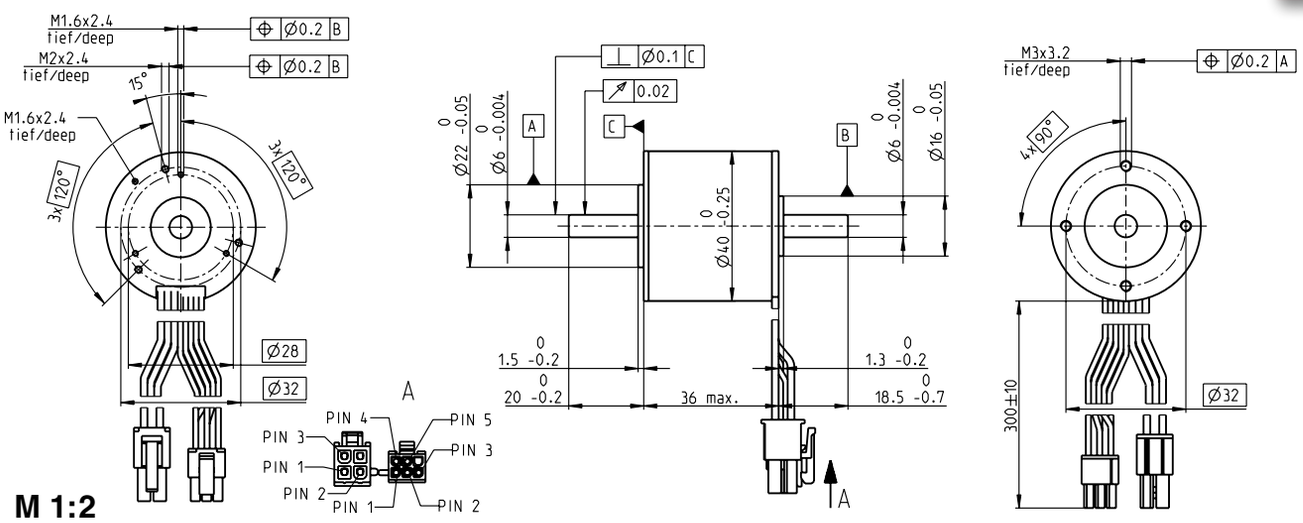

M 1:2

Stock program
Standard program
Special program (on request)

Part Numbers

	with Hall sensors	449469	449470

Motor Data (provisional)

	Values at nominal voltage			
1	Nominal voltage	V	18	36
2	No load speed	rpm	10100	10700
3	No load current	mA	354	192
4	Nominal speed	rpm	8180	8730
5	Nominal torque (max. continuous torque)	mNm	68.4	82.9
6	Nominal current (max. continuous current)	A	3.92	2.42
7	Stall torque	mNm	820	1410
8	Starting current	A	49.1	44.6
9	Max. efficiency	%	84	87
	Characteristics			
10	Terminal resistance phase to phase	Ω	0.367	0.807
11	Terminal inductance phase to phase	mH	0.18	0.644
12	Torque constant	mNm/A	16.7	31.5
13	Speed constant	rpm/V	572	303
14	Speed/torque gradient	rpm/mNm	12.6	7.75
15	Mechanical time constant	ms	3.18	1.96
16	Rotor inertia	gcm^2	24.2	24.2

Specifications

	Thermal data	
17	Thermal resistance housing-ambient	7.8 K/W
18	Thermal resistance winding-housing	2.6 K/W
19	Thermal time constant winding	19.3 s
20	Thermal time constant motor	936 s
21	Ambient temperature	-40…+100°C
22	Max. permissible winding temperature	+155°C
	Mechanical data (preloaded ball bearings)	
23	Max. permissible speed	15000 rpm
24	Axial play at axial load < 7.0 N	0 mm
	> 7.0 N	0.15 mm
25	Radial play	preloaded
26	Max. axial load (dynamic)	5 N
27	Max. force for press fits (static)	87 N
	(static, shaft supported)	2000 N
28	Max. radial loading, 5 mm from flange	15 N
	Other specifications	
29	Number of pole pairs	7
30	Number of phases	3
31	Weight of motor	240 g

Values listed in the table are nominal.

Connection (Cable AWG 20)

red	Motor winding 1	Pin 1
black	Motor winding 2	Pin 2
white	Motor winding 3	Pin 3
	N.C.	Pin 4

Connector	**Article number**
Molex	39-01-2040

Connection (Cable AWG 26)

yellow	Hall sensor 1	Pin 1
brown	Hall sensor 2	Pin 2
grey	Hall sensor 3	Pin 3
blue	GND	Pin 4
green	V_{Hall} 4.5…24 VDC	Pin 5
	N.C.	Pin 6

Connector	**Article number**
Molex	430-25-0600

Operating Range

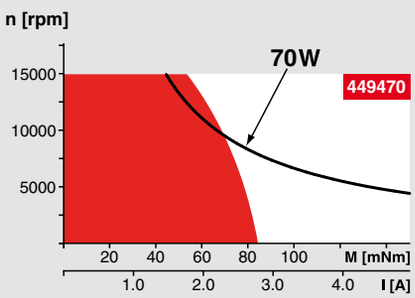

Comments

Continuous operation
In observation of above listed thermal resistance (lines 17 and 18) the maximum permissible winding temperature will be reached during continuous operation at 25°C ambient.
= Thermal limit.

Short term operation
The motor may be briefly overloaded (recurring).

Assigned power rating

maxon Modular System

Overview on page 20–25

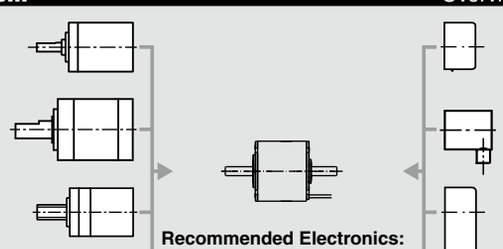

Planetary Gearhead
∅32 mm
1.0 - 6.0 Nm
Page 277

Planetary Gearhead
∅42 mm
3 - 15 Nm
Page 284

Spindle Drive
∅32 mm
Page 301–303

Encoder 16 EASY
128 - 1024 CPT,
3 channels
Page 311

Encoder 2RMHF
3000 - 5000 CTP,
3 channels
Page 323

Encoder HEDL 5540
500 CPT,
3 channels
Page 330

Recommended Electronics:

ESCON 36/3 EC	Page 342
ESCON Mod. 50/4 EC-S	343
ESCON Module 50/5	343
ESCON 50/5	344
DEC Module 50/5	346
EPOS2 Module 36/2	350
EPOS2 24/5, 50/5	351
EPOS2 P 24/5	354
EPOS3 70/10 EtherCAT	357
MAXPOS 50/5	360
Notes	**24**

EC 45 flat ∅42.8 mm, brushless, 12 Watt

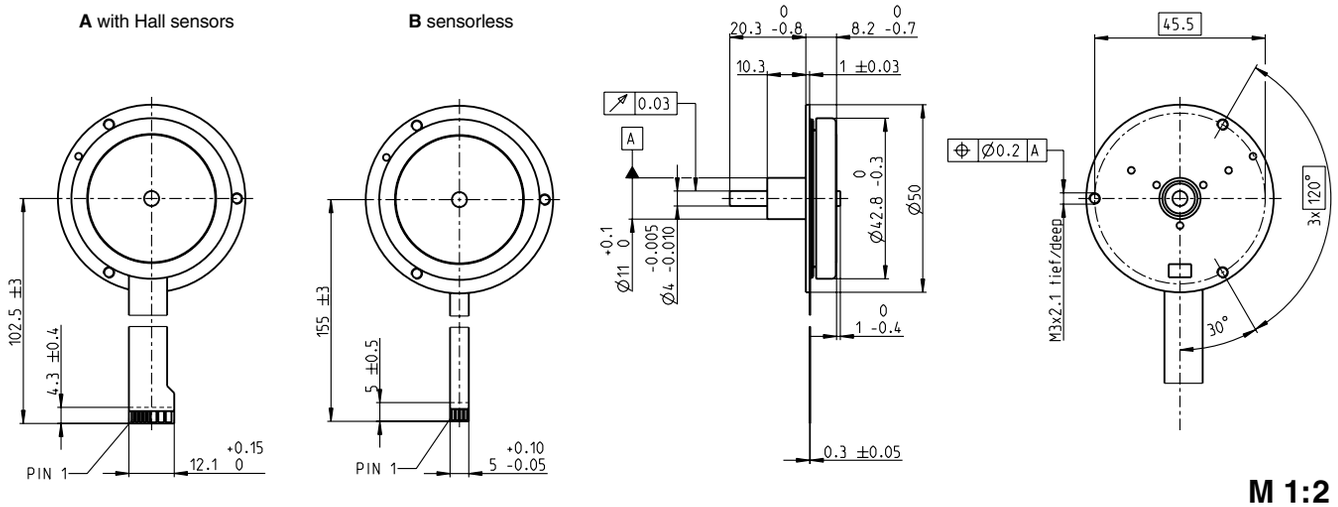

M 1:2

Stock program
Standard program
Special program (on request)

Part Numbers

A with Hall sensors	200188		339275		339276			
B sensorless		200141		339277		339278		

Motor Data

	Values at nominal voltage								
1	Nominal voltage	V	9	9	12	12	24	24	
2	No load speed	rpm	7990	7970	8140	8130	7300	7290	
3	No load current	mA	145	145	113	113	46.9	46.9	
4	Nominal speed	rpm	4830	4340	4840	4790	4380	4370	
5	Nominal torque (max. continuous torque)	mNm	22.8	23.9	19.1	18.3	25.8	25.4	
6	Nominal current (max. continuous current)	A	1.96	2.07	1.31	1.27	0.739	0.73	
7	Stall torque	mNm	89.1	74.8	66.2	61.2	106	103	
8	Starting current	A	8.57	7.2	4.9	4.53	3.46	3.36	
9	Max. efficiency	%	76	74	72	72	78	78	
	Characteristics								
10	Terminal resistance phase to phase	Ω	1.05	1.25	2.45	2.65	6.93	7.13	
11	Terminal inductance phase to phase	mH	0.32	0.32	0.541	0.541	2.75	2.75	
12	Torque constant	mNm/A	10.4	10.4	13.5	13.5	30.5	30.5	
13	Speed constant	rpm/V	918	918	706	706	313	313	
14	Speed/torque gradient	rpm/mNm	92.7	110	128	138	71.1	73.2	
15	Mechanical time constant	ms	50.8	60.5	70.1	75.8	39	40.1	
16	Rotor inertia	gcm²	52.3	52.3	52.3	52.3	52.3	52.3	

Specifications

	Thermal data	
17	Thermal resistance housing-ambient	4.89 K/W
18	Thermal resistance winding-housing	4.93 K/W
19	Thermal time constant winding	8.31 s
20	Thermal time constant motor	148 s
21	Ambient temperature	-40…+100°C
22	Max. permissible winding temperature	+125°C
	Mechanical data (preloaded ball bearings)	
23	Max. permissible speed	10000 rpm
24	Axial play at axial load < 5.0 N	0 mm
	> 5.0 N	typ. 0.6 mm
25	Radial play	preloaded
26	Max. axial load (dynamic)	4.8 N
27	Max. force for press fits (static)	45 N
	(static, shaft supported)	1000 N
28	Max. radial loading, 8 mm from flange	5.5 N
	Other specifications	
29	Number of pole pairs	8
30	Number of phases	3
31	Weight of motor	57 g

Values listed in the table are nominal.

Connection	**with Hall sensors**	**sensorless**
Pin 1	V_{Hall} 4.5…18 VDC	Motor winding 1
Pin 2	Hall sensor 3*	Motor winding 2
Pin 3	Hall sensor 1*	Motor winding 3
Pin 4	Hall sensor 2*	⅄ neutral point
Pin 5	GND	
Pin 6	Motor winding 3	
Pin 7	Motor winding 2	
Pin 8	Motor winding 1	

*Internal pull-up (7…13 kΩ) on pin 1
Wiring diagram for Hall sensors see p. 35

Adapter	**Part number**	**Part number**
see p. 362	220300	220310
Connector	**Part number**	**Part number**
Tyco	1-84953-1	84953-4
Molex	52207-1133	52207-0433
Molex	52089-1119	52089-0419

Pin for design with Hall sensors:
FPC, 11-pol, Pitch 1.0 mm, top contact style

Operating Range

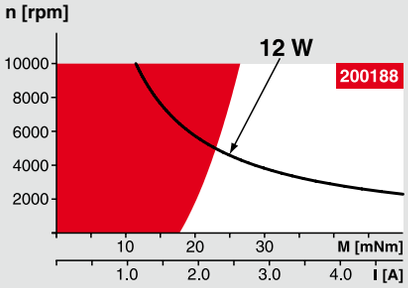

Comments

Continuous operation
In observation of above listed thermal resistance (lines 17 and 18) the maximum permissible winding temperature will be reached during continuous operation at 25°C ambient.
= Thermal limit.

Short term operation
The motor may be briefly overloaded (recurring).

Assigned power rating

maxon Modular System

Overview on page 20–25

Recommended Electronics:

ESCON 36/3 EC	Page 342
ESCON Mod. 50/4 EC-S	343
ESCON Module 50/5	343
ESCON 50/5	344
DEC Module 24/2	346
DEC Module 50/5	346
EPOS2 24/2	350
EPOS2 Module 36/2	350
EPOS3 70/10 EtherCAT	357
MAXPOS 50/5	360
Notes	**24**

EC 45 flat ∅42.9 mm, brushless, 30 Watt

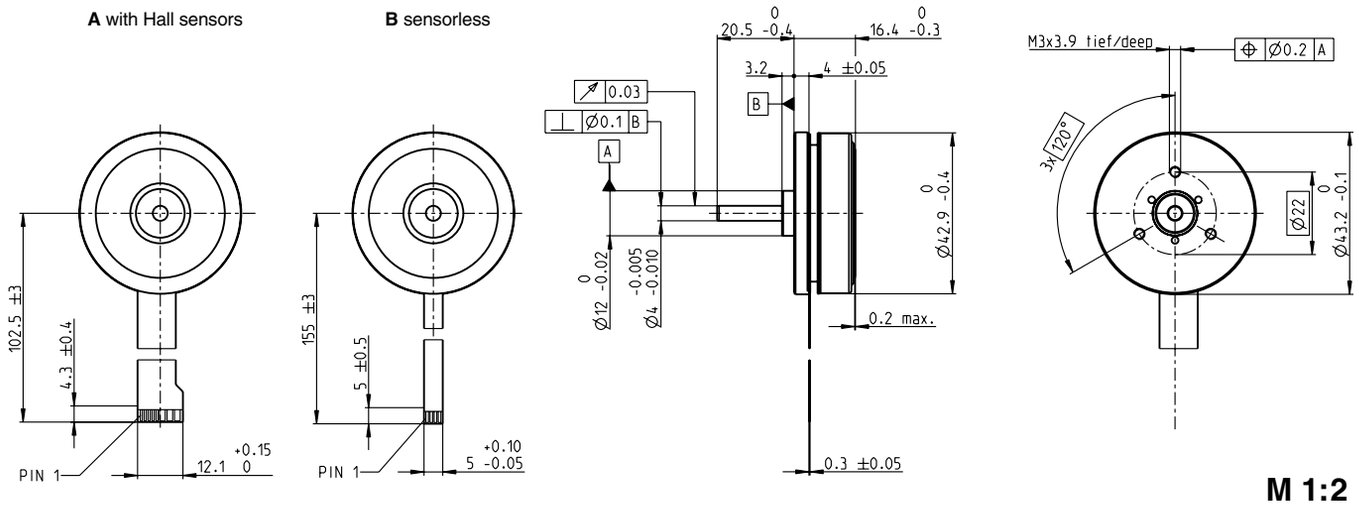

M 1:2

Stock program
Standard program
Special program (on request)

Part Numbers

A with Hall sensors	200142		339281		339282	
B sensorless		200189		339283		339284

Motor Data

	Values at nominal voltage								
1	Nominal voltage	V	12	12	24	24	36	36	
2	No load speed	rpm	4380	4370	4380	4380	4760	4760	
3	No load current	mA	144	144	73	73	55.4	55.3	
4	Nominal speed	rpm	2940	2800	2940	2900	3290	3270	
5	Nominal torque (max. continuous torque)	mNm	55.5	55.2	55.3	55.2	66.6	66.6	
6	Nominal current (max. continuous current)	A	2.03	2.02	1.01	1.01	0.849	0.849	
7	Stall torque	mNm	55.5	219	253	243	380	369	
8	Starting current	A	10	8.58	4.97	4.77	5.38	5.22	
9	Max. efficiency	%	78	76	78	77	81	81	
	Characteristics								
10	Terminal resistance phase to phase	Ω	1.2	1.4	4.83	5.03	6.69	6.89	
11	Terminal inductance phase to phase	mH	0.56	0.56	2.24	2.24	4.29	4.29	
12	Torque constant	mNm/A	25.5	25.5	51	51	70.6	70.6	
13	Speed constant	rpm/V	374	374	187	187	135	135	
14	Speed/torque gradient	rpm/mNm	17.6	20.5	17.7	18.5	12.8	13.2	
15	Mechanical time constant	ms	17.1	19.9	17.2	17.9	12.4	12.8	
16	Rotor inertia	gcm²	92.5	92.5	92.5	92.5	92.5	92.5	

Specifications

	Thermal data	
17	Thermal resistance housing-ambient	5.41 K/W
18	Thermal resistance winding-housing	3.97 K/W
19	Thermal time constant winding	11.5 s
20	Thermal time constant motor	251 s
21	Ambient temperature	-40…+100°C
22	Max. permissible winding temperature	+125°C
	Mechanical data (preloaded ball bearings)	
23	Max. permissible speed	10000 rpm
24	Axial play at axial load < 5.0 N	0 mm
	> 5.0 N	typ. 0.14 mm
25	Radial play	preloaded
26	Max. axial load (dynamic)	4.8 N
27	Max. force for press fits (static)	53 N
	(static, shaft supported)	1000 N
28	Max. radial loading, 8 mm from flange	21 N
	Other specifications	
29	Number of pole pairs	8
30	Number of phases	3
31	Weight of motor	75 g

Values listed in the table are nominal.

Connection	**with Hall sensors**	**sensorless**
Pin 1	V_{Hall} 4.5…18 VDC	Motor winding 1
Pin 2	Hall sensor 3*	Motor winding 2
Pin 3	Hall sensor 1*	Motor winding 3
Pin 4	Hall sensor 2*	⊥ neutral point
Pin 5	GND	
Pin 6	Motor winding 3	
Pin 7	Motor winding 2	
Pin 8	Motor winding 1	

*Internal pull-up (7…13 kΩ) on pin 1
Wiring diagram for Hall sensors see p. 35

Adapter	**Part number**	**Part number**
see p. 362	220300	220310
Connector	**Part number**	**Part number**
Tyco	1-84953-1	84953-4
Molex	52207-1133	52207-0433
Molex	52089-1119	52089-0419

Pin for design with Hall sensors:
FPC, 11-pol, Pitch 1.0 mm, top contact style

Operating Range

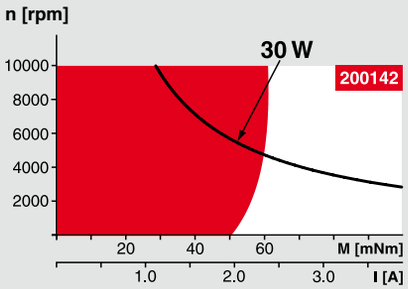

Comments

Continuous operation
In observation of above listed thermal resistance (lines 17 and 18) the maximum permissible winding temperature will be reached during continuous operation at 25°C ambient.
= Thermal limit.

Short term operation
The motor may be briefly overloaded (recurring).

Assigned power rating

maxon Modular System

Overview on page 20–25

Planetary Gearhead
∅42 mm
3 - 15 Nm
Page 284

Spur Gearhead
∅45 mm
0.5 - 2.0 Nm
Page 286

Encoder MILE
256 - 2048 CPT,
2 channels
Page 308

Recommended Electronics:

ESCON 36/3 EC	Page 342
ESCON Mod. 50/4 EC-S	343
ESCON Module 50/5	343
ESCON 50/5	344
DEC Module 24/2	346
DEC Module 50/5	346
EPOS2 24/2, Module 36/2	350
EPOS2 24/5	351
EPOS2 P 24/5	354
EPOS3 70/10 EtherCAT	357
MAXPOS 50/5	360
Notes	**24**

Option
With Cable and Connector
(Motor length +1.3 mm,
Ambient temperature -20…+100°C)

EC 45 flat ∅42.8 mm, brushless, 50 Watt

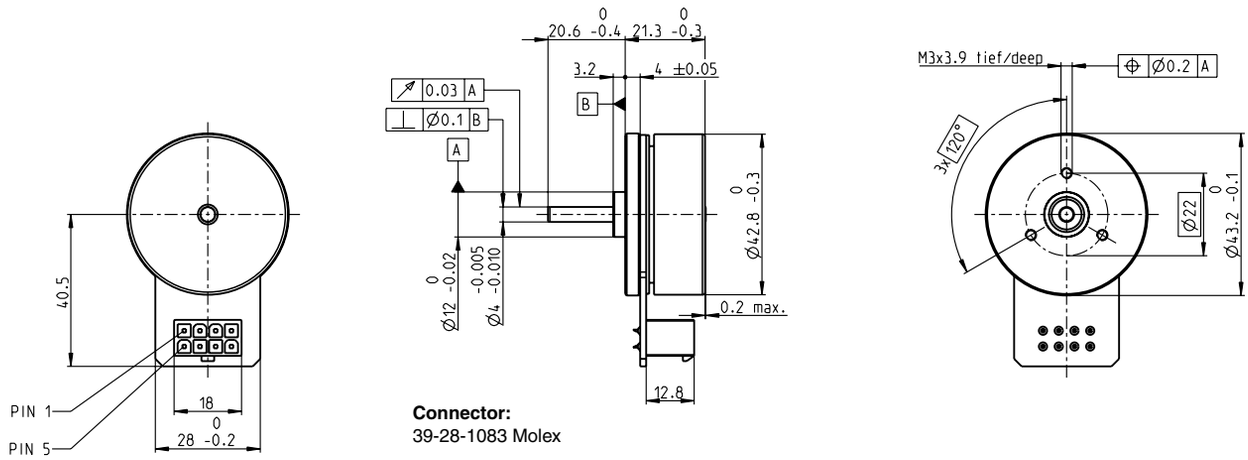

Connector:
39-28-1083 Molex

M 1:2

Stock program
Standard program
Special program (on request)

Part Numbers

with Hall sensors	339285	251601	339286	339287

Motor Data

	Values at nominal voltage					
1	Nominal voltage	V	18	24	24	36
2	No load speed	rpm	6720	6710	4730	3360
3	No load current	mA	247	185	106	42.3
4	Nominal speed	rpm	5190	5240	3480	2360
5	Nominal torque (max. continuous torque)	mNm	97.1	83.4	69.6	90.5
6	Nominal current (max. continuous current)	A	3.52	2.33	1.41	0.828
7	Stall torque	mNm	975	780	402	484
8	Starting current	A	38.8	23.3	8.47	4.81
9	Max. efficiency	%	85	83	79	82
	Characteristics					
10	Terminal resistance phase to phase	Ω	0.464	1.03	2.83	7.48
11	Terminal inductance phase to phase	mH	0.322	0.572	1.15	5.15
12	Torque constant	mNm/A	25.1	33.5	47.5	101
13	Speed constant	rpm/V	380	285	201	95
14	Speed/torque gradient	rpm/mNm	7.02	8.77	12	7.07
15	Mechanical time constant	ms	9.92	12.4	17	10
16	Rotor inertia	gcm²	135	135	135	135

Specifications

Thermal data

17	Thermal resistance housing-ambient	4.53 K/W
18	Thermal resistance winding-housing	4.75 K/W
19	Thermal time constant winding	17.7 s
20	Thermal time constant motor	227 s
21	Ambient temperature	-40…+100°C
22	Max. permissible winding temperature	+125°C

Mechanical data (preloaded ball bearings)

23	Max. permissible speed	10000 rpm
24	Axial play at axial load < 4.0 N	0 mm
	> 4.0 N	0.14 mm
25	Radial play	preloaded
26	Max. axial load (dynamic)	3.8 N
27	Max. force for press fits (static)	53 N
	(static, shaft supported)	1000 N
28	Max. radial loading, 8 mm from flange	21 N

Other specifications

29	Number of pole pairs	8
30	Number of phases	3
31	Weight of motor	110 g

Values listed in the table are nominal.

Connection

Pin 1	Hall sensor 1*
Pin 2	Hall sensor 2*
Pin 3	V_{Hall} 4.5…18 VDC
Pin 4	Motor winding 3
Pin 5	Hall sensor 3*
Pin 6	GND
Pin 7	Motor winding 1
Pin 8	Motor winding 2

*Internal pull-up (7…13 kΩ) on pin 3
Wiring diagram for Hall sensors see p. 35

Cable

Connection cable Universal, L = 500 mm	**339380**
Connection cable to EPOS, L = 500 mm	**354045**

Operating Range

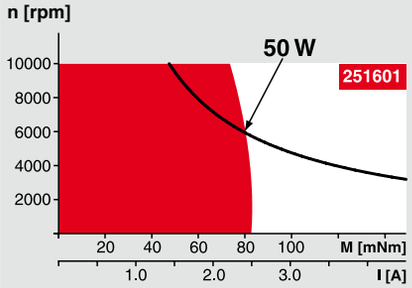

Comments

Continuous operation
In observation of above listed thermal resistance (lines 17 and 18) the maximum permissible winding temperature will be reached during continuous operation at 25°C ambient.
= Thermal limit.

Short term operation
The motor may be briefly overloaded (recurring).

Assigned power rating

maxon Modular System

Overview on page 20–25

Planetary Gearhead
∅42 mm
3 - 15 Nm
Page 284

Spur Gearhead
∅45 mm
0.5 - 2.0 Nm
Page 286

Encoder MILE
256 - 2048 CPT,
2 channels
Page 308

Recommended Electronics:

ESCON 36/3 EC	Page 342
ESCON Mod. 50/4 EC-S	343
ESCON Module 50/5	343
ESCON 50/5	344
DEC Module 50/5	346
EPOS2 24/2	350
EPOS2 Module 36/2	350
EPOS2 24/5	351
EPOS2 P 24/5	354
EPOS3 70/10 EtherCAT	357
MAXPOS 50/5	360
Notes	**24**

Option
With Cable and Connector
(Ambient temperature -20…+100°C)

EC 45 flat ∅42.8 mm, brushless, 70 Watt

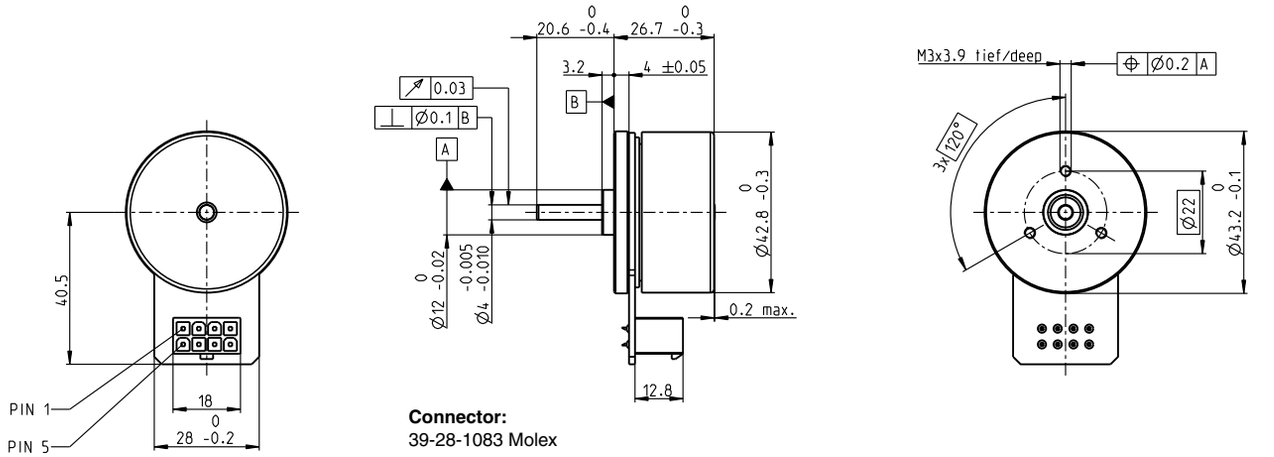

Connector:
39-28-1083 Molex

M 1:2

Stock program
Standard program
Special program (on request)

Part Numbers

with Hall sensors	397172	402685	402686	402687
Motor Data (provisional)				
Values at nominal voltage				
1 Nominal voltage V	24	30	36	48
2 No load speed rpm	6110	6230	6330	3440
3 No load current mA	234	194	166	48.1
4 Nominal speed rpm	4860	4990	5080	2540
5 Nominal torque (max. continuous torque) mNm	128	112	108	134
6 Nominal current (max. continuous current) A	3.21	2.36	1.93	0.936
7 Stall torque mNm	1460	1170	1100	915
8 Starting current A	39.5	25.8	20.7	6.97
9 Max. efficiency %	85	84	83	84
Characteristics				
10 Terminal resistance phase to phase Ω	0.608	1.16	1.74	6.89
11 Terminal inductance phase to phase mH	0.463	0.691	0.966	5.85
12 Torque constant mNm / A	36.9	45.1	53.3	131
13 Speed constant rpm / V	259	212	179	72.7
14 Speed / torque gradient rpm / mNm	4.26	5.44	5.85	3.82
15 Mechanical time constant ms	8.07	10.3	11.1	7.24
16 Rotor inertia gcm^2	181	181	181	181

Specifications

Thermal data

17	Thermal resistance housing-ambient	3.56 K/W
18	Thermal resistance winding-housing	4.1 K/W
19	Thermal time constant winding	29.6 s
20	Thermal time constant motor	178 s
21	Ambient temperature	-40 ... +100°C
22	Max. permissible winding temperature	+125°C

Mechanical data (preloaded ball bearings)

23	Max. permissible speed	10000 rpm
24	Axial play at axial load < 4.0 N	0 mm
	> 4.0 N	0.14 mm
25	Radial play	preloaded
26	Max. axial load (dynamic)	3.8 N
27	Max. force for press fits (static)	50 N
	(static, shaft supported)	1000 N
28	Max. radial loading, 8 mm from flange	21 N

Other specifications

29	Number of pole pairs	8
30	Number of phases	3
31	Weight of motor	141 g

Values listed in the table are nominal.

Connection

Pin 1	Hall sensor 1*
Pin 2	Hall sensor 2*
Pin 3	V_{Hall} 4.5 ... 18 VDC
Pin 4	Motor winding 3
Pin 5	Hall sensor 3*
Pin 6	GND
Pin 7	Motor winding 1
Pin 8	Motor winding 2

*Internal pull-up (7 … 13 kΩ) on pin 3
Wiring diagram for Hall sensors see p. 35

Cable

Connection cable Universal, L = 500 mm	**339380**
Connection cable to EPOS, L = 500 mm	**354045**

Operating Range

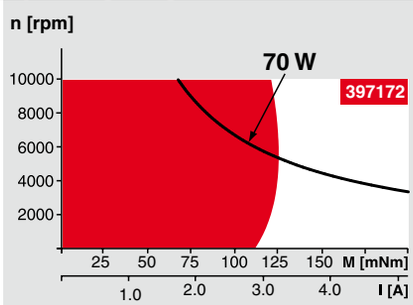

Comments

Continuous operation
In observation of above listed thermal resistance (lines 17 and 18) the maximum permissible winding temperature will be reached during continuous operation at 25°C ambient.
= Thermal limit.

Short term operation
The motor may be briefly overloaded (recurring).

Assigned power rating

maxon Modular System

Overview on page 20–25

Planetary Gearhead
∅42 mm
3 - 15 Nm
Page 284

Spur Gearhead
∅45 mm
0.5 - 2.0 Nm
Page 286

Encoder MILE
256 - 2048 CPT,
2 channels
Page 308

Recommended Electronics:

ESCON 36/3 EC	Page 342
ESCON Mod. 50/4 EC-S	343
ESCON Module 50/5	343
ESCON 50/5	344
DEC Module 50/5	346
EPOS2 Module 36/2	350
EPOS2 24/5	351
EPOS2 P 24/5	354
EPOS3 70/10 EtherCAT	357
MAXPOS 50/5	360
Notes	**24**

Option
With Cable and Connector
(Ambient temperature -20 ... +100°C)

EC 45 flat brushless, 30 Watt, with integrated electronics

1-Q-speed controller

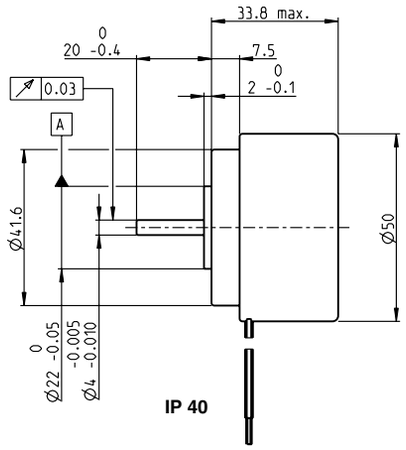

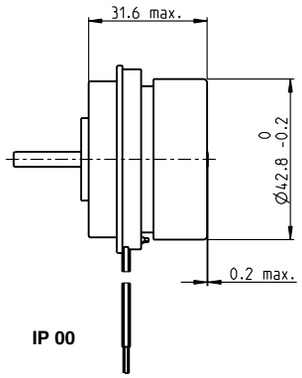

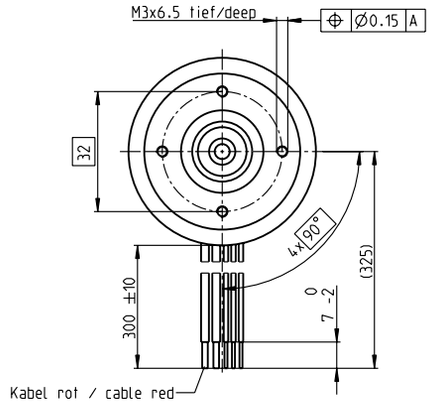

M 1:2

Stock program
Standard program
Special program (on request)

Part Numbers								
					5 wire version			
	2 wire version				Enable		Direction	
IP 40 (with cover)	353518		353519		350909		370425	
IP 00 (without cover)		353516		353517		352886		370424

Motor Data (provisional)									
	Values at nominal voltage								
1	Nominal voltage	V	24	24	24	24	24	24	24	24
2	No load speed	rpm	3000	3000	6000	6000	6000	6000	6000	6000
3	No load current	mA	79.5	79.5	210	210	210	210	210	210
4	Nominal speed	rpm	3000	3000	6000	6000	6000	6000	6000	6000
5	Nominal torque (max. continuous torque)	mNm	72.8	94.7	59.4	89.6	59.4	89.6	59.4	89.6
6	Nominal current (max. continuous current)	A	1.33	1.78	2.06	3.1	2.06	3.1	2.06	3.1
33	Max. torque	mNm	106	106	104	104	104	104	104	104
34	Max. current	A	2.02	2.02	3.62	3.62	3.62	3.62	3.62	3.62
9	Max. efficiency	%	73	73	76	76	76	76	76	76
	Characteristics									
35	Type of control		Speed	Speed	Speed	Speed	Speed	Speed	Speed	Speed
36	Supply voltage $+V_{CC}$	V	10…28	10…28	10…28	10…28	10…28	10…28	10…28	10…28
37	Speed set value input	V	$= V_{CC}$	$= V_{CC}$	$= V_{CC}$	$= V_{CC}$	0.33…10.8	0.33…10.8	0.33…10.8	0.33…10.8
38	Scale speed set value input	rpm/V	125	125	250	250	600	600	600	600
39	Speed range	rpm	1250…3500	1250…3500	2500…7000	2500…7000	200…6480	200…6480	200…6480	200…6480
40	Max. acceleration	rpm/s	3000	3000	6000	6000	6000	6000	6000	6000

Specifications

Thermal data

17	Thermal resistance housing-ambient	5.6 (3.12) K/W
18	Thermal resistance winding-housing	7.7 (4.5) K/W
19	Thermal time constant winding	37.6 (22) s
20	Thermal time constant motor	633 (353) s
21	Ambient temperature	-40…+85°C
22	Max. permissible winding temperature	+125°C
41	Max. temperature of electronics	+105°C

Mechanical data (preloaded ball bearings)

16	Rotor inertia	135 gcm²
24	Axial play at axial load < 7.0 N	0 mm
	> 7.0 N	0.14 mm
25	Radial play	preloaded
26	Max. axial load (dynamic)	6.8 N
27	Max. force for press fits (static)	95 N
	(static, shaft supported)	1000 N
28	Max. radial loading, 7.5 mm from flange	51 N

Other specifications

31	Weight of motor	226 g
32	Direction of rotation	Clockwise (CW)

Values listed in the table are nominal.

Protective functions
Overload protection, blockage protection, inverse-polarity protection, thermal overload protection, low/high voltage cut-off

Connection 2 wire version (Cable AWG 18/24)

red	$+V_{CC}$ 10…28 VDC
black	GND

Connection 5 wire version (Cable AWG 18/24)

red	$+V_{CC}$ 10…28 VDC
black	GND
white	Speed set value input
green	Monitor n (6 pulses per revolution)
grey	Disable (Type Enable) or sense of direction (Type Direction)

Operating Range

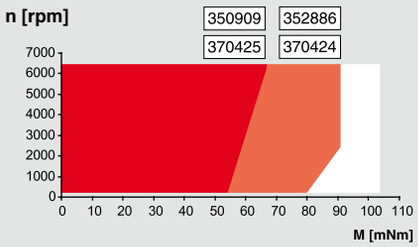

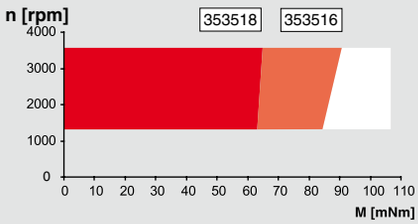

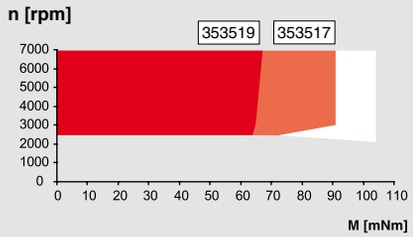

Comments

Continuous operation
The drive can be operated with a speed controller and, taking account of the given thermal resistance (fig. 17 and 18) at an ambient temperature of 25°C, does not exceed the maximum permissible operating temperatures.

Overload range
The drive reaches these operating points. Speed may vary from the set value. The overload protection shuts down the drive in the event of sustained overload.

maxon Modular System

Overview on page 20–25

Planetary Gearhead
∅42 mm
3 - 15 Nm
Page 284

Spur Gearhead
∅45 mm
0.5 - 2.0 Nm
Page 286

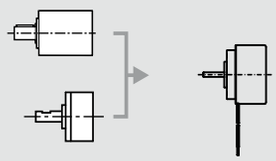

EC 45 flat brushless, 50 Watt, with integrated electronics

1-Q-speed controller

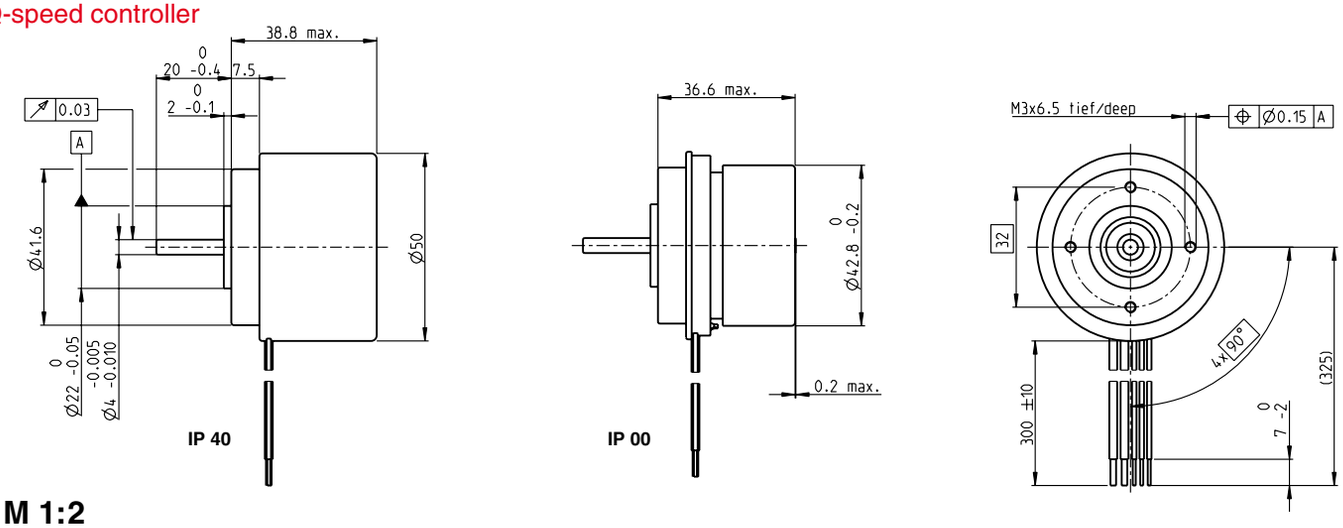

M 1:2

Stock program
Standard program
Special program (on request)

Part Numbers

	2 wire version		5 wire version: Enable		5 wire version: Direction	
IP 40 (with cover)	353526		350910		370427	
IP 00 (without cover)		353524		352887		370426

Motor Data (provisional)

	Values at nominal voltage							
1	Nominal voltage	V	24	24	24	24	24	24
2	No load speed	rpm	3000	3000	4500	4500	4500	4500
3	No load current	mA	114	114	192	192	192	192
4	Nominal speed	rpm	3000	3000	4500	4500	4500	4500
5	Nominal torque (max. continuous torque)	mNm	89.9	130	82.8	131	82.8	131
6	Nominal current (max. continuous current)	A	1.61	2.41	2.15	3.45	2.15	3.45
33	Max. torque	mNm	150	150	149	149	149	149
34	Max. current	A	2.83	2.83	3.86	3.86	3.86	3.86
9	Max. efficiency	%	74	74	76	76	76	76
	Characteristics							
35	Type of control		Speed	Speed	Speed	Speed	Speed	Speed
36	Supply voltage $+V_{CC}$	V	10…28	10…28	10…28	10…28	10…28	10…28
37	Speed set value input	V	= V_{CC}	= V_{CC}	0.33…10.8	0.33…10.8	0.33…10.8	0.33…10.8
38	Scale speed set value input	rpm/V	125	125	600	600	600	600
39	Speed range	rpm	1250…3500	1250…3500	200…6480	200…6480	200…6480	200…6480
40	Max. acceleration	rpm/s	3000	3000	6000	6000	6000	6000

Specifications

	Thermal data	
17	Thermal resistance housing-ambient	5.1 (2.5) K/W
18	Thermal resistance winding-housing	6.7 (3.3) K/W
19	Thermal time constant winding	45.1 (22.1) s
20	Thermal time constant motor	256 (124) s
21	Ambient temperature	-40…+85°C
22	Max. permissible winding temperature	+125°C
41	Max. temperature of electronics	+105°C
	Mechanical data (preloaded ball bearings)	
16	Rotor inertia	181 gcm²
24	Axial play at axial load < 7.0 N	0 mm
	> 7.0 N	0.14 mm
25	Radial play	preloaded
26	Max. axial load (dynamic)	6.8 N
27	Max. force for press fits (static)	95 N
	(static, shaft supported)	1000 N
28	Max. radial loading, 7.5 mm from flange	54 N
	Other specifications	
31	Weight of motor	260 g
32	Direction of rotation	Clockwise (CW)

Values listed in the table are nominal.

Protective functions
Overload protection, blockage protection, inverse-polarity protection, thermal overload protection, low/high voltage cut-off

Connection 2 wire version (Cable AWG 18/24)
red $+V_{CC}$ 10…28 VDC
black GND

Connection 5 wire version (Cable AWG 18/24)
red $+V_{CC}$ 10…28 VDC
black GND
white Speed set value input
green Monitor n (6 pulses per revolution)
grey Disable (Type Enable) or sense of direction (Type Direction)

Operating Range

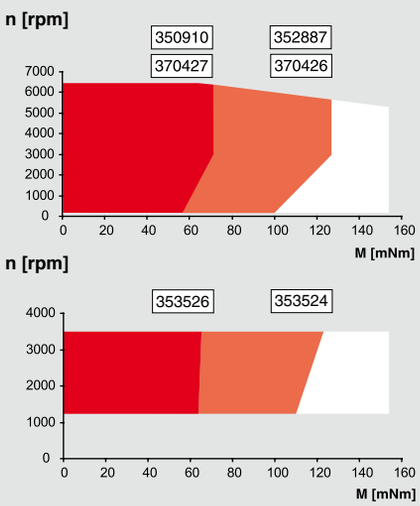

Comments

Continuous operation
The drive can be operated with a speed controller and, taking account of the given thermal resistance (fig. 17 and 18) at an ambient temperature of 25°C, does not exceed the maximum permissible operating temperatures.

Overload range
The drive reaches these operating points. Speed may vary from the set value. The overload protection shuts down the drive in the event of sustained overload.

maxon Modular System

Overview on page 20–25

Planetary Gearhead
∅42 mm
3 - 15 Nm
Page 284

Spur Gearhead
∅45 mm
0.5 - 2.0 Nm
Page 286

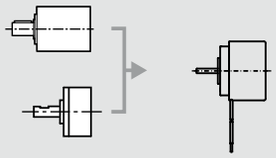

EC 60 flat ∅68 mm, brushless, 100 Watt

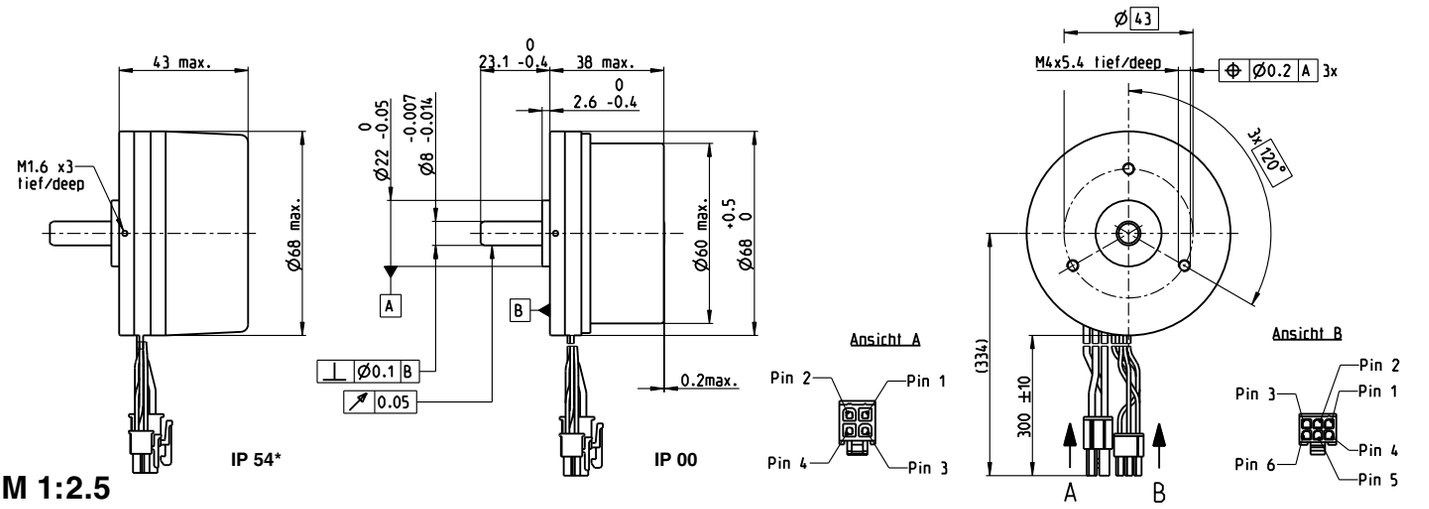

M 1:2.5

Stock program
Standard program
Special program (on request)

Part Numbers

IP 54* (with cover)	412819		408057		412821	
IP 00 (without cover)		412823		411678		412825

Motor Data

	Values at nominal voltage							
1	Nominal voltage	V	12	12	24	24	48	48
2	No load speed	rpm	3710	3710	4250	4250	3970	3970
3	No load current	mA	671	671	419	419	187	187
4	Nominal speed	rpm	3260	3170	3840	3740	3580	3490
5	Nominal torque (max. continuous torque)	mNm	231	279	227	289	257	319
6	Nominal current (max. continuous current)	A	7.81	9.25	4.43	5.47	2.3	2.78
7	Stall torque	mNm	2850	2850	4180	4180	5010	5010
8	Starting current	A	93.5	93.5	78.2	78.2	43.8	43.8
9	Max. efficiency	%	84	84	86	86	88	88
	Characteristics							
10	Terminal resistance phase to phase	Ω	0.128	0.128	0.307	0.307	1.1	1.1
11	Terminal inductance phase to phase	mH	0.0615	0.0615	0.188	0.188	0.864	0.864
12	Torque constant	mNm/A	30.5	30.5	53.4	53.4	114	114
13	Speed constant	rpm/V	313	313	179	179	83.4	83.4
14	Speed/torque gradient	rpm/mNm	1.32	1.32	1.03	1.03	0.798	0.798
15	Mechanical time constant	ms	16.7	16.7	13	13	10.1	10.1
16	Rotor inertia	gcm^2	1210	1210	1210	1210	1210	1210

Specifications

	Thermal data		
17	Thermal resistance housing-ambient		4.34 (2.5) K/W
18	Thermal resistance winding-housing		3.5 K/W
19	Thermal time constant winding		40 s
20	Thermal time constant motor		155 (86.9) s
21	Ambient temperature		-40…+100°C
22	Max. permissible winding temperature		+125°C
	Mechanical data (preloaded ball bearings)		
23	Max. permissible speed		6000 rpm
24	Axial play at axial load	< 12.0 N	0 mm
		> 12.0 N	0.14 mm
25	Radial play		preloaded
26	Max. axial load (dynamic)		12 N
27	Max. force for press fits (static)		170 N
	(static, shaft supported)		8000 N
28	Max. radial loading, 7.5 mm from flange		100 N
	Other specifications		
29	Number of pole pairs		7
30	Number of phases		3
31	Weight of motor		470 g

Values listed in the table are nominal.

Connection motor (Cable AWG 18)

red	Motor winding 1	Pin 1
black	Motor winding 2	Pin 2
white	Motor winding 3	Pin 3
	N.C.	Pin 4

Connector	**Part number**
Molex	39-01-2040

Connection sensors (Cable AWG 28)

grey	Hall sensor 1	Pin 1
grey	Hall sensor 2	Pin 2
grey	Hall sensor 3	Pin 3
grey	GND	Pin 4
blue	V_{Hall} 4.5…18 VDC	Pin 5
	N.C.	Pin 6

Connector	**Part number**
Molex	430-25-0600

Wiring diagram for Hall sensors see p. 35

* Protection class only when installed with flange-side seal.

Operating Range

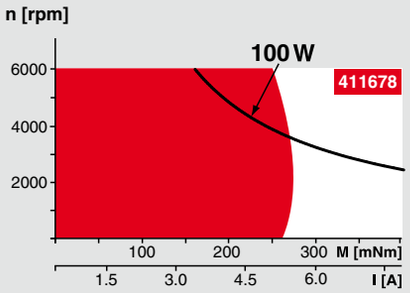

Comments

Continuous operation
In observation of above listed thermal resistance (lines 17 and 18) the maximum permissible winding temperature will be reached during continuous operation at 25°C ambient.
= Thermal limit.

Short term operation
The motor may be briefly overloaded (recurring).

Assigned power rating

maxon Modular System

Overview on page 20–25

Planetary Gearhead
∅52 mm
4 - 30 Nm
Page 288

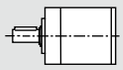

Encoder MILE
512 - 4096 CPT,
2 channels
Page 309

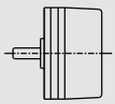

Recommended Electronics:

ESCON Mod. 50/5	Page 343
ESCON 50/5	344
ESCON 70/10	344
DEC Module 50/5	346
EPOS2 24/5	351
EPOS2 50/5	351
EPOS2 70/10	351
EPOS2 P 24/5	354
EPOS3 70/10 EtherCAT	357
MAXPOS 50/5	360
Notes	**24**

EC 90 flat ∅90 mm, brushless, 90 Watt

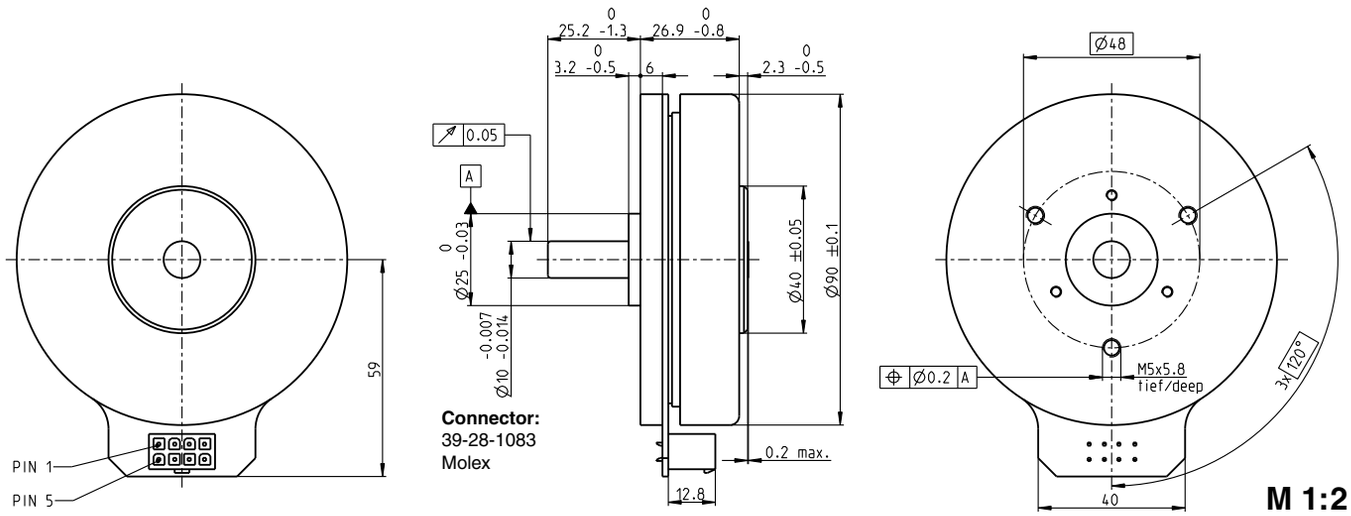

Stock program
Standard program
Special program (on request)

Part Numbers

with Hall sensors	323772	429271	244879

Motor Data

	Values at nominal voltage				
1	Nominal voltage	V	24	36	48
2	No load speed	rpm	3190	3120	2080
3	No load current	mA	544	348	135
4	Nominal speed	rpm	2590	2510	1610
5	Nominal torque (max. continuous torque)	mNm	444	560	533
6	Nominal current (max. continuous current)	A	6.06	4.76	2.27
7	Stall torque	mNm	4940	7480	4570
8	Starting current	A	70	69	21.1
9	Max. efficiency	%	84	87	85
	Characteristics				
10	Terminal resistance phase to phase	Ω	0.343	0.522	2.28
11	Terminal inductance phase to phase	mH	0.264	0.625	2.5
12	Torque constant	mNm/A	70.5	109	217
13	Speed constant	rpm/V	135	88	44
14	Speed/torque gradient	rpm/mNm	0.659	0.423	0.462
15	Mechanical time constant	ms	21.1	13.6	14.8
16	Rotor inertia	gcm^2	3060	3060	3060

Specifications

Thermal data

17	Thermal resistance housing-ambient	1.91 K/W
18	Thermal resistance winding-housing	2.6 K/W
19	Thermal time constant winding	46 s
20	Thermal time constant motor	283 s
21	Ambient temperature	-40…+100°C
22	Max. permissible winding temperature	+125°C

Mechanical data (preloaded ball bearings)

23	Max. permissible speed	5000 rpm
24	Axial play at axial load < 15 N	0 mm
	> 15 N	0.14 mm
25	Radial play	preloaded
26	Max. axial load (dynamic)	12 N
27	Max. force for press fits (static)	183 N
	(static, shaft supported)	8000 N
28	Max. radial loading, 7.5 mm from flange	60 N

Other specifications

29	Number of pole pairs	12
30	Number of phases	3
31	Weight of motor	600 g

Values listed in the table are nominal.

Connection

Pin 1	Hall sensor 1
Pin 2	Hall sensor 2
Pin 3	V_{Hall} 4.5…18 VDC
Pin 4	Motor winding 3
Pin 5	Hall sensor 3
Pin 6	GND
Pin 7	Motor winding 1
Pin 8	Motor winding 2

Wiring diagram for Hall sensors see p. 35

Cable

Connection cable Universal, L = 500 mm	**339380**
Connection cable to EPOS2, L = 500 mm	**354045**

Operating Range

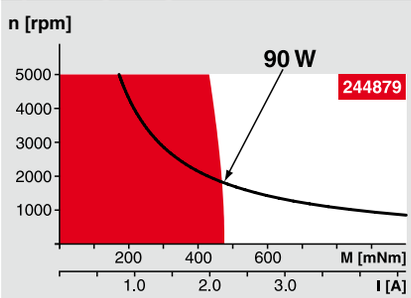

Comments

Continuous operation
In observation of above listed thermal resistance (lines 17 and 18) the maximum permissible winding temperature will be reached during continuous operation at 25°C ambient.
= Thermal limit.

Short term operation
The motor may be briefly overloaded (recurring).

Assigned power rating

maxon Modular System

Overview on page 20–25

Planetary Gearhead
∅52 mm
4 - 30 Nm
Page 288

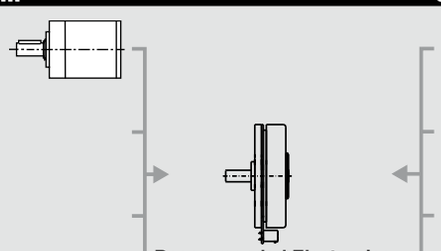

Encoder MILE
800 - 6400 CPT,
2 channels
Page 310

Recommended Electronics:

ESCON Mod. 50/5	Page 343
ESCON Mod. 50/4 EC-S	343
ESCON 50/5	344
ESCON 70/10	344
DEC Module 50/5	346
EPOS2 24/5, 50/5, 70/10	351
EPOS2 P 24/5	354
EPOS3 70/10 EtherCAT	357
MAXPOS 50/5	360
Notes	**24**

For your personal notes

P [mW]	I [mA]	η [%]	n [rpm, min⁻¹]	M [mNm]

maxon gear

maxon gear

Precision spur- and planetary gearheads matched to maxon motors. Gears are advantageously adapted directly to the desired motors in the delivery plant. The motor pinion is the input gearwheel for the first stage and is rigidly affixed to the motor shaft.

Standard Specification No. 102	240
Important considerations	241
Spur- and planetary gearheads	242–290

maxon Standard Specification

With our Standard Specification we offer you a means to judge maxon gearheads in the most important respects. To our knowledge it covers normal applications. The Standard Specification is part of our "General Conditions of Sale". If additional requirements need to be met, we shall cooperate with you to work out more detailed specifications.

For information on standards and directives, refer to page 14 and 15.

The Standard Specification No. 102 for maxon gear

1. **Principles**
   The **Standard Specification** defines checks and tests performed on the complete gearhead and during the production process. In order to guarantee our high quality standard, we check compliance to specified measurements and characteristics of materials, parts and subassemblies through the manufacturing process and the complete gearhead. The obtained measurements are recorded and can be made available to customers if required. Random sampling plans are according to ISO 2859, and DIN/ISO 3951 (inspection by attributes, sequential sampling, variables inspection) as well as internal manufacturing controls. This Standard Specification always applies unless a different one has been agreed between the customer and maxon.

2. **Data**

2.1 **Mechanical data** per outline drawing: Standard measuring instruments (for electrical length measuring DIN 32876, micrometer per DIN 863, dial indicator DIN 878, caliper per DIN 862, bore caliper DIN 2245, thread caliper per DIN 2280 and others) are used.

2.2 **Noise:** Tests are carried out for anomalies within a lot on a subjective basis. Depending on speed the motions in the gearhead cause noise and vibration of varying degrees, frequency and intensity. The noise level experienced with a single sample unit should not be interpreted as indicative of the noise or vibration level to be expected of future deliveries.

2.3 **Service life:** Durability tests are carried out under uniform internal criteria as part of product certification. A gearhead's service life essentially depends on the operating and ambient conditions. Consequently, the many possible variations do not allow us to make a general statement on service life. Minimum expected service life for the relevant maxon gears is based on standard conditions
- 25°C
- Normal storage conditions
- Horizontal position of the unit
- No axial and radial load on the output shaft

2.4 **Environmental influences**
Protection against corrosion: Our products are tested during product certification on the basis of DIN EN 60068-2-30.
Coating of components: Surface treatment and coating procedures used by maxon are selected on the basis of their merits to resist corrosion. These treatments are evaluated at product certification according to their applicable standard.

3. Parameters that differ from or are additional to the data sheet can be set and are a central part of our systematic testing as the customer's specification. Test/inspection certificates are issued by prior agreement.

April 2010 edition/subject to change

Explanation of the pages 242–290

Dimensional drawings
Presentation of the views according to the projection method E (ISO). All dimensions in [mm].

Mounting threads in plastic
Screwed connections on motors with plastic flanges require special attention.

M_A Max. tightening torque [Ncm]
A torque screwdriver may be adjusted to this value.

L Active thread depth [mm]
The relation of the thread depth to the thread diameter must be at least 2:1. The screw-in depth must be less than the usable length of the thread!

Gearhead data
Values are based on an ambient temperature of around 25°C (known as cold data).

Technical data

Recommended input speed
It is based on service life considerations. If this value is greatly exceeded, the service life can be shortened, the gear heats up more and more noise is generated.

Temperature range
The temperature range may be extended for some gears to –40°C and +100°C, but in extremely low temperatures, much greater power consumption must be expected. Special lubrication can be supplied on request, even for other temperature ranges.

Radial play
The radial play test value depends heavily on the mounting, measuring point and adjoining force. For this reason, the clearance of the measuring point to the flange is always given. Measurement is always carried out under a test force that is smaller than the maximum radial load.

Max. permissible radial load
Is stated in a specific distance from the gear flange. If it is not specified in stages, radial load is based on a reference speed of 1,000 rpm on the gear drive shaft.

Axial play
The value for the axial play of a gear is determined between the two axial end positions of the output shaft. This measurement is determined by the type of bearings and may be zero for pre-loaded ball bearings and low axial forces. Minimum play is required for any kind of friction bearings otherwise they will jam.

Max. permissible axial load
Corresponds to the permissible axial load of the drive shaft without damaging the gear. Below the given load, axial play can be kept.

Max. permissible pressing force
Corresponds to the force with which, for example, a coupling element may be mounted to the gear drive shaft.

Line 1 Reduction ratio
The reduction indicates the ratio by which the speed of the gear output shaft is smaller than the motor speed.

Line 2 Absolute reduction ratio
Provides the reduction as an exact ratio of two natural numbers.

Line 3 Max. motor shaft diameter [mm]
The max. motor shaft diameter is based on the motor pinion's root circle.

Line 4 Number of stages
States the number of gear stages engaged in series.

Line 5 Max. continuous torque [Nm]
The continuous torque provides the maximum load permanently applied to the output shaft. If it is exceeded, the service life is significantly shortened.

Line 6 Intermittent torque [Nm]
The intermittent torque is the value that may be applied to the gears for a short period without causing damage. It is defined as follows:
– during 1 second
– during max. 10 % of the life expectancy
If these values are exceeded, a reduced service life must be expected.

Line 7 Efficiency [%]
The specified efficiency is a maximum value that is valid for maximum continuous torque. The efficiency is greatly reduced with very small loads (see diagram). The efficiency is stage-dependent, but is unaffected by the motor speed.

Line 8 Weight [g]

Line 9 Median gear backlash unloaded [°]
Gear backlash is the turning angle of the gear output shaft which, when the input shaft is blocked, the gear output shaft covers when it is turned from one end position to the opposite position. The end positions depend on the torque applied to the output shaft. It should be noted that if the gear output shaft is blocked, based on the reversed reduction ratio, the motor shaft will turn through a much greater angle from stop to stop.

Line 10 Mass inertia [gcm²]
The gear moment of inertia is given at the motor shaft. It is required in order to calculate the additional torque needed for acceleration of the gear components in the case of highly dynamic drives. Variations may arise depending on how lubrication is distributed.

Line 11 Gear length L1 [mm]
L1 describes the gear length down to the motor's axial mount area (reference C in motors).

Line 12 Direction of rotation
The direction of rotation of our planetary gears is always the same as that of the motor shaft. With spur gears, it depends on the number of stages. With even numbers (i.e. 2, 4, 6, 8), the direction of rotation is the same, but the opposite if the numbers are odd (exception: GS 20 A).

Line 13 Max. transmittable continuous power [W]
This value gives the maximum constant output available on the output shaft. If it is exceeded, the service life is considerably shortened.

Line 14 Max. transmittable intermittent power [W]
This value gives the maximum intermittent output available on the output shaft. This range may be used intermittently and repeatedly. It is defined as follows:
– during max. 1 second
– during max. 10% of the operating cycle
If these values are exceeded, a reduced service life must be expected.

Line 15 Max. overload torque
The maximal permitted torque that can be applied for a short period of time (a few seconds) without destroying the gear. It can be considered as break free torque, for example, to overcome static friction of a mechanically jammed drive.

Gearhead efficiency as a function of torque (schematic)

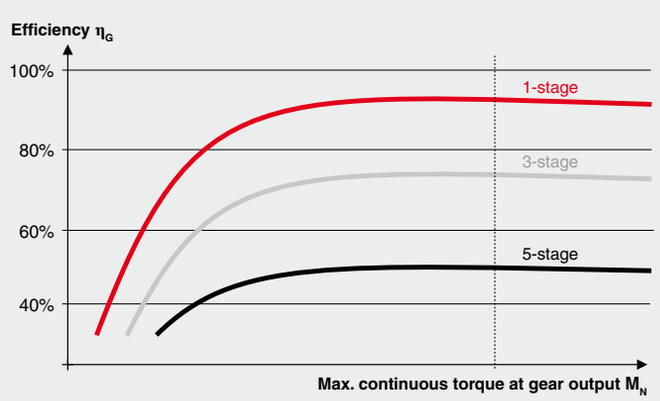

Gear play measurement

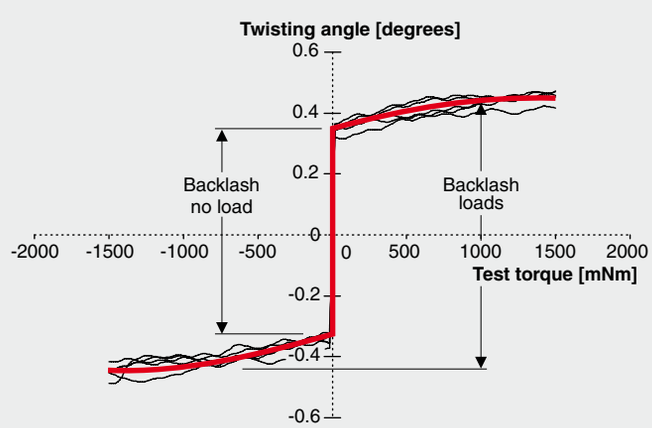

Planetary Gearhead GP 6 A ∅6 mm, 0.002–0.03 Nm

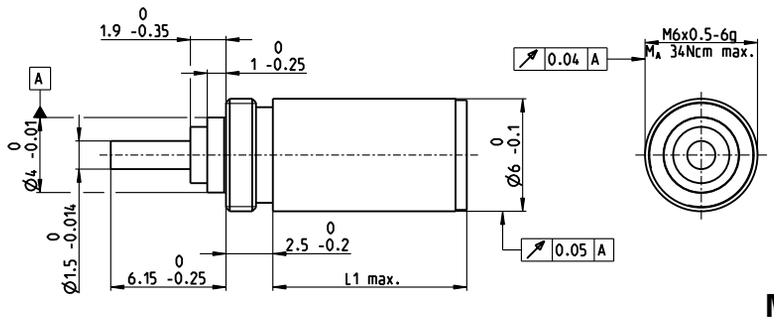

M 2.5:1

Technical Data

Planetary Gearhead					straight teeth
Output shaft					stainless steel
Bearing at output					ball bearing
Option					sleeve bearing
Radial play, 5 mm from flange					max. 0.12 mm
Axial play					max. 0.10 mm
Max. permissible axial load					5 N
Max. permissible force for press fits					10 N
Sense of rotation, drive to output					=
Recommended input speed					< 40000 rpm
Recommended temperature range					-40…+100°C
Number of stages	1	2	3	4	5
Max. radial load, 5 mm from flange	5 N	6 N	7 N	8 N	8 N

Stock program
Standard program
Special program (on request)

Part Numbers

			472919	472920	472921	472229	472922
Gearhead Data							
1	Reduction		3.9:1	15:1	57:1	221:1	854:1
2	Reduction absolute		27/7	729/49	19683/343	531441/2401	14348907/16807
3	Max. motor shaft diameter	mm	1	1	1	1	1
4	Number of stages		1	2	3	4	5
5	Max. continuous torque	Nm	0.002	0.005	0.010	0.030	0.030
6	Intermittently permissible torque at gear output	Nm	0.005	0.010	0.020	0.060	0.060
7	Max. efficiency	%	88	77	68	60	52
8	Weight	g	1.7	2.1	2.5	2.9	3.3
9	Average backlash no load	°	1.8	2.0	2.2	2.5	2.8
10	Mass inertia	gcm^2	0.001	0.001	0.001	0.001	0.001
11	Gearhead length L1	mm	5.3	7.8	10.4	13.0	15.6

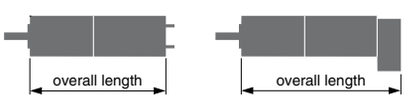

maxon Modular System

+ Motor	Page	+ Sensor/Brake	Page	Overall length [mm] = Motor length + gearhead length + (sensor/brake) + assembly parts				
RE 6, 0.3 W, A	80			21.0	23.5	26.1	28.7	31.3
RE 6, 0.3 W, B	80			25.0	27.5	30.1	32.7	35.3
EC 6, 1.5 W	170			26.7	29.2	31.8	34.4	37.0
EC 6, 2 W	171			26.7	29.2	31.8	34.4	37.0

Planetary Gearhead GP 8 A ∅8 mm, 0.01–0.1 Nm

NEW

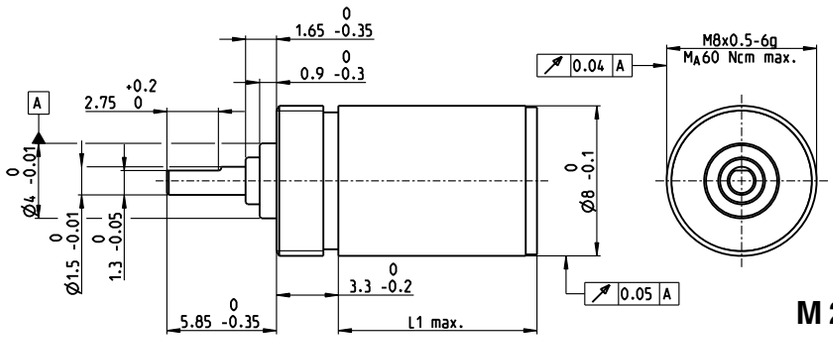

M 2.5:1

Technical Data

Planetary Gearhead	straight teeth
Output shaft	stainless steel, hardened
Bearing at output	ball bearing
Radial play, 5 mm from flange	max. 0.08 mm
Axial play	max. 0.08 mm
Max. permissible axial load	5 N
Max. permissible force for press fits	10 N
Sense of rotation, drive to output	=
Recommended input speed	< 12 000 rpm
Recommended temperature range	-15…+80°C

Number of stages	1	2	3	4	5
Max. radial load, 5 mm from flange	5 N	6 N	7 N	8 N	8 N

Stock program
Standard program
Special program (on request)

Part Numbers

			468999	468998	474124	468997	474127	468996	474129	468995
Gearhead Data										
1	Reduction		4:1	16:1	36:1	64:1	216:1	256:1	1296:1	1024:1
2	Reduction absolute		4	16	36	64	216	256	1296	1024
3	Max. motor shaft diameter	mm	1	1	0.65	1	0.65	1	0.65	1
4	Number of stages		1	2	2	3	3	4	4	5
5	Max. continuous torque	Nm	0.01	0.020	0.008	0.060	0.020	0.080	0.040	0.100
6	Intermittently permissible torque at gear output	Nm	0.015	0.030	0.012	0.090	0.030	0.120	0.060	0.150
7	Max. efficiency	%	90	81	76	73	66	65	57	59
8	Weight	g	2.6	3.2	3.2	3.8	3.8	4.4	4.4	5.0
9	Average backlash no load	°	1.80	2.0	2.4	2.2	2.6	2.50	2.8	2.80
10	Mass inertia	gcm^2	0.004	0.004	0.004	0.004	0.004	0.004	0.004	0.004
11	Gearhead length L1	mm	5.5	8.1	8.3	10.7	11.1	13.3	13.9	15.9

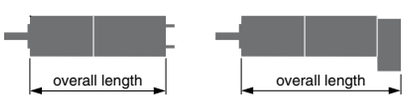

maxon Modular System

+ Motor	Page	+ Sensor/Brake	Page	Overall length [mm] = Motor length + gearhead length + (sensor/brake) + assembly parts							
RE 8, 0.5 W, A	81			22.2	24.8	25.0	27.4	27.8	30.0	30.6	32.6
RE 8, 0.5 W, B	81			25.2	27.8	28.0	30.4	30.8	33.0	33.6	35.6
RE 8, 0.5 W, A	81	MR	312/313	28.2	30.8	31.0	33.4	33.8	36.0	36.6	38.6
RE 8, 0.5 W, A	81	8 OPT	325	30.4	33.0	33.2	35.6	36.0	38.2	38.8	40.8
EC 8, 2 W	172			28.6	31.2	31.4	33.8	34.2	36.4	37.0	39.0

Planetary Gearhead GP 10 K ∅10 mm, 0.005–0.1 Nm

Plastic Version

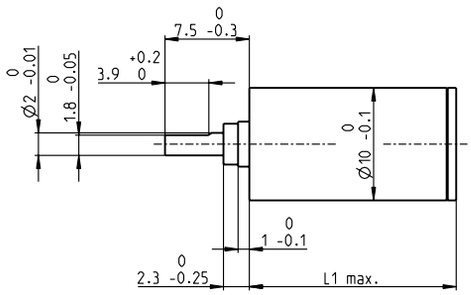

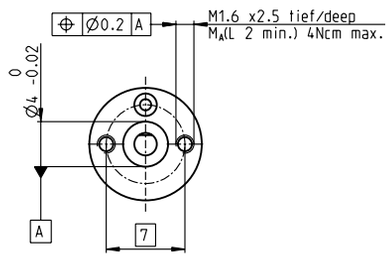

M 1.5:1

Technical Data

Planetary Gearhead	straight teeth
Housing	plastic
Output shaft	stainless steel
Bearing at output	sleeve bearing
Radial play, 5 mm from flange	max. 0.14 mm
Axial play	0.02–0.10 mm
Max. permissible axial load	2 N
Max. permissible force for press fits	10 N
Sense of rotation, drive to output	=
Recommended input speed	< 8000 rpm
Recommended temperature range	-15…+80°C
Max. radial load, 5 mm from flange	1 N

Stock program
Standard program
Special program (on request)

Part Numbers

			110308	110309	110310	110311	110312
Gearhead Data							
1	Reduction		4:1	16:1	64:1	256:1	1024:1
2	Reduction absolute		4	16	64	256	1024
3	Max. motor shaft diameter	mm	1.2	1.2	1.2	1.2	1.2
4	Number of stages		1	2	3	4	5
5	Max. continuous torque	Nm	0.005	0.015	0.054	0.100	0.100
6	Intermittently permissible torque at gear output	Nm	0.005	0.015	0.054	0.100	0.100
7	Max. efficiency	%	90	80	70	60	55
8	Weight	g	2.1	2.5	2.8	3.2	3.6
9	Average backlash no load	°	1.8	2.0	2.2	2.5	2.8
10	Mass inertia	gcm^2	0.004	0.003	0.003	0.003	0.003
11	Gearhead length L1	mm	10.2	14.3	18.4	22.5	26.6

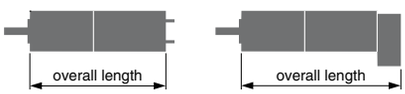

maxon Modular System

+ Motor	Page	+ Sensor/Brake	Page	Overall length [mm] = Motor length + gearhead length + (sensor/brake) + assembly parts				
RE 10, 0.75 W	82/83			27.3	31.4	35.5	39.6	43.7
RE 10, 0.75 W	83	MR	312/313	33.1	37.2	41.3	45.4	49.5
RE 10, 0.75 W	83	MEnc 10	333	35.4	39.5	43.6	47.7	51.8
RE 10, 1.5 W	84/85			34.9	39.0	43.1	47.2	51.3
RE 10, 1.5 W	85	MR	312/313	40.7	44.8	48.9	53.0	57.1
RE 10, 1.5 W	85	MEnc 10	333	43.0	47.1	51.2	55.3	59.4
EC 9.2 flat, 0.5 W	218			22.8	26.9	31.0	35.1	39.2
EC 10 flat, 0.2 W	219			13.6	17.7	21.8	25.9	30.0

Planetary Gearhead GP 10 A ∅10 mm, 0.01–0.15 Nm

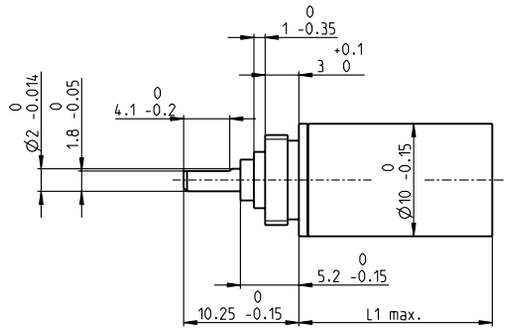

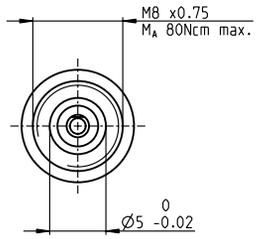

M 1.5:1

Technical Data

Planetary Gearhead					straight teeth
Output shaft					stainless steel
Bearing at output					preloaded ball bearings
Radial play, 5 mm from flange					max. 0.08 mm
Axial play at axial load	< 2 N				0 mm
	> 2 N				max. 0.04 mm
Max. permissible axial load					5 N
Max. permissible force for press fits					10 N
Sense of rotation, drive to output					=
Recommended input speed					< 12000 rpm
Recommended temperature range					-15…+80°C
Extended range as option					-40…+100°C
Number of stages	1	2	3	4	5
Max. radial load, 5 mm from flange	5 N	10 N	15 N	20 N	25 N

Stock program
Standard program
Special program (on request)

Part Numbers

			218415	218416	218417	218418	218419	332422	332423	332424	332425	332426
Gearhead Data												
1	Reduction		4:1	16:1	64:1	256:1	1024:1	4:1	16:1	64:1	256:1	1024:1
2	Reduction absolute		4	16	64	256	1024	4	16	64	256	1024
3	Max. motor shaft diameter	mm	1.2	1.2	1.2	1.2	1.2	1.2	1.2	1.2	1.2	1.2
4	Number of stages		1	2	3	4	5	1	2	3	4	5
5	Max. continuous torque	Nm	0.010	0.030	0.100	0.150	0.150	0.010	0.030	0.100	0.150	0.150
6	Intermittently permissible torque at gear output	Nm	0.020	0.050	0.150	0.200	0.200	0.020	0.050	0.150	0.200	0.200
7	Max. efficiency	%	90	81	73	65	59	90	81	73	65	59
8	Weight	g	6.7	7.2	7.7	8.2	8.7	6.7	7.2	7.7	8.2	8.7
9	Average backlash no load	°	1.5	1.8	2.0	2.2	2.5	1.5	1.8	2.0	2.2	2.5
10	Mass inertia	gcm^2	0.005	0.005	0.005	0.005	0.005	0.005	0.005	0.005	0.005	0.005
11	Gearhead length L1	mm	10.4	14.1	17.2	20.4	23.5	10.4	14.1	17.2	20.4	23.5

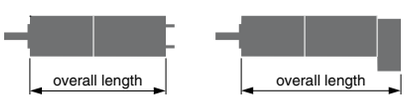

maxon Modular System

+ Motor	Page	+ Sensor/Brake	Page	Overall length [mm] = Motor length + gearhead length + (sensor/brake) + assembly parts									
RE 10, 0.75 W	82/83			27.5	31.2	34.3	37.5	40.6					
RE 10, 0.75 W	83	MR	312/313	33.3	37.0	40.1	43.3	46.4					
RE 10, 0.75 W	83	MEnc 10	333	35.6	39.3	42.4	45.6	48.7					
RE 10, 1.5 W	84/85			35.1	38.8	41.9	45.1	48.2					
RE 10, 1.5 W	85	MR	312/313	40.9	44.6	47.7	50.9	54.0					
RE 10, 1.5 W	85	MEnc 10	333	43.2	46.9	50.0	53.2	56.3					
A-max 12	119/120			31.7	35.4	38.5	41.7	44.8					
A-max 12, 0.5 W	120	MR	312/313	35.8	39.5	42.6	45.8	48.9					
EC 10, 8 W	173								36.2	39.9	43.0	46.2	49.3
EC 9.2 flat, 0.5 W	218			23.0	26.7	29.8	33.0	36.1					
EC 10 flat, 0.2 W	219			13.8	17.5	20.6	23.8	26.9					

Spur Gearhead GS 12 A ∅12 mm, 0.01–0.03 Nm

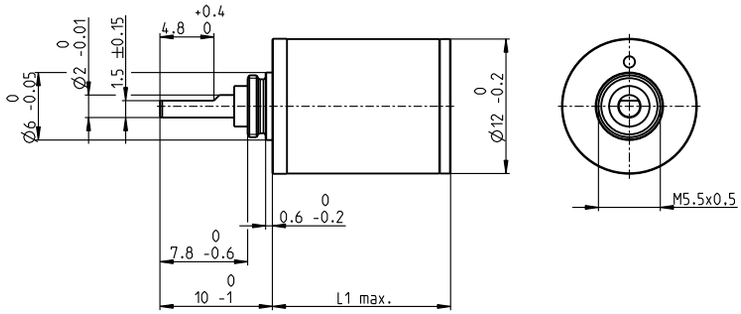

M 1.5:1

Technical Data

Spur Gearhead	straight teeth
Output shaft	stainless steel, hardened
Bearing at output	sleeve bearing
Radial play, 6.5 mm from flange	max. 0.05 mm
Axial play	0.02–0.12 mm
Max. permissible axial load	2 N
Max. permissible force for press fits	30 N
Recommended input speed	< 8000 rpm
Recommended temperature range	-15…+100°C
Extended range as option	-40…+100°C
Max. radial load, 6.5 mm from flange	1.5 N

Stock program
Standard program
Special program (on request)

			Part Numbers						
			310301	313872	313990	313991	310311	313993	310316
Gearhead Data									
1	Reduction		6.4:1	13:1	58:1	141:1	371:1	485:1	3101:1
2	Reduction absolute		403/63	21866/1694	724594/12474	20138716/142884	26782109/72171	624300196/1285956	11537547853/3720087
3	Max. motor shaft diameter	mm	1.2	1.0	1.0	1.2	1.0	1.2	1.2
	Part Numbers		310302	310304	310307	313992		310313	310317
1	Reduction		9.1:1	22:1	76:1	200:1		900:1	4402:1
2	Reduction absolute		899/99	12493/567	387283/5103	22462414/112266		372178963/413343	25737606749/5845851
3	Max. motor shaft diameter	mm	1.0	1.2	1.2	1.0		1.2	1.0
	Part Numbers			310305	310308	310310		310314	
1	Reduction			31:1	108:1	261:1		1278:1	
2	Reduction absolute			27869/891	863939/8019	12005773/45927		830245379/649539	
3	Max. motor shaft diameter	mm		1.0	1.0	1.2		1.0	
4	Number of stages		2	3	4	5	5	6	7
5	Max. continuous torque	Nm	0.010	0.015	0.020	0.025	0.025	0.030	0.030
6	Intermittently permissible torque at gear output	Nm	0.030	0.035	0.040	0.045	0.045	0.050	0.050
12	Sense of rotation, drive to output		=	≠	=	≠	≠	=	≠
7	Max. efficiency	%	81	73	66	59	59	53	48
8	Weight	g	6.5	7.4	8.3	9.2	9.2	10.1	11
9	Average backlash no load	°	1	1	1.2	1.2	1.2	1.2	1.5
10	Mass inertia	gcm^2	0.002	0.002	0.002	0.002	0.002	0.002	0.002
11	Gearhead length L1	mm	10	12	14	16	16	18	20

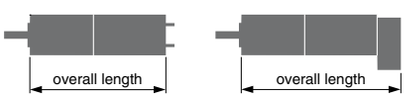

maxon Modular System

+ Motor	Page	+ Sensor/Brake	Page	Overall length [mm] = Motor length + gearhead length + (sensor/brake) + assembly parts						
A-max 12	119/120			31.3	33.3	35.3	37.3	37.3	39.3	41.3
A-max 12, 0.5 W	120	MR	312/313	35.4	37.4	39.4	41.4	41.4	43.4	45.4

Planetary Gearhead GP 13 K ∅13 mm, 0.05–0.15 Nm

Plastic Version

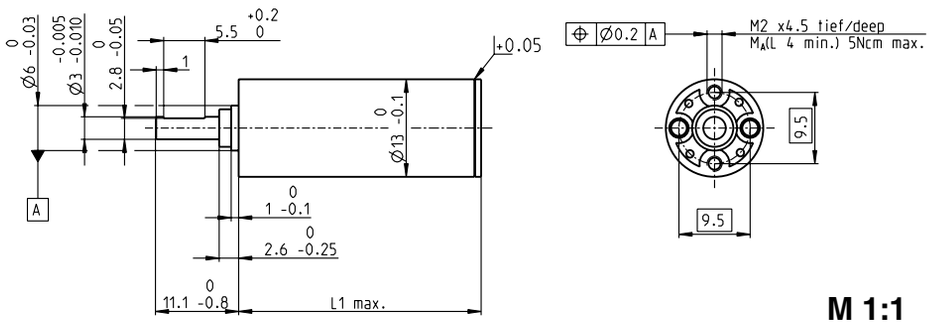

M 1:1

Technical Data

Planetary Gearhead	straight teeth
Housing, planetary wheels	plastic
Output shaft	stainless steel, hardened
Bearing at output	sleeve bearing
Radial play, 6 mm from flange	max. 0.12 mm
Axial play	0.02–0.10 mm
Max. permissible axial load	5 N
Max. permissible force for press fits	100 N
Sense of rotation, drive to output	=
Recommended input speed	< 8000 rpm
Recommended temperature range	-15...+80°C

Number of stages	1	2	3	4	5
Max. radial load, 6 mm from flange	2 N	3 N	4 N	5 N	5 N

Stock program
Standard program
Special program (on request)

Part Numbers

			137149	137150	137151	137152	137153
Gearhead Data							
1	Reduction		4.1:1	17:1	67:1	275:1	1119:1
2	Reduction absolute		57/14	3249/196	185193/2744	10556001/38416	601692057/537824
3	Max. motor shaft diameter	mm	1.5	1.5	1.5	1.5	1.5
4	Number of stages		1	2	3	4	5
5	Max. continuous torque	Nm	0.050	0.075	0.100	0.125	0.150
6	Intermittently permissible torque at gear output	Nm	0.050	0.075	0.100	0.125	0.150
7	Max. efficiency	%	85	70	60	50	45
8	Weight	g	5.9	6.5	7.0	7.5	8.0
9	Average backlash no load	°	1.8	2.0	2.2	2.5	2.8
10	Mass inertia	gcm^2	0.025	0.009	0.008	0.008	0.008
11	Gearhead length L1	mm	15.5	21.4	25.1	28.8	32.5

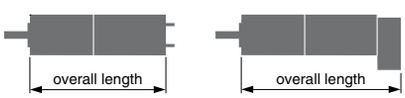

maxon Modular System

+ Motor	Page	+ Sensor/Brake	Page	Overall length [mm] = Motor length + gearhead length + (sensor/brake) + assembly parts				
RE 13	87/89			34.8	40.7	44.4	48.1	51.8
RE 13, 0.75 W	89	MR	312-314	41.9	47.8	51.5	55.2	58.9
RE 13, 0.75 W	89	MEnc 13	334	42.6	48.5	52.2	55.9	59.6
RE 13	91/93			47.0	52.9	56.6	60.3	64.0
RE 13, 2 W	93	MR	312-314	54.1	60.0	63.7	67.4	71.1
RE 13, 2 W	93	MEnc 13	334	54.8	60.7	64.4	68.1	71.8
RE 13, 1.5 W	95/97			37.9	43.8	47.5	51.2	54.9
RE 13, 1.5 W	97	MR	312-314	44.0	49.9	53.6	57.3	61.0
RE 13, 1.5 W	97	MEnc 13	334	45.9	51.8	55.5	59.2	62.9
RE 13, 3 W	99/101			50.1	56.0	59.7	63.4	67.1
RE 13, 3 W	101	MR	312-314	56.2	62.1	65.8	69.5	73.2
RE 13, 3 W	101	MEnc 13	334	58.1	64.0	67.7	71.4	75.1
A-max 12	119/120			36.8	42.7	46.4	50.1	53.8
A-max 12, 0.5 W	120	MR	312-314	40.7	46.6	50.3	54.0	57.7
RE-max 13	147/148			36.1	42.0	45.7	49.4	53.1
RE-max 13, 0.75 W	148	MR	312-314	40.8	46.7	50.4	54.1	57.8
RE-max 13	149/150			47.1	53.0	56.7	60.4	64.1
RE-max 13, 2 W	150	MR	312-314	51.8	57.7	61.4	65.1	68.8

Planetary Gearhead GP 13 A ∅13 mm, 0.2–0.35 Nm

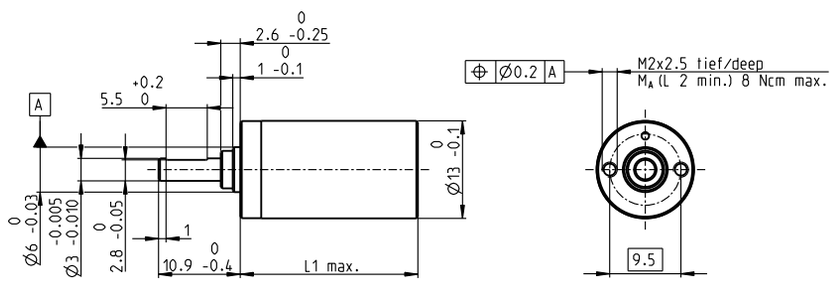

M 1:1

Technical Data

Planetary Gearhead					straight teeth
Output shaft					stainless steel, hardened
Bearing at output					sleeve bearing
Radial play, 6 mm from flange					max. 0.055 mm
Axial play					0.02–0.10 mm
Max. permissible axial load					8 N
Max. permissible force for press fits					100 N
Sense of rotation, drive to output					=
Recommended input speed					< 8000 rpm
Recommended temperature range					-40…+100°C
Number of stages	1	2	3	4	5
Max. radial load, 6 mm from flange	8 N	12 N	16 N	20 N	20 N

Stock program
Standard program
Special program (on request)

Part Numbers

			110313	110314	110315	110316	110317
Gearhead Data							
1	Reduction		4.1 : 1	17 : 1	67 : 1	275 : 1	1119 : 1
2	Reduction absolute		57/14	3249/196	185193/2744	10556001/38416	601692057/537824
3	Max. motor shaft diameter	mm	1.5	1.5	1.5	1.5	1.5
	Part Numbers		352365	352366	352367	352368	352369
1	Reduction		5.1 : 1	26 : 1	131 : 1	664 : 1	3373 : 1
2	Reduction absolute		66/13	4356/169	287496/2197	18974736/28561	1252332576/371293
3	Max. motor shaft diameter	mm	1.5	1.5	1.5	1.5	1.5
4	Number of stages		1	2	3	4	5
5	Max. continuous torque	Nm	0.20	0.20	0.30	0.30	0.35
6	Intermittently permissible torque at gear output	Nm	0.30	0.30	0.45	0.45	0.53
7	Max. efficiency	%	91	83	75	69	62
8	Weight	g	11	14	17	20	23
9	Average backlash no load	°	1.0	1.2	1.5	1.8	2.0
10	Mass inertia	gcm²	0.025	0.015	0.015	0.015	0.015
11	Gearhead length L1*	mm	16.0	19.9	23.7	27.6	31.4

* for A-max 12 and RE-max 13 L1 is + 0.3 mm

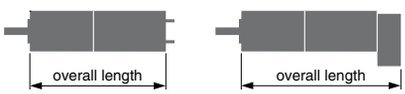

maxon Modular System

+ Motor	Page	+ Sensor/Brake	Page	Overall length [mm] = Motor length + gearhead length + (sensor/brake) + assembly parts				
RE 13	87/89			35.4	39.3	43.1	47.0	50.8
RE 13, 0.75 W	89	MR	312-314	42.5	46.4	50.2	54.1	57.9
RE 13, 0.75 W	89	MEnc 13	334	43.2	47.1	50.9	54.8	58.6
RE 13	91/93			47.6	51.5	55.3	59.2	63.0
RE 13, 2 W	93	MR	312-314	54.7	58.6	62.4	66.3	70.1
RE 13, 2 W	93	MEnc 13	334	55.4	59.3	63.1	67.0	70.8
RE 13, 1.5 W	95/97			38.5	42.4	46.2	50.1	53.9
RE 13, 1.5 W	97	MR	312-314	44.6	48.5	52.3	56.2	60.0
RE 13, 1.5 W	97	MEnc 13	334	46.5	50.4	54.2	58.1	61.9
RE 13, 3 W	99/101			50.7	54.6	58.4	62.3	66.1
RE 13, 3 W	101	MR	312-314	56.8	60.7	64.5	68.4	72.2
RE 13, 3 W	101	MEnc 13	334	58.7	62.6	66.4	70.3	74.1
A-max 12	119/120			37.6	41.5	45.3	49.2	53.0
A-max 12, 0.5 W	120	MR	312-314	41.7	45.6	49.4	53.3	57.1
RE-max 13	147/148			36.9	40.8	44.6	48.5	52.3
RE-max 13, 0.75 W	148	MR	312-314	41.6	45.5	49.3	53.2	57.0
RE-max 13	149/150			47.9	51.8	55.6	59.5	63.3
RE-max 13, 2 W	150	MR	312-314	52.6	56.5	60.3	64.2	68.0
EC 13, 6 W	174			37.4	41.3	45.1	49.0	52.8
EC 13, 12 W	175			49.6	53.5	57.3	61.2	65.0

Option Ball Bearing

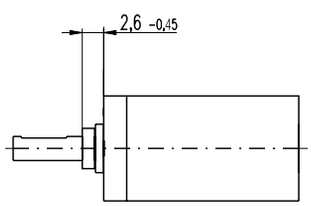

Gearhead length: L1 + 0.2 mm

Part Numbers

4.1 : 1	144300	131 : 1	352393
5.1 : 1	352391	275 : 1	144303
17 : 1	144301	664 : 1	352394
26 : 1	352392	1119 : 1	144304
67 : 1	144302	3373 : 1	352395

Technical Data

Planetary Gearhead					straight teeth
Output shaft					stainless steel, hardened
Bearing at output					preloaded ball bearings
Radial play, 6 mm from flange					max. 0.04 mm
Axial play at axial load				< 5 N	0 mm
				> 5 N	max. 0.04 mm
Max. permissible axial load					8 N
Max. permissible force for press fits					25 N
Sense of rotation, drive to output					=
Recommended input speed					< 8000 rpm
Recommended temperature range					-40…+100°C
Number of stages	1	2	3	4	5
Max. radial load, 6 mm from flange	10 N	15 N	20 N	20 N	20 N

Gearhead values according to sleeve bearing version

Planetary Gearhead GP 13 M Ø13 mm, 0.05–0.275 Nm

Sterilizable

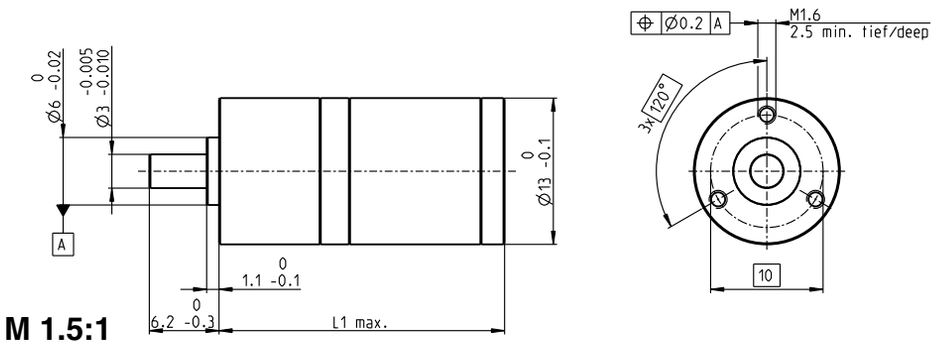

M 1.5:1

Technical Data

Planetary Gearhead			straight teeth
Output shaft			stainless steel
Bearing at output			ball bearing
Radial play, 6 mm from flange			max. 0.2 mm
Axial play			max. 0.1 mm
Max. permissible axial load			50 N
Max. permissible force for press fits			80 N
Sense of rotation, drive to output			=
Recommended input speed			< 60 000 rpm
Recommended temperature range			-40…+100°C
with shaft seal			-10…+100°C
Number of stages	1	2	3
Max. radial load, 6 mm from flange	10 N	15 N	20 N

Option: Inch-version GP size 5 M as standard variant available.

Stock program
Standard program
Special program (on request)

Part Numbers

with shaft seal	370275	370517	370611
without shaft seal	370617	370622	370623

Gearhead Data

1	Reduction		5:1	25:1	125:1
2	Reduction absolute		5/1	25/1	125/1
3	Max. motor shaft diameter	mm	1.5	1.5	1.5
4	Number of stages		1	2	3
5	Max. continuous torque	Nm	0.05	0.225	0.275
6	Intermittently permissible torque at gear output	Nm	0.1	0.25	0.3
7	Max. efficiency, sealed	%	85	80	70
8	Weight	g	16	20	23
9	Average backlash no load	°	1.2	1.4	1.6
10	Mass inertia	gcm^2	0.017	0.016	0.016
11	Gearhead length L1	mm	25.4	31.3	37.2
13	Max. transmittable continuous power	W	30	20	15
14	Max. transmittable intermittent power	W	40	25	20

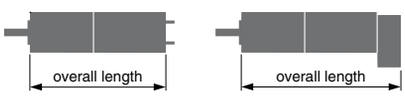

maxon Modular System

+ Motor	Page	+ Sensor/Brake	Page	Overall length [mm] = Motor length + gearhead length + (sensor/brake) + assembly parts		
EC 13, 30 W, ster.	176			62.5	68.4	74.3
EC 13, 50 W, ster.	177			73.5	79.4	85.3

Operating Range (Output shaft)

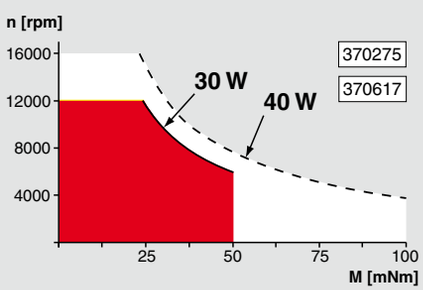

Comments

Continuous operating
Valid in an ambient temperature of 25°C and taking account of stage-dependent limits (points 5 and 13). The recommended motor speed must not be exceeded.

Short term operation
Valid in an ambient temperature of 25°C and taking account of stage-dependent limits (points 6 and 14). This range may be used intermittently and repeatedly. It is defined as follows

– during max. 1 second
– during max. 10% of the operating cycle

max. transferable continuous performance

max. transferable intermittent performance

Application	Sterilization information	
Sterilizable Devices	Tested for 1000 sterilization cycles in an autoclave. No need to dismantle.	
Saws	Sterilization with steam	
Surgical Reamers	Temperature	134°C ± 4°C
Arthroscopic Shavers	Compression pressure up to	2.3 bar
Surgical Staplers	Rel. humidity	100 %
Dental Tools	Cycle length	18 minutes

Spur Gearhead GS 16 K ∅16 mm, 0.01–0.03 Nm

Plastic Version

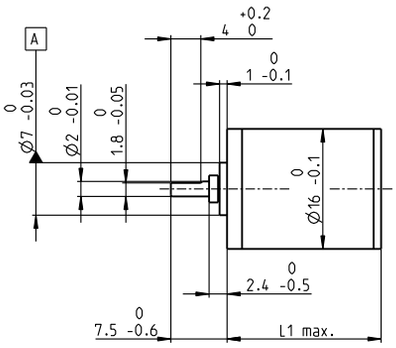

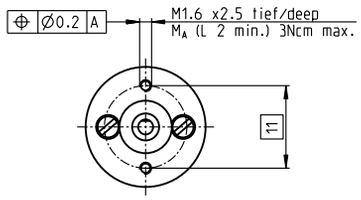

M 1:1

Technical Data

Spur Gearhead	straight teeth
Output shaft	stainless steel, hardened
Bearing at output	sleeve bearing
Radial play, 6.5 mm from flange	max. 0.15 mm
Axial play	0.02–0.12 mm
Max. permissible axial load	2 N
Max. permissible force for press fits	15 N
Recommended input speed	< 8000 rpm
Recommended temperature range	-15…+80°C
Max. radial load, 6.5 mm from flange	1 N

Stock program
Standard program
Special program (on request)

Part Numbers

			201463	201465	201467	201469	201471	201473
Gearhead Data								
1	Reduction		6.4:1	22:1	76:1	261:1	900:1	3101:1
2	Reduction absolute		403/63	12493/567	387283/5103	12005773/45927	372178963/413343	11537547853/3720087
3	Max. motor shaft diameter	mm	1.5	1.5	1.5	1.5	1.5	1.5
	Part Numbers		207405	207406	207407	207408	207409	207410
1	Reduction		9.1:1	31:1	108:1	371:1	1278:1	4402:1
2	Reduction absolute		899/99	27869/891	863939/8019	26782109/72171	830245379/649539	25737606749/5845851
3	Max. motor shaft diameter	mm	1.5	1.5	1.5	1.5	1.5	1.5
	Part Numbers		201464	201466	201468	201470	201472	201474
1	Reduction		12:1	41:1	141:1	485:1	1670:1	5752:1
2	Reduction absolute		961/81	29791/729	923521/6561	28629151/59049	887503681/531441	27512614111/4782969
3	Max. motor shaft diameter	mm	1	1	1	1	1	1
4	Number of stages		2	3	4	5	6	7
5	Max. continuous torque	Nm	0.010	0.020	0.030	0.030	0.030	0.030
6	Intermittently permissible torque at gear output	Nm	0.10	0.10	0.10	0.10	0.10	0.10
12	Sense of rotation, drive to output		=	≠	=	≠	=	≠
7	Max. efficiency	%	81	73	66	59	53	48
8	Weight	g	9.0	9.8	10.2	10.7	11.3	11.7
9	Average backlash no load	°	1.0	1.0	1.2	1.2	1.5	1.5
10	Mass inertia	gcm^2	0.0032	0.0031	0.0031	0.0031	0.0031	0.0031
11	Gearhead length L1	mm	11.8	12.8	14.8	16.8	18.8	20.8

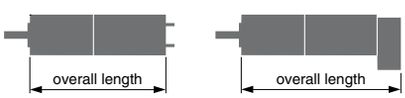

maxon Modular System

+ Motor	Page	+ Sensor/Brake	Page	**Overall length [mm]** = Motor length + gearhead length + (sensor/brake) + assembly parts					
A-max 16	121-124			37.3	38.3	40.3	42.3	44.3	46.3
A-max 16	122/124	MR	315/317	42.3	43.3	45.3	47.3	49.3	51.3
A-max 16	122/124	MEnc 13	334	45.4	46.4	48.4	50.4	52.4	54.4

Spur Gearhead GS 16 A ∅16 mm, 0.015–0.04 Nm

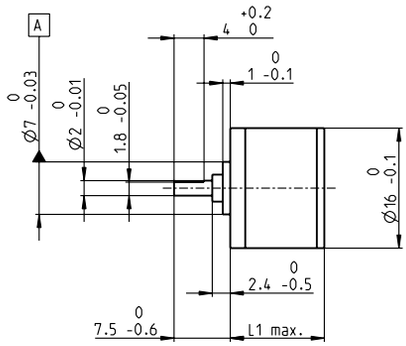

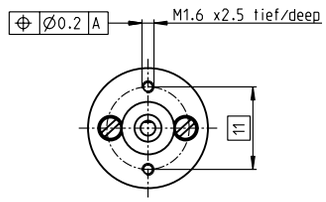

M 1:1

Technical Data

Spur Gearhead	straight teeth
Output shaft	stainless steel, hardened
Bearing at output	sleeve bearing
Radial play, 6.5 mm from flange	max. 0.15 mm
Axial play	0.02–0.12 mm
Max. permissible axial load	2 N
Max. permissible force for press fits	30 N
Recommended input speed	< 8000 rpm
Recommended temperature range	-15…+100°C
Extended range as option	-40…+100°C
Max. radial load, 6.5 mm from flange	2 N

maxon gear

Stock program
Standard program
Special program (on request)

			Part Numbers					
			144409	143761	143763	143765	143767	143769
Gearhead Data								
1	Reduction		6.4:1	22:1	76:1	261:1	900:1	3101:1
2	Reduction absolute		403/63	12493/567	387283/5103	12005773/45927	372178963/413343	11537547853/3720087
3	Max. motor shaft diameter	mm	1.5	1.5	1.5	1.5	1.5	1.5
	Part Numbers		207834	207835	207836	207837	207838	207839
1	Reduction		9.1:1	31:1	108:1	371:1	1278:1	4402:1
2	Reduction absolute		899/99	27869/891	863939/8019	26782109/72171	830245379/649539	25737606749/5845851
3	Max. motor shaft diameter	mm	1.5	1.5	1.5	1.5	1.5	1.5
	Part Numbers		144410	143762	143764	143766	143768	143770
1	Reduction		12:1	41:1	141:1	485:1	1670:1	5752:1
2	Reduction absolute		961/81	29791/729	923521/6561	28629151/59049	887503681/531441	27512614111/4782969
3	Max. motor shaft diameter	mm	1	1	1	1	1	1
4	Number of stages		2	3	4	5	6	7
5	Max. continuous torque	Nm	0.015	0.025	0.035	0.040	0.040	0.040
6	Intermittently permissible torque at gear output	Nm	0.10	0.10	0.10	0.10	0.10	0.10
12	Sense of rotation, drive to output		=	≠	=	≠	=	≠
7	Max. efficiency	%	81	73	66	59	53	48
8	Weight	g	9.0	9.8	10.2	10.7	11.3	11.7
9	Average backlash no load	°	1.0	1.0	1.2	1.2	1.5	1.5
10	Mass inertia	gcm^2	0.0032	0.0031	0.0031	0.0031	0.0031	0.0031
11	Gearhead length L1	mm	11.8	12.8	14.8	16.8	18.8	20.8

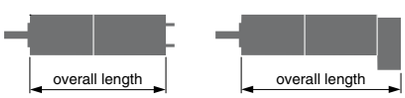

maxon Modular System

+ Motor	Page	+ Sensor/Brake	Page	**Overall length [mm]** = Motor length + gearhead length + (sensor/brake) + assembly parts					
A-max 16	121-124			37.3	38.3	40.3	42.3	44.3	46.3
A-max 16	122/124	MR	315/317	42.3	43.3	45.3	47.3	49.3	51.3
A-max 16	122/124	MEnc 13	334	45.4	46.4	48.4	50.4	52.4	54.4

Spur Gearhead GS 16 V ∅16 mm, 0.06–0.1 Nm

Reinforced

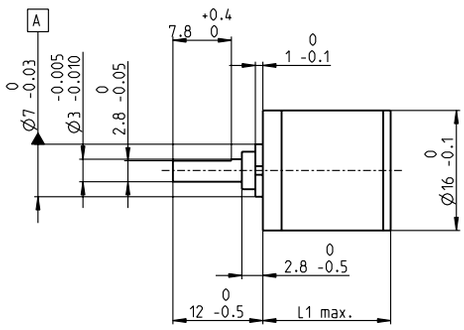

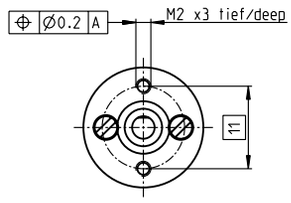

M 1:1

Technical Data

Spur Gearhead					straight teeth
Output shaft					stainless steel, hardened
Bearing at output					preloaded ball bearings
Radial play, 6.5 mm from flange					max. 0.02 mm
Axial play at axial load					< 5 N: 0 mm
					> 5 N: max. 0.05 mm
Max. permissible axial load					5 N
Max. permissible force for press fits					5 N
Recommended input speed					< 8000 rpm
Recommended temperature range					-15…+100°C
Extended range as option					-40…+100°C
Number of stages	1	2	3	4	5
Max. radial load, 6.5 mm from flange	10 N	15 N	20 N	22 N	22 N

Stock program
Standard program
Special program (on request)

			Part Numbers					
			235066	235070	235073	235076	235079	235082
Gearhead Data								
1	Reduction		6.4:1	22:1	76:1	261:1	900:1	3101:1
2	Reduction absolute		403/63	12493/567	387283/5103	12005773/45927	372178963/413343	11537547853/3720087
3	Max. motor shaft diameter	mm	1.5	1.5	1.5	1.5	1.5	1.5
	Part Numbers		235068	235071	235074	235077	235080	235083
1	Reduction		9.1:1	31:1	108:1	371:1	1278:1	4402:1
2	Reduction absolute		899/99	27869/891	863939/8019	26782109/72171	830245379/649539	25737606749/5845851
3	Max. motor shaft diameter	mm	1.5	1.5	1.5	1.5	1.5	1.5
	Part Numbers		235069	235072	235075	235078	235081	235084
1	Reduction		12:1	41:1	141:1	485:1	1670:1	5752:1
2	Reduction absolute		961/81	29791/729	923521/6561	28629151/59049	887503681/531441	27512614111/4782969
3	Max. motor shaft diameter	mm	1	1	1	1	1	1
4	Number of stages		2	3	4	5	6	7
5	Max. continuous torque	Nm	0.06	0.06	0.10	0.10	0.10	0.10
6	Intermittently permissible torque at gear output	Nm	0.15	0.15	0.30	0.30	0.30	0.30
12	Sense of rotation, drive to output		=	≠	=	≠	=	≠
7	Max. efficiency	%	81	73	66	59	53	48
8	Weight	g	13.8	14.5	15.8	17.0	17.9	18.5
9	Average backlash no load	°	1.0	1.0	1.2	1.2	1.5	1.5
10	Mass inertia	gcm^2	0.0057	0.0052	0.0035	0.0032	0.0032	0.0032
11	Gearhead length L1	mm	14.3	17.3	19.3	21.3	23.3	25.3

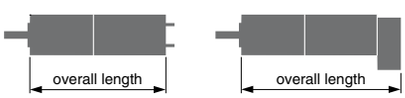

maxon Modular System

+ Motor	Page	+ Sensor/Brake	Page	Overall length [mm] = Motor length + gearhead length + (sensor/brake) + assembly parts					
A-max 16	121-124			39.8	42.8	44.8	46.8	48.8	50.8
A-max 16	122/124	MR	315/317	44.8	47.8	49.8	51.8	53.8	55.8
A-max 16	122/124	MEnc 13	334	47.9	50.9	52.9	54.9	56.9	58.9

Spur Gearhead GS 16 VZ ∅16 mm, 0.06–0.1 Nm

Low Backlash

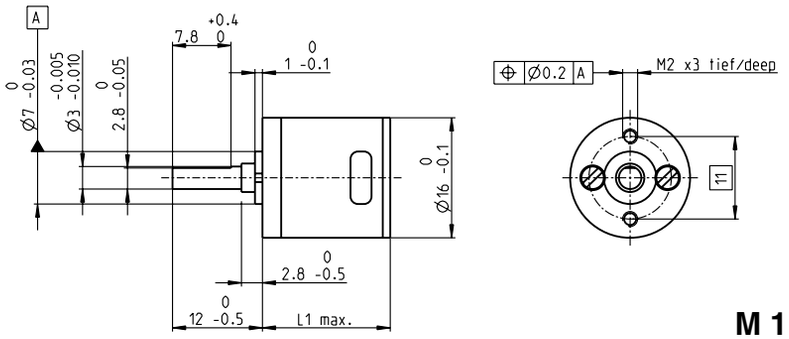

M 1:1

Technical Data

Spur Gearhead			straight teeth
Output shaft			stainless steel, hardened
Bearing at output			preloaded ball bearings
Radial play, 6.5 mm from flange			max. 0.02 mm
Axial play at axial load	< 5 N		0 mm
	> 5 N		max. 0.05 mm
Max. permissible axial load			5 N
Max. permissible force for press fits			5 N
Recommended input speed			< 8000 rpm
Recommended temperature range			-15…+100°C
Extended range as option			-40…+100°C
Number of stages	4	5	6
Max. radial load, 6.5 mm from flange	20 N	22 N	22 N

Stock program
Standard program
Special program (on request)

			Part Numbers		
			327789	327796	327800
Gearhead Data					
1	Reduction		76:1	261:1	900:1
2	Reduction absolute		387283/5103	12005773/45927	372178963/413343
3	Max. motor shaft diameter	mm	1.5	1.5	1.5
	Part Numbers		327788	327797	327801
1	Reduction		108:1	371:1	1278:1
2	Reduction absolute		863939/8019	26782109/72171	830245379/649539
3	Max. motor shaft diameter	mm	1.5	1.5	1.5
	Part Numbers		327790	327799	327802
1	Reduction		141:1	485:1	1670:1
2	Reduction absolute		923521/6561	28629151/59049	887503681/531441
3	Max. motor shaft diameter	mm	1	1	1
4	Number of stages		4	5	6
5	Max. continuous torque	Nm	0.10	0.10	0.10
6	Intermittently permissible torque at gear output	Nm	0.30	0.30	0.30
12	Sense of rotation, drive to output		=	≠	=
7	Max. efficiency	%	62	54	48
8	Weight	g	17.2	18.7	20.2
9	Average backlash no load	°	0.3	0.45	0.5
10	Mass inertia	gcm^2	0.017	0.014	0.013
11	Gearhead length L1	mm	19.3	21.3	23.3

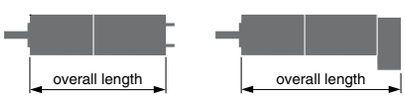

maxon Modular System

+ Motor	Page	+ Sensor/Brake	Page	Overall length [mm] = Motor length + gearhead length + (sensor/brake) + assembly parts		
A-max 16	121-124			44.8	46.8	48.8
A-max 16	122/124	MR	315/317	49.8	51.8	53.8
A-max 16	122/124	MEnc 13	334	52.9	54.9	56.9

Planetary Gearhead GP 16 A ∅16 mm, 0.1–0.3 Nm

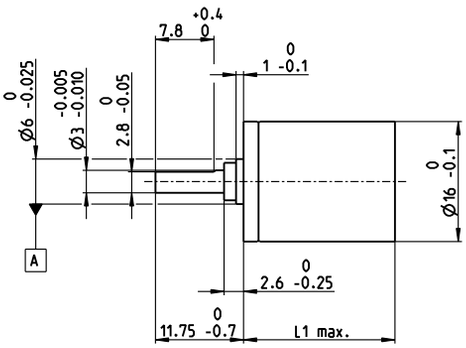

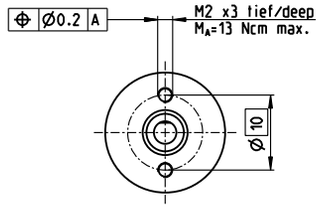

M 1:1

Technical Data

Planetary Gearhead					straight teeth
Output shaft					stainless steel, hardened
Bearing at output					sleeve bearing
Radial play, 6 mm from flange					max. 0.06 mm
Axial play					0.02–0.10 mm
Max. permissible axial load					8 N
Max. permissible force for press fits					100 N
Sense of rotation, drive to output					=
Recommended input speed					< 8000 rpm
Recommended temperature range					-30…+100°C
Extended range as option					-40…+100°C
Number of stages	1	2	3	4	5
Max. radial load, 6 mm from flange	8 N	12 N	16 N	20 N	20 N

Stock program
Standard program
Special program (on request)

		Part Numbers							
		110321	110322	110323	118186	110324	134782	110325	134785
Gearhead Data									
1 Reduction		4.4:1	19:1	84:1	157:1	370:1	690:1	1621:1	3027:1
2 Reduction absolute		57/13	3249/169	185193/2197	19683/125	10556001/28561	1121931/1625	601692057/371293	63950067/21125
3 Max. motor shaft diameter	mm	2	2	2	1.5	2	2	2	2
Part Numbers		118184	134777	134778		134780	118187	134783	134786
1 Reduction		5.4:1	24:1	104:1		455:1	850 :1	1996:1	3728:1
2 Reduction absolute		27/5	1539/65	87723/845		5000211/10985	531441/625	285012027/142805	30292137/8125
3 Max. motor shaft diameter	mm	1.5	2	2		2	1.5	2	2
Part Numbers			118185	134779		134781		134784	118188
1 Reduction			29:1	128:1		561:1		2458:1	4592:1
2 Reduction absolute			729/25	41553/325		2368521/4225		135005697/54925	14348907/3125
3 Max. motor shaft diameter	mm		1.5	2		2		2	1.5
4 Number of stages		1	2	3	3	4	4	5	5
5 Max. continuous torque	Nm	0.10	0.15	0.20	0.20	0.25	0.25	0.30	0.30
6 Intermittently permissible torque at gear output	Nm	0.150	0.225	0.300	0.300	0.375	0.375	0.450	0.450
7 Max. efficiency	%	90	81	73	73	65	65	59	59
8 Weight	g	20	23	27	27	31	31	35	35
9 Average backlash no load	°	1.4	1.6	2.0	2.0	2.4	2.4	3.0	3.0
10 Mass inertia	gcm²	0.07	0.05	0.05	0.04	0.05	0.05	0.05	0.05
11 Gearhead length L1	mm	15.5	19.1	22.7	22.7	26.3	26.3	29.9	29.9

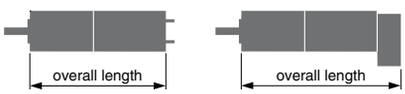

maxon Modular System

+ Motor	Page	+ Sensor/Brake	Page	Overall length [mm] = Motor length + gearhead length + (sensor/brake) + assembly parts							
RE 16, 2 W	102			37.9	41.5	45.1	45.1	48.7	48.7	52.3	52.3
RE 16, 2 W	102	MR	315/317	43.6	47.2	50.8	50.8	54.4	54.4	58.0	58.0
RE 16, 3.2 W	103/104			56.0	59.6	63.2	63.2	66.8	66.8	70.4	70.4
RE 16, 3.2 W	104	MR	315/317	61.0	64.6	68.2	68.2	71.8	71.8	75.4	75.4
RE 16, 3.2 W	104	MEnc 13	334	62.1	65.7	69.3	69.3	72.9	72.9	76.5	76.5
RE 16, 4.5 W	105/106			59.0	62.6	66.2	66.2	69.8	69.8	73.4	73.4
RE 16, 4.5 W	106	MR	315/317	64.0	67.6	71.2	71.2	74.8	74.8	78.4	78.4
RE 16, 4.5 W	106	MEnc 13	334	65.2	68.8	72.4	72.4	76.0	76.0	79.6	79.6
A-max 16	121-124			41.0	44.6	48.2	48.2	51.8	51.8	55.4	55.4
A-max 16	122/124	MR	315/317	46.0	49.6	53.2	53.2	56.8	56.8	60.4	60.4
A-max 16	122/124	MEnc 13	334	49.1	52.7	56.3	56.3	59.9	59.9	63.5	63.5
RE-max 17	151-154			41.0	44.6	48.2	48.2	51.8	51.8	55.4	55.4
RE-max 17	152/154	MR	315/317	46.0	49.6	53.2	53.2	56.8	56.8	60.4	60.4
EC 16, 30 W	178			55.6	59.2	62.8	62.8	66.4	66.4	70.0	70.0
EC 16, 30 W	178	MR	318	66.3	69.9	73.5	73.5	77.1	77.1	80.7	80.7
EC-max 16, 5 W	199			39.6	43.2	46.8	46.8	50.4	50.4	54.0	54.0
EC-max 16, 5 W	199	MR	318	46.9	50.5	54.1	54.1	57.7	57.7	61.3	61.3
EC-max 16, 2-wire	200			49.1	52.7	56.3	56.3	59.9	59.9	63.5	63.5

Option Ball Bearing

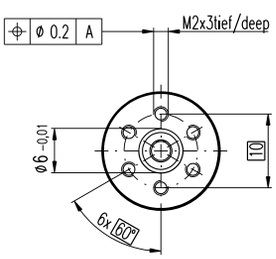

Part Numbers			
4.4 : 1	138333	455 : 1	138343
5.4 : 1	138334	561 : 1	138344
19 : 1	138335	690 : 1	138345
24 : 1	138336	850 : 1	138346
29 : 1	138337	1621 : 1	138347
84 : 1	138338	1996 : 1	138348
104 : 1	138339	2458 : 1	138349
128 : 1	138340	3027 : 1	138350
157 : 1	138341	3728 : 1	138351
370 : 1	138342	4592 : 1	138352

Technical Data

Planetary Gearhead					straight teeth
Output shaft					stainless steel, hardened
Bearing at output					preloaded ball bearings
Radial play, 6 mm from flange					max. 0.08 mm
Axial play at axial load				< 4 N	0 mm
				> 4 N	max. 0.05 mm
Max. permissible axial load					8 N
Max. permissible force for press fits					25 N
Sense of rotation, drive to output					=
Recommended input speed					< 8000 rpm
Recommended temperature range					-15…+100°C
Extended range as option					-40…+100°C
Number of stages	1	2	3	4	5
Max. radial load, 6 mm from flange	10 N	15 N	20 N	20 N	20 N

Gearhead values according to sleeve bearing version

Planetary Gearhead GP 16 C ∅16 mm, 0.2–0.6 Nm

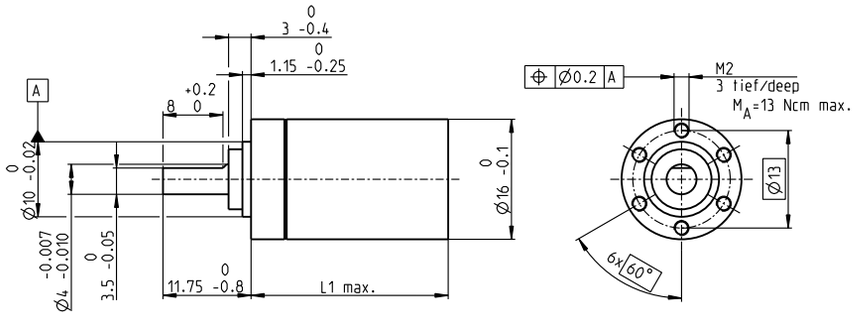

M 1:1

Technical Data

Planetary Gearhead					straight teeth
Output shaft					stainless steel, hardened
Bearing at output					preloaded ball bearings
Radial play, 6 mm from flange					max. 0.08 mm
Axial play at axial load	< 4 N				0 mm
	> 4 N				max. 0.05 mm
Max. permissible axial load					12 N
Max. permissible force for press fits					100 N
Sense of rotation, drive to output					=
Recommended input speed					< 12000 rpm
Recommended temperature range					-30…+100°C
Extended range as option					-40…+100°C
Number of stages	1	2	3	4	5
Max. radial load, 6 mm from flange	20 N	40 N	60 N	80 N	80 N

Stock program
Standard program
Special program (on request)

		Part Numbers							
		416328	407883	416391	401954	328699	416028	416188	414453
Gearhead Data									
1 Reduction		4.4:1	19:1	84:1	157:1	370:1	690:1	1621:1	3027:1
2 Reduction absolute		57/13	3249/169	185193/2197	19683/125	10556001/28561	1121931/1625	601692057/371293	63950067/21125
3 Max. motor shaft diameter	mm	2	2	2	1.5	2	1.5	2	2
Part Numbers		416500	416499	416385		416115	415807	415893	415476
1 Reduction		5.4:1	24:1	104:1		455:1	850:1	1996:1	3728:1
2 Reduction absolute		27/5	1539/65	87723/845		5000211/10985	531441/625	285012027/142805	30292137/8125
3 Max. motor shaft diameter	mm	1.5	1.5	2		2	1.5	2	1.5
Part Numbers			416428	402672		416097		415786	409316
1 Reduction			29:1	128:1		561:1		2458:1	4592:1
2 Reduction absolute			729/25	41553/325		2368521/4225		135005697/54925	14348907/3125
3 Max. motor shaft diameter	mm		1.5	1.5		2		2	1.5
4 Number of stages		1	2	3	3	4	4	5	5
5 Max. continuous torque	Nm	0.2	0.3	0.4	0.4	0.5	0.5	0.6	0.6
6 Intermittently permissible torque at gear output	Nm	0.3	0.45	0.6	0.6	0.75	0.75	0.9	0.9
7 Max. efficiency	%	90	81	73	73	65	65	59	59
8 Weight	g	22	25	29	29	33	33	37	37
9 Average backlash no load	°	1.4	1.6	2	2	2.4	2.4	3	3
10 Mass inertia	gcm^2	0.07	0.05	0.05	0.04	0.05	0.04	0.05	0.05
11 Gearhead length L1	mm	18.1	23.2	26.8	26.8	30.4	30.4	33.9	33.9

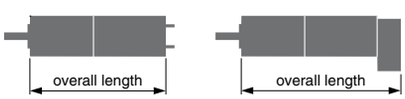

maxon Modular System

+ Motor	Page	+ Sensor/Brake	Page	**Overall length [mm]** = Motor length + gearhead length + (sensor/brake) + assembly parts							
RE 16, 2 W	102			40.5	45.6	49.2	49.2	52.8	52.8	56.3	56.3
RE 16, 2 W	102	MR	315/317	46.2	51.3	54.9	54.9	58.5	58.5	62.0	62.0
RE 16, 3.2 W	103/104			58.6	63.7	67.3	67.3	70.9	70.9	74.4	74.4
RE 16, 3.2 W	104	MR	315/317	63.6	68.7	72.3	72.3	75.9	75.9	79.4	79.4
RE 16, 3.2 W	104	MEnc 13	334	64.7	69.8	73.4	73.4	77.0	77.0	80.5	80.5
RE 16, 4.5 W	105/106			61.6	66.7	70.3	70.3	73.9	73.9	77.4	77.4
RE 16, 4.5 W	106	MR	315/317	66.6	71.7	75.3	75.3	78.9	78.9	82.4	82.4
RE 16, 4.5 W	106	MEnc 13	334	67.8	72.9	76.5	76.5	80.1	80.1	83.6	83.6
A-max 16	121-124			43.6	48.7	52.3	52.3	55.9	55.9	59.4	59.4
A-max 16	122/124	MR	315/317	48.6	53.7	57.3	57.3	60.9	60.9	64.4	64.4
A-max 16	122/124	MEnc 13	334	51.7	56.8	60.4	60.4	64.0	64.0	67.5	67.5
EC 16, 30 W	178			58.2	63.3	66.9	66.9	70.5	70.5	74.0	74.0
EC 16, 30 W	178	MR	318	68.9	74.0	77.6	77.6	81.2	81.2	84.7	84.7
EC 16, 60 W	180			74.2	79.3	82.9	82.9	86.5	86.5	90.0	90.0
EC 16, 60 W	180	MR	318	84.9	90.0	93.6	93.6	97.2	97.2	100.7	100.7
EC-max 16, 5 W	199			42.2	47.3	50.9	50.9	54.5	54.5	58.0	58.0
EC-max 16, 5 W	199	MR	318	49.5	54.6	58.2	58.2	61.8	61.8	65.3	65.3
EC-max 16, 8 W	201			54.2	59.3	62.9	62.9	66.5	66.5	70.0	70.0
EC-max 16, 8 W	201	MR	318	61.5	66.6	70.2	70.2	73.8	73.8	77.3	77.3

Planetary Gearhead GP 16 M ∅16 mm, 0.1–0.3 Nm

Sterilizable

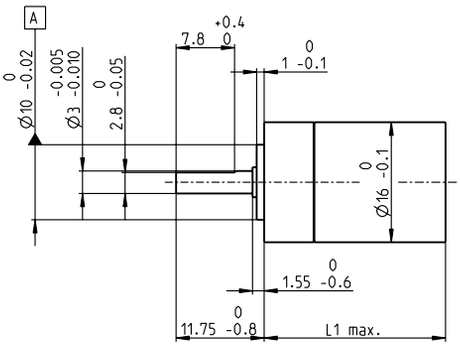

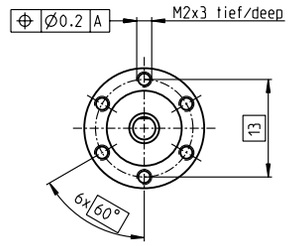

M 1:1

Technical Data

Planetary Gearhead					straight teeth
Output shaft					stainless steel, hardened
Bearing at output					preloaded ball bearings
Radial play, 6 mm from flange					max. 0.08 mm
Axial play at axial load					< 4 N: 0 mm
					> 4 N: max. 0.05 mm
Max. permissible axial load					50 N
Max. permissible force for press fits					100 N
Sense of rotation, drive to output					=
Recommended input speed					< 8000 rpm
Recommended temperature range					0...+80°C
Number of stages	1	2	3	4	5
Max. radial load, 6 mm from flange	10 N	15 N	20 N	20 N	20 N

Stock program
Standard program
Special program (on request)

Part Numbers

			312908	312910	312913	312916	312917	312920	312922	312925
Gearhead Data										
1	Reduction		4.4:1	19:1	84:1	157:1	370:1	690:1	1621:1	3027:1
2	Reduction absolute		57/13	3249/169	185193/2197	19683/125	10556001/28561	1121931/1625	601692057/371293	63950067/21125
3	Max. motor shaft diameter	mm	2	2	2	1.5	2	2	2	2
Part Numbers			312909	312911	312914		312918	312921	312923	312926
1	Reduction		5.4:1	24:1	104:1		455:1	850:1	1996:1	3728:1
2	Reduction absolute		27/5	1539/65	87723/845		5000211/10985	531441/625	285012027/142805	30292137/8125
3	Max. motor shaft diameter	mm	1.5	2	2		2	1.5	2	2
Part Numbers				312912	312915		312919		312924	312927
1	Reduction			29:1	128:1		561:1		2458:1	4592:1
2	Reduction absolute			729/25	41553/325		2368521/4225		135005697/54925	14348907/3125
3	Max. motor shaft diameter	mm		1.5	2		2		2	1.5
4	Number of stages		1	2	3	3	4	4	5	5
5	Max. continuous torque	Nm	0.10	0.15	0.20	0.20	0.25	0.25	0.30	0.30
6	Intermittently permissible torque at gear output	Nm	0.150	0.225	0.300	0.300	0.375	0.375	0.450	0.450
7	Max. efficiency	%	90	81	73	73	65	65	59	59
8	Weight	g	25	28	32	32	36	36	41	41
9	Average backlash no load	°	1.4	1.6	2.0	2.0	2.4	2.4	3.0	3.0
10	Mass inertia	gcm^2	0.07	0.05	0.05	0.04	0.05	0.05	0.05	0.05
11	Gearhead length L1	mm	20.6	24.2	27.8	27.8	31.4	31.4	35.0	35.0

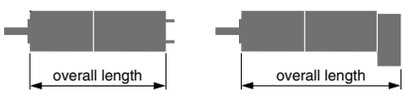

maxon Modular System

+ Motor	Page	+ Sensor/Brake	Page	Overall length [mm] = Motor length + gearhead length + (sensor/brake) + assembly parts							
EC 16, 30 W, ster.	179			60.6	64.2	67.8	67.8	71.4	71.4	75.0	75.0
EC 16, 60 W, ster.	181			76.6	80.2	83.8	83.8	87.4	87.4	91.0	91.0

Application	Sterilization information	
135°C **Sterilizable Devices**	Tested for 100 sterilization cycles in an autoclave. No need to dismantle.	
Saws	Sterilization with steam	
Surgical Reamers	Temperature	134°C ± 4°C
Arthroscopic Shavers	Compression pressure up to	2.3 bar
Surgical Staplers	Rel. humidity	100%
Dental Tools	Cycle length	18 minutes

Planetary Gearhead GP 19 B ∅19 mm, 0.1–0.3 Nm

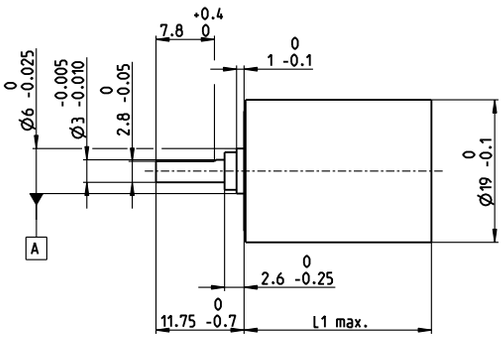

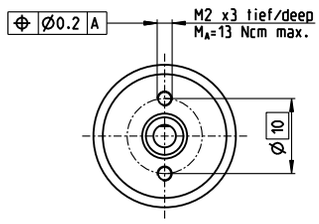

M 1:1

Technical Data

Planetary Gearhead	straight teeth
Output shaft	stainless steel, hardened
Bearing at output	sleeve bearing
Radial play, 6 mm from flange	max. 0.08 mm
Axial play	0.02–0.12 mm
Max. permissible axial load	8 N
Max. permissible force for press fits	100 N
Sense of rotation, drive to output	=
Recommended input speed	< 8000 rpm
Recommended temperature range	-30…+100°C
Extended range as option	-40…+100°C
Number of stages	1 2 3 4 5
Max. radial load, 6 mm from flange	8 N 12 N 16 N 20 N 20 N

Stock program
Standard program
Special program (on request)

Part Numbers

Gearhead Data			149039	149041	149044	149047	149048	149051	149053	149056
1	Reduction		4.4:1	19:1	84:1	157:1	370:1	690:1	1621:1	3027:1
2	Reduction absolute		57/13	3249/169	185193/2197	19683/125	10556001/28561	1121931/1625	601692057/371293	63950067/21125
3	Max. motor shaft diameter	mm	2	2	2	1.5	2	2	2	2
	Part Numbers		149040	149042	149045		149049	149052	149054	149057
1	Reduction		5.4:1	24:1	104:1		455:1	850 :1	1996:1	3728:1
2	Reduction absolute		27/5	1539/65	87723/845		5000211/10985	531441/625	285012027/142805	30292137/8125
3	Max. motor shaft diameter	mm	1.5	2	2		2	1.5	2	2
	Part Numbers			149043	149046		149050		149055	149058
1	Reduction			29:1	128:1		561:1		2458:1	4592:1
2	Reduction absolute			729/25	41553/325		2368521/4225		135005697/54925	14348907/3125
3	Max. motor shaft diameter	mm		1.5	2		2		2	1.5
4	Number of stages		1	2	3	3	4	4	5	5
5	Max. continuous torque	Nm	0.10	0.15	0.20	0.20	0.25	0.25	0.30	0.30
6	Intermittently permissible torque at gear output	Nm	0.150	0.225	0.300	0.300	0.375	0.375	0.450	0.450
7	Max. efficiency	%	90	81	73	73	65	65	59	59
8	Weight	g	26	31	36	36	41	41	46	46
9	Average backlash no load	°	1.4	1.6	2.0	2.0	2.4	2.4	3.0	3.0
10	Mass inertia	gcm^2	0.07	0.05	0.05	0.05	0.05	0.05	0.05	0.05
11	Gearhead length L1	mm	15.9	19.5	23.1	23.1	26.7	26.7	30.3	30.3

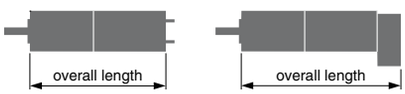

maxon Modular System

+ Motor	Page	+ Sensor/Brake	Page	Overall length [mm] = Motor length + gearhead length + (sensor/brake) + assembly parts							
A-max 19	125/126			44.9	48.5	52.1	52.1	55.7	55.7	59.3	59.3
A-max 19, 1.5 W	126	MR	315/317	50.0	53.6	57.2	57.2	60.8	60.8	64.4	64.4
A-max 19, 1.5 W	126	Enc 22	324	59.3	62.9	66.5	66.5	70.1	70.1	73.7	73.7
A-max 19, 1.5 W	126	MEnc 13	334	52.4	56.0	59.6	59.6	63.2	63.2	66.8	66.8
A-max 19, 2.5 W	127/128			47.5	51.1	54.7	54.7	58.3	58.3	61.9	61.9
A-max 19, 2.5 W	128	MR	315/317	51.8	55.4	59.0	59.0	62.6	62.6	66.2	66.2
A-max 19, 2.5 W	128	Enc 22	324	61.9	65.5	69.1	69.1	72.7	72.7	76.3	76.3
A-max 19, 2.5 W	128	MEnc 13	334	55.0	58.6	62.2	62.2	65.8	65.8	69.4	69.4

Option Ball Bearing

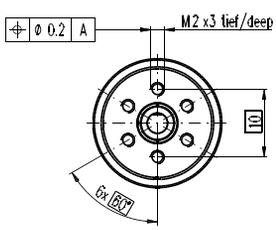

Part Numbers

4.4 : 1	227632	455 : 1	227642
5.4 : 1	227633	561 : 1	227643
19 : 1	227634	690 : 1	227644
24 : 1	227635	850 : 1	227645
29 : 1	227636	1621 : 1	227646
84 : 1	227637	1996 : 1	227647
104 : 1	227638	2458 : 1	227648
128 : 1	227639	3027 : 1	227649
157 : 1	227640	3728 : 1	227650
370 : 1	227641	4592 : 1	227651

Technical Data

Planetary Gearhead	straight teeth
Output shaft	stainless steel, hardened
Bearing at output	preloaded ball bearings
Radial play, 6 mm from flange	max. 0.08 mm
Axial play at axial load	< 4 N 0 mm
	> 4 N max. 0.05 mm
Max. permissible axial load	8 N
Max. permissible force for press fits	25 N
Sense of rotation, drive to output	=
Recommended input speed	< 8000 rpm
Recommended temperature range	-15…+100°C
Extended range as option	-40…+100°C
Number of stages	1 2 3 4 5
Max. radial load, 6 mm from flange	10 N 15 N 20 N 20 N 20 N

Gearhead values according to sleeve bearing version

Planetary Gearhead GP 19 M ∅19 mm, 0.1–0.315 Nm

NEW

Sterilizable

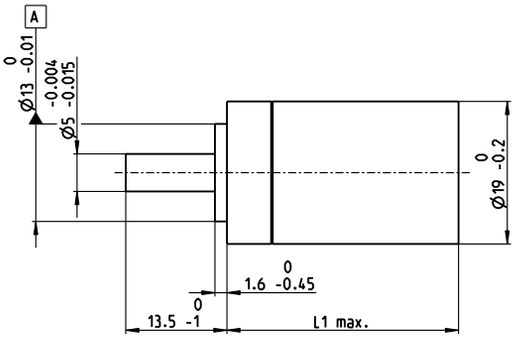

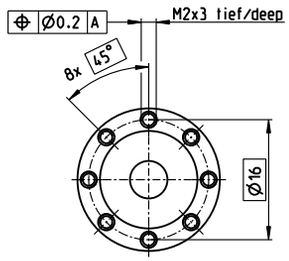

M 1:1

Technical Data

Planetary Gearhead	straight teeth
Output shaft	stainless steel
Bearing at output	ball bearing
Radial play, 10 mm from flange	max. 0.08 mm
Axial play	0.10 mm
Max. permissible axial load	50 N
Max. permissible force for press fits	100 N
Sense of rotation, drive to output	=
Recommended input speed	< 40000 rpm
Recommended temperature range	-10…+100°C
Number of stages	1 2
Max. radial load, 10 mm from flange	20 N 30 N

Stock program
Standard program
Special program (on request)

Part Numbers

	with shaft seal		465710	467808	467821	476914	467863			
Gearhead Data (provisional)										
1	Reduction		4:1	5:1	16:1	20:1	25:1			
2	Reduction absolute		4/1	5/1	16/1	20/1	25/1			
3	Max. motor shaft diameter	mm	3.8	2.7	3.8	2.7	2.7			
4	Number of stages		1	1	2	2	2			
5	Max. continuous torque	Nm	0.1	0.1	0.315	0.315	0.315			
6	Intermittently permissible torque at gear output	Nm	0.125	0.125	0.390	0.390	0.390			
7	Max. efficiency	%	85	85	80	80	80			
8	Weight	g	33	33	54	54	54			
9	Average backlash no load	°	1.0	1.0	1.2	1.2	1.2			
10	Mass inertia	gcm^2	0.16	0.16	0.14	0.14	0.14			
11	Gearhead length L1	mm	31.0	31.0	38.5	38.5	38.5			
13	Max. transmittable continuous power	W	60	60	40	40	40			
14	Max. transmittable intermittent power	W	75	75	50	50	50			

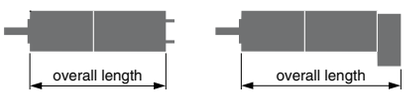

maxon Modular System

+ Motor	Page	+ Sensor/Brake	Page	Overall length [mm] = Motor length + gearhead length + (sensor/brake) + assembly parts				
EC 19, 120 W, ster.	184			83.4	83.4	90.9	90.9	90.9

Operating Range (Output shaft)

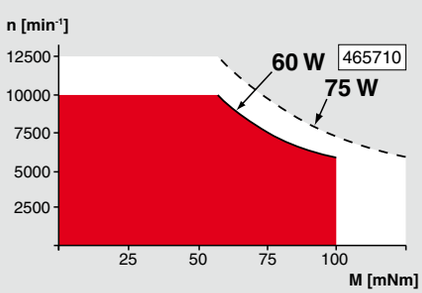

Comments

Continuous operating
Valid in an ambient temperature of 25 °C and taking account of stage-dependent limits (points 5 and 13). The recommended motor speed must not be exceeded.

Short term operation
Valid in an ambient temperature of 25 °C and taking account of stage-dependent limits (points 6 and 14). This range may be used intermittently and repeatedly. It is defined as follows

– during max. 1 second
– during max. 10% of the operating cycle

——— max. transferable continuous performance

- - - - - max. transferable intermittent performance

Application	Sterilization information	
135°C **Sterilizable Devices**	Tested for 1000 sterilization cycles in an autoclave. No need to dismantle.	
Saws	Sterilization with steam	
Surgical Reamers	Temperature	134°C ± 4°C
Arthroscopic Shavers	Compression pressure up to	2.3 bar
Surgical Staplers	Rel. humidity	100 %
Dental Tools	Cycle length	18 minutes

Spur Gearhead GS 20 A ∅20.3 mm, 0.06–0.25 Nm

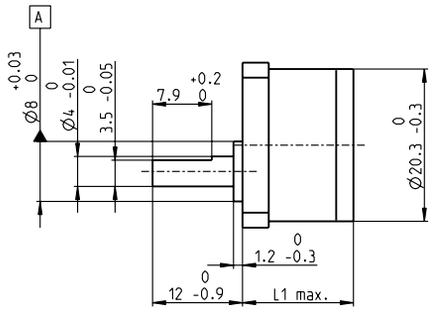

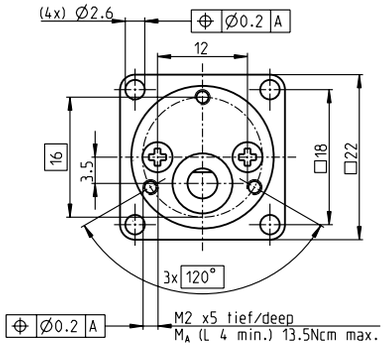

M 1:1

Technical Data

Spur Gearhead					straight teeth
Output shaft					stainless steel, hardened
Bearing at output					sleeve bearing
Radial play, 6 mm from flange					max. 0.1 mm
Axial play					max. 0.3 mm
Max. permissible axial load					8 N
Max. permissible force for press fits					20 N
Recommended input speed					< 8000 rpm
Recommended temperature range					-15…+80°C
Number of stages	2	3	4	5	6
Max. radial load, 6 mm from flange	8 N	12 N	16 N	20 N	20 N

Stock program
Standard program
Special program (on request)

Part Numbers

			258042	258044	258045	258047	258049
Gearhead Data							
1	Reduction		15:1	36:1	88:1	216:1	532:1
2	Reduction absolute		1696/117	54272/1521	1736704/19773	55574528/257049	1778384896/3341637
3	Max. motor shaft diameter	mm	2	2	2	2	2
4	Number of stages		2	3	4	5	6
5	Max. continuous torque	Nm	0.06	0.08	0.15	0.20	0.25
6	Intermittently permissible torque at gear output	Nm	0.07	0.09	0.18	0.25	0.30
12	Sense of rotation, drive to output		≠	=	≠	=	≠
7	Max. efficiency	%	91	83	75	69	62
8	Weight	g	11.8	13.0	14.3	15.6	16.8
9	Average backlash no load	°	1.6	2.0	2.4	2.8	3.2
10	Mass inertia	gcm²	0.016	0.015	0.015	0.015	0.015
11	Gearhead length L1	mm	23.6	25.8	28.1	30.3	32.6

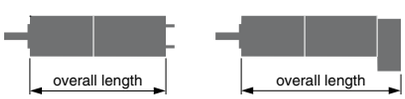

maxon Modular System

+ Motor	Page	+ Sensor/Brake	Page	Overall length [mm] = Motor length + gearhead length + (sensor/brake) + assembly parts				
EC 20 flat, 3 W, A	221			34.1	36.3	38.6	40.8	43.1
EC 20 flat, 3 W, B	221			33.5	35.7	38.0	40.2	42.5
EC 20 flat, 5 W	222			37.7	39.9	42.2	44.4	46.7
EC 20 flat, IE, IP 00	223			40.7	42.9	45.2	47.4	49.7
EC 20 flat, IE, IP 40	223			41.8	44.0	46.3	48.5	50.8
EC 20 flat, IE, IP 00	224			44.7	46.9	49.2	51.4	53.7
EC 20 flat, IE, IP 40	224			45.8	48.0	50.3	52.5	54.8

Planetary Gearhead GP 22 B ∅22 mm, 0.1–0.3 Nm

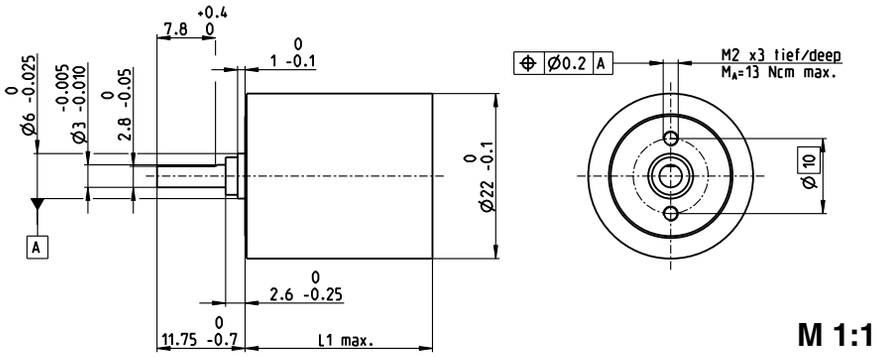

M 1:1

Technical Data

Planetary Gearhead	straight teeth
Housing	steel
Output shaft	stainless steel, hardened
Bearing at output	sleeve bearing
Radial play, 6 mm from flange	max. 0.06 mm
Axial play	0.02–0.10 mm
Max. permissible axial load	8 N
Max. permissible force for press fits	100 N
Sense of rotation, drive to output	=
Recommended input speed	< 8000 rpm
Recommended temperature range	-30…+100°C
Extended range as option	-40…+100°C
Number of stages	1 2 3 4 5
Max. radial load, 6 mm from flange	8 N 12 N 16 N 20 N 20 N

Stock program
Standard program
Special program (on request)

Part Numbers

			110355	110356	110357	118653	110358	134772	110359	134775
Gearhead Data										
1	Reduction		4.4:1	19:1	84:1	157:1	370:1	690:1	1621:1	3027:1
2	Reduction absolute		57/13	3249/169	185193/2197	19683/125	10556001/28561	1121931/1625	601692057/371293	63950067/21125
3	Max. motor shaft diameter	mm	2	2	2	1.5	2	2	2	2
	Part Numbers		118651	134767	134768		134770	118654	134773	134776
1	Reduction		5.4:1	24:1	104:1		455:1	850 :1	1996:1	3728:1
2	Reduction absolute		27/5	1539/65	87723/845		5000211/10985	531441/625	285012027/142805	30292137/8125
3	Max. motor shaft diameter	mm	1.5	2	2		2	1.5	2	2
	Part Numbers			118652	134769		134771		134774	118655
1	Reduction			29:1	128:1		561:1		2458:1	4592:1
2	Reduction absolute			729/25	41553/325		2368521/4225		135005697/54925	14348907/3125
3	Max. motor shaft diameter	mm		1.5	2		2		2	1.5
4	Number of stages		1	2	3	3	4	4	5	5
5	Max. continuous torque	Nm	0.10	0.15	0.20	0.20	0.25	0.25	0.30	0.30
6	Intermittently permissible torque at gear output	Nm	0.150	0.225	0.300	0.300	0.375	0.375	0.450	0.450
7	Max. efficiency	%	90	81	73	73	65	65	59	59
8	Weight	g	39	48	57	57	65	65	73	73
9	Average backlash no load	°	1.4	1.6	2.0	2.0	2.4	2.4	3.0	3.0
10	Mass inertia	gcm^2	0.07	0.05	0.05	0.05	0.05	0.05	0.05	0.05
11	Gearhead length L1	mm	15.9	19.5	23.1	23.1	26.7	26.7	30.3	30.3

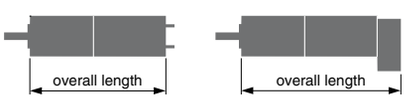

maxon Modular System

+ Motor	Page	+ Sensor/Brake	Page	Overall length [mm] = Motor length + gearhead length + (sensor/brake) + assembly parts							
A-max 22	129-132			47.9	51.5	55.1	55.1	58.7	58.7	62.3	62.3
A-max 22	130/132	MR	315/317	52.9	56.5	60.1	60.1	63.7	63.7	67.3	67.3
A-max 22	130/132	Enc 22	324	62.3	65.9	69.5	69.5	73.1	73.1	76.7	76.7
A-max 22	130/132	MEnc 13	334	55.0	58.6	62.2	62.2	65.8	65.8	69.4	69.4

Option Ball Bearing

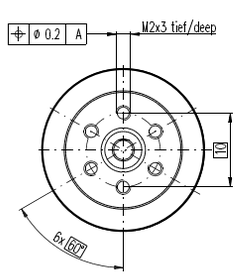

Part Numbers

4.4 : 1	144137	455 : 1	144147
5.4 : 1	144138	561 : 1	144148
19 : 1	144139	690 : 1	144149
24 : 1	144140	850 : 1	144150
29 : 1	144141	1621 : 1	144151
84 : 1	144142	1996 : 1	144152
104 : 1	144143	2458 : 1	144153
128 : 1	144144	3027 : 1	144154
157 : 1	144145	3728 : 1	144155
370 : 1	144146	4592 : 1	144156

Technical Data

Planetary Gearhead	straight teeth
Housing	steel
Output shaft	stainless steel, hardened
Bearing at output	preloaded ball bearings
Radial play, 6 mm from flange	max. 0.08 mm
Axial play at axial load	< 4 N 0 mm
	> 4 N max. 0.05 mm
Max. permissible axial load	8 N
Max. permissible force for press fits	25 N
Sense of rotation, drive to output	=
Recommended input speed	< 8000 rpm
Recommended temperature range	-15…+100°C
Extended range as option	-40…+100°C
Number of stages	1 2 3 4 5
Max. radial load, 6 mm from flange	10 N 15 N 20 N 20 N 20 N

Gearhead values according to sleeve bearing version

Planetary Gearhead GP 22 L ∅22 mm, 0.2–0.6 Nm

Plastic Version

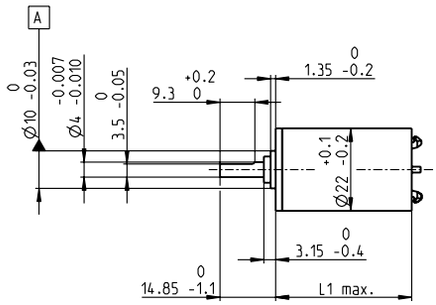

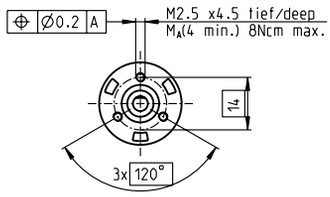

M 1:2

Technical Data

Planetary Gearhead	straight teeth
Housing	plastic
Output shaft	stainless steel, hardened
Bearing at output	sleeve bearing
Radial play, 10 mm from flange	max. 0.1 mm
Axial play	max. 0.15 mm
Max. permissible axial load	20 N
Max. permissible force for press fits	100 N
Sense of rotation, drive to output	=
Recommended input speed	< 6000 rpm
Recommended temperature range	-15...+80°C

Number of stages	1	2	3	4	5
Max. radial load, 10 mm from flange	15 N	20 N	25 N	30 N	30 N

maxon gear

Stock program
Standard program
Special program (on request)

		Part Numbers										
		232763	232766	232772	232778	232782	232788	232794	232796	232803	232809	232815
Gearhead Data												
1 Reduction		3.8:1	14:1	53:1	104:1	198:1	370:1	590:1	742:1	1386:1	1996:1	3189:1
2 Reduction absolute		15/4	225/16	3375/64	87723/845	50625/256	10556001/28561	59049/100	759375/1024	158340015/114244	285012027/142805	1594323/500
3 Max. motor shaft diameter	mm	4	4	4	3.2	4	3.2	4	4	3.2	3.2	4
Part Numbers		232764	232767	232773	232779	232783	232789	232795	232798	232804	232810	232816
1 Reduction		4.4 :1	16:1	62:1	109:1	231:1	389:1	690:1	867:1	1460:1	2102:1	3728:1
2 Reduction absolute		57/13	855/52	12825/208	2187/20	192375/832	263169/676	1121931/1625	2885625/3328	3947535/2704	7105563/3380	30292137/8125
3 Max. motor shaft diameter	mm	3.2	3.2	3.2	4	3.2	3.2	3.2	3.2	3.2	3.2	3.2
Part Numbers		232765	232768	232774	232780	232784	232790	232797	232799	232805	232811	232817
1 Reduction		5.4:1	19:1	72:1	128:1	270:1	410:1	850:1	1014:1	1538:1	2214:1	4592:1
2 Reduction absolute		27/5	3249/169	48735/676	41553/325	731025/2704	6561/16	531441/625	10965375/10816	98415/64	177147/80	14348907/3125
3 Max. motor shaft diameter	mm	2.5	3.2	3.2	3.2	3.2	4	2.5	3.2	4	4	2.5
Part Numbers			232769	232775	232781	232785	232791		232800	232806	232812	
1 Reduction			20:1	76:1	157:1	285:1	455:1		1068:1	1621:1	2458:1	
2 Reduction absolute			81/4	1215/16	19683/125	18225/64	5000211/10985		273375/256	601692057/371293	135005697/54925	
3 Max. motor shaft diameter	mm		4	4	2.5	4	3.2		4	3.2	3.2	
Part Numbers			232770	232776		232786	232792		232801	232807	232813	
1 Reduction			24:1	84:1		316:1	479:1		1185:1	1707:1	2589:1	
2 Reduction absolute			1539/65	185193/2197		2777895/8788	124659/260		41668425/35152	15000633/8788	3365793/1300	
3 Max. motor shaft diameter	mm		3.2	3.2		3.2	3.2		3.2	3.2	3.2	
Part Numbers			232771	232777		232787	232793		232802	232808	232814	
1 Reduction			29:1	89:1		333:1	561:1		1249:1	1798:1	3027:1	
2 Reduction absolute			729/25	4617/52		69255/208	2368521/4225		1038825/832	373977/208	63950067/21125	
3 Max. motor shaft diameter	mm		2.5	3.2		3.2	3.2		3.2	3.2	3.2	
4 Number of stages		1	2	3	3	4	4	4	5	5	5	5
5 Max. continuous torque	Nm	0.2	0.3	0.4	0.4	0.5	0.5	0.5	0.6	0.6	0.6	0.6
6 Intermittently permissible torque at gear output	Nm	0.3	0.4	0.5	0.5	0.7	0.7	0.7	0.8	0.8	0.8	0.8
7 Max. efficiency	%	84	70	59	59	49	49	49	42	42	42	42
8 Weight	g	28	35	43	43	51	51	51	59	59	59	59
9 Average backlash no load	°	1.0	1.2	1.6	1.6	2.0	2.0	2.0	2.0	2.0	2.0	2.0
10 Mass inertia	gcm^2	0.5	0.4	0.4	0.4	0.4	0.4	0.4	0.4	0.4	0.4	0.4
11 Gearhead length L1	mm	22.7	29.5	36.3	36.3	43.1	43.1	43.1	49.9	49.9	49.9	49.9

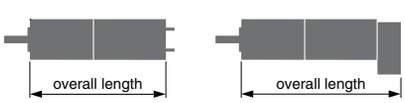

maxon Modular System

+ Motor	Page	+ Sensor/Brake	Page	Overall length [mm] = Motor length + gearhead length + (sensor/brake) + assembly parts										
A-max 22	129-132			54.7	61.5	68.3	68.3	75.1	75.1	75.1	81.9	81.9	81.9	81.9
A-max 22	130/132	MR	315/317	59.7	66.5	73.3	73.3	80.1	80.1	80.1	86.9	86.9	86.9	86.9
A-max 22	130/132	Enc 22	324	69.1	75.9	82.7	82.7	89.5	89.5	89.5	96.3	96.3	96.3	96.3
A-max 22	130/132	MEnc 13	334	61.8	68.6	75.4	75.4	82.2	82.2	82.2	89.0	89.0	89.0	89.0

Planetary Gearhead GP 22 A ∅22 mm, 0.5–1.0 Nm

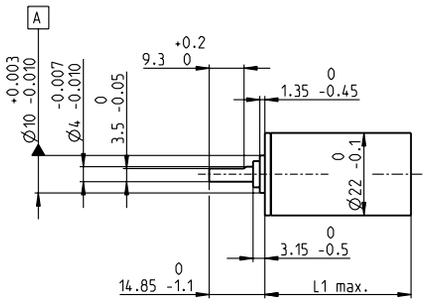

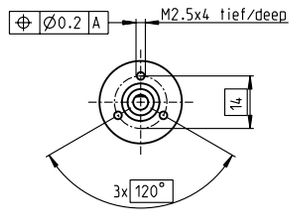

M 1:2

Technical Data

Planetary Gearhead	straight teeth
Output shaft	stainless steel, hardened
Bearing at output	ball bearing
Option	sleeve bearing
Radial play, 10 mm from flange	max. 0.2 mm
Axial play	max. 0.2 mm
Max. permissible axial load	100 N
Max. permissible force for press fits	100 N
Sense of rotation, drive to output	=
Recommended input speed	< 6000 rpm
Recommended temperature range	-40...+100°C
Number of stages	1 2 3 4 5
Max. radial load, 10 mm from flange	30 N 50 N 55 N 55 N 55 N

Stock program
Standard program
Special program (on request)

Gearhead Data

	Part Numbers		134156	134158	134163	134168	134172	110340	134183	134186	134190	134195	134203
1	Reduction		3.8:1	14:1	53:1	104:1	198:1	370:1	590:1	742:1	1386:1	1996:1	3189:1
2	Reduction absolute		15/4	225/16	3375/64	87723/845	50625/256	10556001/28561	59049/100	759375/1024	158340015/114244	285012027/142805	1594323/500
3	Max. motor shaft diameter	mm	4	4	4	3.2	4	3.2	4	4	3.2	3.2	4
	Part Numbers		110337	134159	134164	134169	134173	134178	134184	134187	134193	134198	134204
1	Reduction		4.4 :1	16:1	62:1	109:1	231:1	389:1	690:1	867:1	1460:1	2102:1	3728:1
2	Reduction absolute		57/13	855/52	12825/208	2187/20	192375/832	263169/676	1121931/1625	2885625/3328	3947535/2704	7105563/3380	30292137/8125
3	Max. motor shaft diameter	mm	3.2	3.2	3.2	4	3.2	3.2	3.2	3.2	3.2	3.2	3.2
	Part Numbers		134157	110338	134165	134170	134174	134180	134185	134188	134196	134200	134205
1	Reduction		5.4:1	19:1	72:1	128:1	270:1	410:1	850:1	1014:1	1538:1	2214:1	4592:1
2	Reduction absolute		27/5	3249/169	48735/676	41553/325	731025/2704	6561/16	531441/625	10965375/10816	98415/64	177147/80	14348907/3125
3	Max. motor shaft diameter	mm	2.5	3.2	3.2	3.2	3.2	4	2.5	3.2	4	4	2.5
	Part Numbers			134160	134166	134171	134176	134179		134191	110341	134199	
1	Reduction			20:1	76:1	157:1	285:1	455:1		1068:1	1621:1	2458:1	
2	Reduction absolute			81/4	1215/16	19683/125	18225/64	5000211/10985		273375/256	60169257/371293	135005697/54925	
3	Max. motor shaft diameter	mm		4	4	2.5	4	3.2		4	3.2	3.2	
	Part Numbers			134161	110339		134175	134181		134189	134194	134201	
1	Reduction			24:1	84:1		316:1	479:1		1185:1	1707:1	2589:1	
2	Reduction absolute			1539/65	185193/2197		2777895/8788	124659/260		41668425/35152	150006633/8788	3365793/1300	
3	Max. motor shaft diameter	mm		3.2	3.2		3.2	3.2		3.2	3.2	3.2	
	Part Numbers			134162	134167		134177	134182		134192	134197	134202	
1	Reduction			29:1	89:1		333:1	561:1		1249:1	1798:1	3027:1	
2	Reduction absolute			729/25	4617/52		69255/208	2368521/4225		1038825/832	373977/208	63950067/21125	
3	Max. motor shaft diameter	mm		2.5	3.2		3.2	3.2		3.2	3.2	3.2	
4	Number of stages		1	2	3	3	4	4	4	5	5	5	5
5	Max. continuous torque	Nm	0.5	0.5	0.8	0.8	1.0	1.0	1.0	1.0	1.0	1.0	1.0
6	Intermittently permissible torque at gear output	Nm	0.8	0.8	1.2	1.2	1.6	1.6	1.6	1.6	1.6	1.6	1.6
7	Max. efficiency	%	84	70	59	59	49	49	49	42	42	42	42
8	Weight	g	42	55	68	68	81	81	81	94	94	94	94
9	Average backlash no load	°	1.0	1.2	1.6	1.6	2.0	2.0	2.0	2.0	2.0	2.0	2.0
10	Mass inertia	gcm^2	0.5	0.4	0.4	0.4	0.4	0.4	0.4	0.4	0.4	0.4	0.4
11	Gearhead length L1*	mm	22.6	29.4	36.2	36.2	43.0	43.0	43.0	49.8	49.8	49.8	49.8

*for EC 32fl. L1 is + 7.1 mm

maxon Modular System

+ Motor	Page	+ Sensor/Brake	Page	Overall length [mm] = Motor length + gearhead length + (sensor/brake) + assembly parts										
A-max 19	125/126			51.6	58.4	65.2	65.2	72.0	72.0	72.0	78.8	78.8	78.8	78.8
A-max 19, 1.5 W	126	MR	315/317	56.7	63.5	70.3	70.3	77.1	77.1	77.1	83.9	83.9	83.9	83.9
A-max 19, 1.5 W	126	Enc 22	324	66.0	72.8	79.6	79.6	86.4	86.4	86.4	93.2	93.2	93.2	93.2
A-max 19, 1.5 W	126	MEnc 13	334	59.1	65.9	72.7	72.7	79.5	79.5	79.5	86.3	86.3	86.3	86.3
A-max 19, 2.5 W	127/128			54.2	61.0	67.8	67.8	74.6	74.6	74.6	81.4	81.4	81.4	81.4
A-max 19, 2.5 W	128	MR	315/317	58.5	65.3	72.1	72.1	78.9	78.9	78.9	85.7	85.7	85.7	85.7
A-max 19, 2.5 W	128	Enc 22	324	68.6	75.4	82.2	82.2	89.0	89.0	89.0	95.8	95.8	95.8	95.8
A-max 19, 2.5 W	128	MEnc 13	334	61.7	68.5	75.3	75.3	82.1	82.1	82.1	88.9	88.9	88.9	88.9
A-max 22	129-132			54.6	61.4	68.2	68.2	75.0	75.0	75.0	81.8	81.8	81.8	81.8
A-max 22	130/132	MR	315/317	59.6	66.4	73.2	73.2	80.0	80.0	80.0	86.8	86.8	86.8	86.8
A-max 22	130/132	Enc 22	324	69.0	75.8	82.6	82.6	89.4	89.4	89.4	96.2	96.2	96.2	96.2
A-max 22	130/132	MEnc 13	334	61.7	68.5	75.3	75.3	82.1	82.1	82.1	88.9	88.9	88.9	88.9
RE-max 21	155/156			51.6	58.4	65.2	65.2	72.0	72.0	72.0	78.8	78.8	78.8	78.8
RE-max 21, 3.5 W	156	MR	316/318	56.7	63.5	70.3	70.3	77.1	77.1	77.1	83.9	83.9	83.9	83.9
RE-max 21, 6 W	157/158			54.2	61.0	67.8	67.8	74.6	74.6	74.6	81.4	81.4	81.4	81.4
RE-max 21, 6 W	158	MR	316/318	58.5	65.3	72.1	72.1	78.9	78.9	78.9	85.7	85.7	85.7	85.7
EC 16, 30 W	178			65.5	72.3	79.1	79.1	85.9	85.9	85.9	92.7	92.7	92.7	92.7
EC 16, 30 W	178	MR	318	76.2	83	89.8	89.8	96.6	96.6	96.6	103.4	103.4	103.4	103.4
EC 16, 60 W	180			81.5	88.3	95.1	95.1	101.9	101.9	101.9	108.7	108.7	108.7	108.7
EC 16, 60 W	180	MR	318	92.2	99.0	105.8	105.8	112.6	112.6	112.6	119.4	119.4	119.4	119.4
EC 20 flat, 3 W, A	221			33.1	39.9	46.7	46.7	53.5	53.5	53.5	60.3	60.3	60.3	60.3
EC 20 flat, 3 W, B	221			32.5	39.3	46.1	46.1	52.9	52.9	52.9	59.7	59.7	59.7	59.7
EC 20 flat, 5 W	222			36.7	43.5	50.3	50.3	57.1	57.1	57.1	63.9	63.9	63.9	63.9
EC 20 flat, IE, IP 00	223			39.7	46.5	53.3	53.3	60.1	60.1	60.1	66.9	66.9	66.9	66.9
EC 20 flat, IE, IP 40	223			40.8	47.6	54.4	54.4	61.2	61.2	61.2	68.0	68.0	68.0	68.0
EC 20 flat, IE, IP 00	224			43.7	50.5	57.3	57.3	64.1	64.1	64.1	70.9	70.9	70.9	70.9
EC 20 flat, IE, IP 40	224			44.8	51.6	58.4	58.4	65.2	65.2	65.2	72.0	72.0	72.0	72.0
EC 32 flat, 6 W	225			39.8	46.6	53.4	53.4	60.2	60.2	60.2	67.0	67.0	67.0	67.0

Planetary Gearhead GP 22 AR ∅22 mm, 0.50 Nm

NEW

for high radial loads

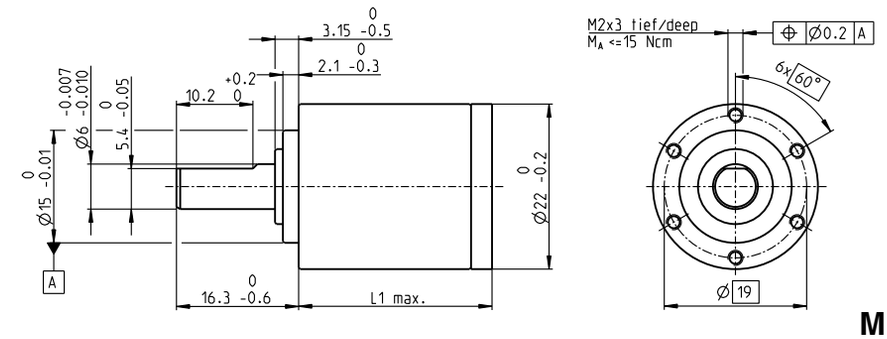

M 1:1

Technical Data

Planetary Gearhead	straight teeth
Output shaft	stainless steel
Bearing at output	ball bearing
Radial play, 10 mm from flange	max. 0.2 mm
Axial play	max. 0.1 mm
Max. permissible axial load	100 N
Max. permissible force for press fits	100 N
Sense of rotation, drive to output	=
Recommended input speed	< 6000 rpm
Recommended temperature range	-30…+100°C
Max. radial load, 10 mm from flange	70 N

Stock program
Standard program
Special program (on request)

Part Numbers

Gearhead Data		462695	438992	462696
1 Reduction		3.8:1	4.4:1	5.4:1
2 Reduction absolute		15/4	57/13	27/5
3 Max. motor shaft diameter	mm	4	3.2	2.5
4 Number of stages		1	1	1
5 Max. continuous torque	Nm	0.5	0.5	0.5
6 Intermittently permissible torque at gear output	Nm	0.8	0.8	0.8
7 Max. efficiency	%	90	90	90
8 Weight	g	44	44	44
9 Average backlash no load	°	1.0	1.0	1.0
10 Mass inertia	gcm^2	0.5	0.38	0.25
11 Gearhead length L1	mm	25.8	25.8	25.8

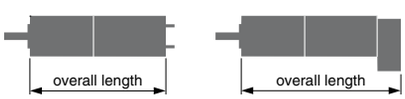

maxon Modular System

+ Motor	Page	+ Sensor/Brake	Page	Overall length [mm] = Motor length + gearhead length + (sensor/brake) + assembly parts		
RE 25, 20 W	108			68.9	68.9	68.9
RE 25, 20 W	108	MR	319	79.9	79.9	79.9
RE 25, 20 W	108	HED_ 5540	326/329	89.7	89.7	89.7
RE 25, 20 W	108	DCT22	336	91.2	91.2	91.2
RE 25, 20 W	108	AB 28	372	103	103	103
RE 25, 20 W	108	HED_ 5540/AB 28	326/372	120.2	120.2	120.2
EC-max 22, 25 W	203			74.4	74.4	74.4
EC-max 22, 25 W	203	MR	318	84	84	84
EC-max 22, 25 W	203	AB 20	370	110	110	110

Planetary Gearhead GP 22 C ∅22 mm, 0.5–2.0 Nm

Ceramic Version

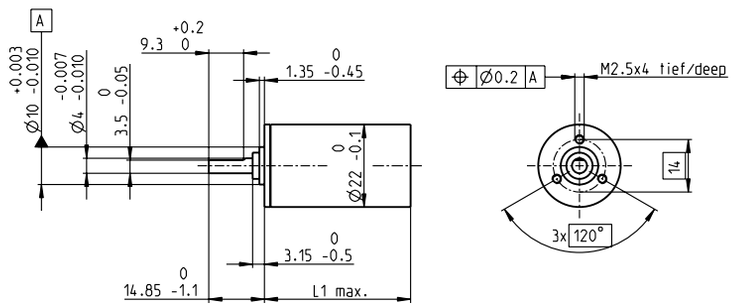

M 1:2

Technical Data

Planetary Gearhead	straight teeth
Output shaft	stainless steel, hardened
Bearing at output	ball bearing
Radial play, 10 mm from flange	max. 0.2 mm
Axial play	max. 0.2 mm
Max. permissible axial load	100 N
Max. permissible force for press fits	100 N
Sense of rotation, drive to output	=
Recommended input speed	< 8000 rpm
Recommended temperature range	-40...+100°C
Number of stages	1 2 3 4 5
Max. radial load, 10 mm from flange	30 N 50 N 55 N 55 N 55 N

Stock program
Standard program
Special program (on request)

Gearhead Data													
		Part Numbers	143971	143974	143980	143986	143990	143996	144002	144004	144011	144017	144023
1	Reduction		3.8:1	14:1	53:1	104:1	198:1	370:1	590:1	742:1	1386:1	1996:1	3189:1
2	Reduction absolute		15/4	225/16	3375/64	87723/845	50625/256	10556001/28561	59049/100	759375/1024	158340015/114244	285012027/142805	1594323/500
3	Max. motor shaft diameter	mm	4	4	4	3.2	4	3.2	4	4	3.2	3.2	4
		Part Numbers	143972	143975	143981	143987	143991	143997	144003	144006	144012	144018	144024
1	Reduction		4.4 :1	16:1	62:1	109:1	231:1	389:1	690:1	867:1	1460:1	2102:1	3728:1
2	Reduction absolute		57/13	855/52	12825/208	2187/20	192375/832	263169/676	1121931/1625	2885625/3328	3947535/2704	7105563/3380	30292137/8125
3	Max. motor shaft diameter	mm	3.2	3.2	3.2	4	3.2	3.2	3.2	3.2	3.2	3.2	3.2
		Part Numbers	143973	143976	143982	143988	143992	143998	144005	144007	144013	144019	144025
1	Reduction		5.4:1	19:1	72:1	128:1	270:1	410:1	850:1	1014:1	1538:1	2214:1	4592:1
2	Reduction absolute		27/5	3249/169	48735/676	41553/325	731025/2704	6561/16	531441/625	10965375/10816	98415/64	177147/80	14348907/3125
3	Max. motor shaft diameter	mm	2.5	3.2	3.2	3.2	3.2	4	2.5	3.2	4	4	2.5
		Part Numbers		143977	143983	143989	143993	143999		144008	144014	144020	
1	Reduction			20:1	76:1	157:1	285:1	455:1		1068:1	1621:1	2458:1	
2	Reduction absolute			81/4	1215/16	19683/125	18225/64	5000211/10985		273375/256	60169205/371293	135005697/54925	
3	Max. motor shaft diameter	mm		4	4	2.5	4	3.2		4	3.2	3.2	
		Part Numbers		143978	143984		143994	144000		144009	144015	144021	
1	Reduction			24:1	84:1		316:1	479:1		1185:1	1707:1	2589:1	
2	Reduction absolute			1539/65	185193/2197		2777895/8788	124659/260		41668425/35152	15000633/8788	3365793/1300	
3	Max. motor shaft diameter	mm		3.2	3.2		3.2	3.2		3.2	3.2	3.2	
		Part Numbers		143979	143985		143995	144001		144010	144016	144022	
1	Reduction			29:1	89:1		333:1	561:1		1249:1	1798:1	3027:1	
2	Reduction absolute			729/25	4617/52		69255/208	2368521/4225		1038825/832	373977/208	63950067/21125	
3	Max. motor shaft diameter	mm		2.5	3.2		3.2	3.2		3.2	3.2	3.2	
4	Number of stages		1	2	3	3	4	4	4	5	5	5	5
5	Max. continuous torque	Nm	0.5	0.6	1.2	1.2	1.8	1.8	1.8	2.0	2.0	2.0	2.0
6	Intermittently permissible torque at gear output	Nm	0.8	0.9	1.9	1.9	2.7	2.7	2.7	3.0	3.0	3.0	3.0
7	Max. efficiency	%	84	70	59	59	49	49	49	42	42	42	42
8	Weight	g	42	55	68	68	81	81	81	94	94	94	94
9	Average backlash no load	°	1.0	1.2	1.6	1.6	2.0	2.0	2.0	2.0	2.0	2.0	2.0
10	Mass inertia	gcm^2	0.5	0.4	0.4	0.4	0.4	0.4	0.4	0.4	0.4	0.4	0.4
11	Gearhead length L1*	mm	25.4	32.2	39.0	39.0	45.8	45.8	45.8	52.6	52.6	52.6	52.6

*L1 is–2.8 mm for calculating the overall length

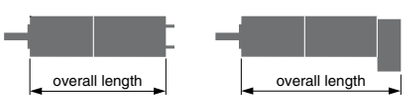

maxon Modular System

+ Motor	Page	+ Sensor/Brake	Page	Overall length [mm] = Motor length + gearhead length + (sensor/brake) + assembly parts										
A-max 19	125/126			51.6	58.4	65.2	65.2	72.0	72.0	72.0	78.8	78.8	78.8	78.8
A-max 19, 1.5 W	126	MR	315/317	56.7	63.5	70.3	70.3	77.1	77.1	77.1	83.9	83.9	83.9	83.9
A-max 19, 1.5 W	126	Enc 22	324	66.0	72.8	79.6	79.6	86.4	86.4	86.4	93.2	93.2	93.2	93.2
A-max 19, 1.5 W	126	MEnc 13	334	59.1	65.9	72.7	72.7	79.5	79.5	79.5	86.3	86.3	86.3	86.3
A-max 19, 2.5 W	127/128			54.2	61.0	67.8	67.8	74.6	74.6	74.6	81.4	81.4	81.4	81.4
A-max 19, 2.5 W	128	MR	315/317	58.5	65.3	72.1	72.1	78.9	78.9	78.9	85.7	85.7	85.7	85.7
A-max 19, 2.5 W	128	Enc 22	324	68.6	75.4	82.2	82.2	89.0	89.0	89.0	95.8	95.8	95.8	95.8
A-max 19, 2.5 W	128	MEnc 13	334	61.7	68.5	75.3	75.3	82.1	82.1	82.1	88.9	88.9	88.9	88.9
A-max 22	129-132			54.6	61.4	68.2	68.2	75.0	75.0	75.0	81.8	81.8	81.8	81.8
A-max 22	130/132	MR	315/317	59.6	66.4	73.2	73.2	80.0	80.0	80.0	86.8	86.8	86.8	86.8
A-max 22	130/132	Enc 22	324	69.0	75.8	82.6	82.6	89.4	89.4	89.4	96.2	96.2	96.2	96.2
A-max 22	130/132	MEnc 13	334	61.7	68.5	75.3	75.3	82.1	82.1	82.1	88.9	88.9	88.9	88.9
RE-max 21	155/156			51.6	58.4	65.2	65.2	72.0	72.0	72.0	78.8	78.8	78.8	78.8
RE-max 21, 3.5 W	156	MR	315/318	56.7	63.5	70.3	70.3	77.1	77.1	77.1	83.9	83.9	83.9	83.9
RE-max 21	157/158			54.2	61.0	67.8	67.8	74.6	74.6	74.6	81.4	81.4	81.4	81.4
RE-max 21, 6 W	158	MR	315/318	58.5	65.3	72.1	72.1	78.9	78.9	78.9	85.7	85.7	85.7	85.7
RE-max 24	159-162			54.6	61.4	68.2	68.2	75.0	75.0	75.0	81.8	81.8	81.8	81.8
RE-max 24	160/162	MR	316/318	59.6	66.4	73.2	73.2	80.0	80.0	80.0	86.8	86.8	86.8	86.8

Planetary Gearhead GP 22 C ∅22 mm, 0.5–2.0 Nm

Ceramic Version

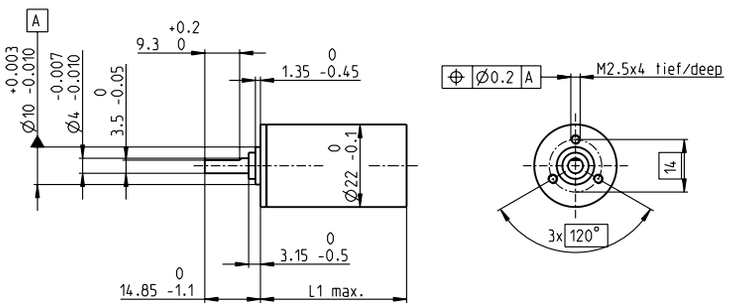

M 1:2

Technical Data

Planetary Gearhead	straight teeth
Output shaft	stainless steel, hardened
Bearing at output	ball bearing
Radial play, 10 mm from flange	max. 0.2 mm
Axial play	max. 0.2 mm
Max. permissible axial load	100 N
Max. permissible force for press fits	100 N
Sense of rotation, drive to output	=
Recommended input speed	< 8000 rpm
Recommended temperature range	-40…+100°C
Number of stages	1 2 3 4 5
Max. radial load, 10 mm from flange	30 N 50 N 55 N 55 N 55 N

Stock program
Standard program
Special program (on request)

Gearhead Data		Part Numbers										
		143971	143974	143980	143986	143990	143996	144002	144004	144011	144017	144023
1 Reduction		3.8:1	14:1	53:1	104:1	198:1	370:1	590:1	742:1	1386:1	1996:1	3189:1
2 Reduction absolute		15/4	225/16	3375/64	87723/845	50625/256	10556001/28561	59049/100	759375/1024	158340015/114244	285012027/142805	1594323/500
3 Max. motor shaft diameter	mm	4	4	4	3.2	4	3.2	4	4	3.2	3.2	4
Part Numbers		143972	143975	143981	143987	143991	143997	144003	144006	144012	144018	144024
1 Reduction		4.4:1	16:1	62:1	109:1	231:1	389:1	690:1	867:1	1460:1	2102:1	3728:1
2 Reduction absolute		57/13	855/52	12825/208	2187/20	192375/832	263169/676	1121931/1625	2885625/3328	3947535/2704	7105563/3380	30292137/8125
3 Max. motor shaft diameter	mm	3.2	3.2	3.2	4	3.2	3.2	3.2	3.2	3.2	3.2	3.2
Part Numbers		143973	143976	143982	143988	143992	143998	144005	144007	144013	144019	144025
1 Reduction		5.4:1	19:1	72:1	128:1	270:1	410:1	850:1	1014:1	1538:1	2214:1	4592:1
2 Reduction absolute		27/5	3249/169	48735/676	41553/325	731025/2704	6561/16	531441/625	10965375/10816	98415/64	177147/80	14348907/3125
3 Max. motor shaft diameter	mm	2.5	3.2	3.2	3.2	3.2	4	2.5	3.2	4	4	2.5
Part Numbers			143977	143983	143989	143993	143999		144008	144014	144020	
1 Reduction			20:1	76:1	157:1	285:1	455:1		1068:1	1621:1	2458:1	
2 Reduction absolute			81/4	1215/16	19683/125	18225/64	5000211/10985		273375/256	601692057/371293	135005697/54925	
3 Max. motor shaft diameter	mm		4	4	2.5	4	3.2		4	3.2	3.2	
Part Numbers			143978	143984		143994	144000		144009	144015	144021	
1 Reduction			24:1	84:1		316:1	479:1		1185:1	1707:1	2589:1	
2 Reduction absolute			1539/65	185193/2197		2777895/8788	124659/260		41668425/35152	15000633/8788	3365793/1300	
3 Max. motor shaft diameter	mm		3.2	3.2		3.2	3.2		3.2	3.2	3.2	
Part Numbers			143979	143985		143995	144001		144010	144016	144022	
1 Reduction			29:1	89:1		333:1	561:1		1249:1	1798:1	3027:1	
2 Reduction absolute			729/25	4617/52		69255/208	2368521/4225		1038825/832	373977/208	63950067/21125	
3 Max. motor shaft diameter	mm		2.5	3.2		3.2	3.2		3.2	3.2	3.2	
4 Number of stages		1	2	3	3	4	4	4	5	5	5	5
5 Max. continuous torque	Nm	0.5	0.6	1.2	1.2	1.8	1.8	1.8	2.0	2.0	2.0	2.0
6 Intermittently permissible torque at gear output	Nm	0.8	0.9	1.9	1.9	2.7	2.7	2.7	3.0	3.0	3.0	3.0
7 Max. efficiency	%	84	70	59	59	49	49	49	42	42	42	42
8 Weight	g	42	55	68	68	81	81	81	94	94	94	94
9 Average backlash no load	°	1.0	1.2	1.6	1.6	2.0	2.0	2.0	2.0	2.0	2.0	2.0
10 Mass inertia	gcm^2	0.5	0.4	0.4	0.4	0.4	0.4	0.4	0.4	0.4	0.4	0.4
11 Gearhead length L1*	mm	25.4	32.2	39.0	39.0	45.8	45.8	45.8	52.6	52.6	52.6	52.6

*for EC-max 16 L1 is–2.8 mm

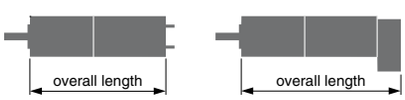

maxon Modular System

+ Motor	Page	+ Sensor/Brake	Page	Overall length [mm] = Motor length + gearhead length + (sensor/brake) + assembly parts										
EC 16, 60 W	180			81.5	88.3	95.1	95.1	101.9	101.9	101.9	108.7	108.7	108.7	108.7
EC 16, 60 W	180	MR	318	92.2	99.0	105.8	105.8	112.6	112.6	112.6	119.4	119.4	119.4	119.4
EC 22, 40 W	185			70.0	76.8	83.6	83.6	90.4	90.4	90.4	97.2	97.2	97.2	97.2
EC 22, 40 W	185	MR	318	76.0	82.8	89.6	89.6	96.4	96.4	96.4	103.2	103.2	103.2	103.2
EC 22, 100 W	187			88.2	95.0	101.8	101.8	108.6	108.6	108.6	115.4	115.4	115.4	115.4
EC 22, 100 W	187	MR	318	94.2	101.0	107.8	107.8	114.6	114.6	114.6	121.4	121.4	121.4	121.4
EC-max 16, 8 W	201			58.7	65.5	72.3	72.3	79.1	79.1	79.1	85.9	85.9	85.9	85.9
EC-max 16, 8 W	201	MR	318	66.0	72.8	79.6	79.6	86.4	86.4	86.4	93.2	93.2	93.2	93.2
EC-max 22, 12 W	202			57.5	64.3	71.1	71.1	77.9	77.9	77.9	84.7	84.7	84.7	84.7
EC-max 22, 12 W	202	MR	318	67.2	74.0	80.8	80.8	87.6	87.6	87.6	94.4	94.4	94.4	94.4
EC-max 22, 12 W	202	AB 20	370	93.1	99.9	106.7	106.7	113.5	113.5	113.5	120.3	120.3	120.3	120.3
EC 20 flat, 3 W, A	221			33.1	39.9	46.7	46.7	53.5	53.5	53.5	60.3	60.3	60.3	60.3
EC 20 flat, 3 W, B	221			32.5	39.3	46.1	46.1	52.9	52.9	52.9	59.7	59.7	59.7	59.7
EC 20 flat, 5 W	222			36.7	43.5	50.3	50.3	57.1	57.1	57.1	63.9	63.9	63.9	63.9
EC 20 flat, IE, IP 00	223			39.7	46.5	53.3	53.3	60.1	60.1	60.1	66.9	66.9	66.9	66.9
EC 20 flat, IE, IP 40	223			40.8	47.6	54.4	54.4	61.2	61.2	61.2	68.0	68.0	68.0	68.0
EC 20 flat, IE, IP 00	224			43.7	50.5	57.3	57.3	64.1	64.1	64.1	70.9	70.9	70.9	70.9
EC 20 flat, IE, IP 40	224			44.8	51.6	58.4	58.4	65.2	65.2	65.2	72.0	72.0	72.0	72.0
EC 32 flat, 6 W	225			39.8	46.6	53.4	53.4	60.2	60.2	60.2	67.0	67.0	67.0	67.0

Planetary Gearhead GP 22 HP ∅22 mm, 2.0–3.4 Nm

High Power

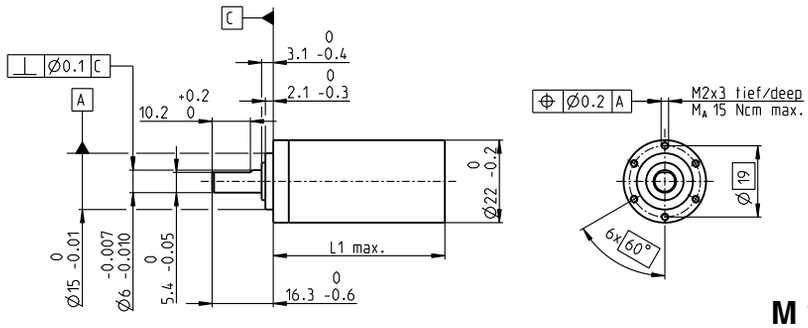

M 1:2

Technical Data

Planetary Gearhead				straight teeth
Output shaft				stainless steel, hardened
Bearing at output				ball bearing
Radial play, 10 mm from flange				max. 0.2 mm
Axial play				max. 0.1 mm
Max. permissible axial load				100 N
Max. permissible force for press fits				100 N
Sense of rotation, drive to output				=
Recommended input speed				< 12000 rpm
Recommended temperature range				-30…+100°C
Extended range as option				-40…+100°C
Number of stages	1	2	3	4
Max. radial load, 10 mm from flange	55 N	85 N	100 N	110 N

Stock program
Standard program
Special program (on request)

			Part Numbers									
			370683	370687	370690	**370776**	370780	370783	370792	370797	370802	370807
Gearhead Data (provisional)												
1	Reduction		3.8:1	14:1	20:1	53:1	76:1	104:1	198:1	316:1	410:1	590:1
2	Reduction absolute		15/4	225/16	81/4	3375/64	1215/16	87723/845	50625/256	2777895/8788	6561/16	59049/100
3	Max. motor shaft diameter	mm	4	4	4	4	4	3.2	4	3.2	4	4
	Part Numbers		370685	370688	370691	370778	370781	370784	370794	370799	370803	370808
1	Reduction		4.4:1	16:1	24:1	62:1	84:1	109:1	231:1	333:1	455:1	690:1
2	Reduction absolute		57/13	855/52	1539/65	12825/208	185193/2197	2187/20	192375/832	69255/208	5000211/10985	1121931/1625
3	Max. motor shaft diameter	mm	3.2	3.2	3.2	3.2	3.2	4	3.2	3.2	3.2	3.2
	Part Numbers		370686	**370689**	370692	370779	370782	**370785**	370795	**370800**	370805	370809
1	Reduction		5.4:1	19:1	29:1	72:1	89:1	128:1	270:1	370:1	479:1	850:1
2	Reduction absolute		27/5	3249/169	729/25	48735/676	4617/52	41553/325	731025/2704	10556001/28561	124659/260	531441/625
3	Max. motor shaft diameter	mm	2.5	3.2	2.5	3.2	3.2	3.2	3.2	3.2	3.2	2.5
	Part Numbers							370786	370796	370801	370806	
1	Reduction							157:1	285:1	389:1	561:1	
2	Reduction absolute							19683/125	18225/64	263169/676	2368521/4225	
3	Max. motor shaft diameter	mm						2.5	4	3.2	3.2	
4	Number of stages		1	2	2	3	3	3	4	4	4	4
5	Max. continuous torque	Nm	2	2.4	2.4	3	3	3	3.4	3.4	3.4	3.4
6	Intermittently permissible torque at gear output	Nm	2.5	3	3	3.5	3.5	3.5	3.8	3.8	3.8	3.8
7	Max. efficiency	%	84	70	70	59	59	59	49	49	49	49
8	Weight	g	51	64	64	78	78	78	91	91	91	91
9	Average backlash no load	°	1.0	1.2	1.2	1.6	1.6	1.6	2.0	2.0	2.0	2.0
10	Mass inertia	gcm^2	0.6	0.4	0.4	0.4	0.4	0.4	0.4	0.4	0.4	0.4
11	Gearhead length L1	mm	25.3	32.3	32.3	39.0	39.0	39.0	45.7	45.7	45.7	45.7

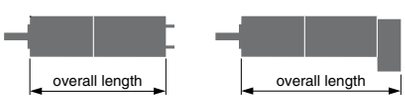

maxon Modular System

+ Motor	Page	+ Sensor/Brake	Page	**Overall length [mm]** = Motor length + gearhead length + (sensor/brake) + assembly parts									
EC 22, 40 W	185			69.9	76.9	76.9	83.6	83.6	83.6	90.3	90.3	90.3	90.3
EC 22, 40 W	185	MR	318	75.9	82.9	82.9	89.6	89.6	89.6	96.3	96.3	96.3	96.3
EC 22, 100 W	187			88.1	95.1	95.1	101.8	101.8	101.8	108.5	108.5	108.5	108.5
EC 22, 100 W	187	MR	318	94.1	101.1	101.1	107.8	107.8	107.8	114.5	114.5	114.5	114.5
EC-max 22, 12 W	202			57.4	64.4	64.4	71.1	71.1	71.1	77.8	77.8	77.8	77.8
EC-max 22, 12 W	202	MR	318	67.0	74.0	74.0	80.7	80.7	80.7	87.4	87.4	87.4	87.4
EC-max 22, 12 W	202	AB 20	370	93.0	100.0	100.0	106.7	106.7	106.7	113.4	113.4	113.4	113.4
EC-max 22, 25 W	203			73.9	80.9	80.9	87.6	87.6	87.6	94.3	94.3	94.3	94.3
EC-max 22, 25 W	203	MR	318	83.5	90.5	90.5	97.2	97.2	97.2	103.9	103.9	103.9	103.9
EC-max 22, 25 W	203	AB 20	370	109.5	116.5	116.5	123.2	123.2	123.2	129.9	129.9	129.9	129.9
EC-4pole 22, 90 W	211			74.0	81.0	81.0	87.7	87.7	87.7	94.4	94.4	94.4	94.4
EC-4pole 22, 90 W	211	HEDL 5540	329	95.5	102.5	102.5	109.2	109.2	109.2	115.9	115.9	115.9	115.9
EC-4pole 22, 120 W	212			91.4	98.4	98.4	105.1	105.1	105.1	111.8	111.8	111.8	111.8
EC-4pole 22, 120 W	212	HEDL 5540	329	112.9	119.9	119.9	126.6	126.6	126.6	133.3	133.3	133.3	133.3

Planetary Gearhead GP 22 HD ∅22 mm, 2.0–4.0 Nm

Heavy Duty – for application in oil

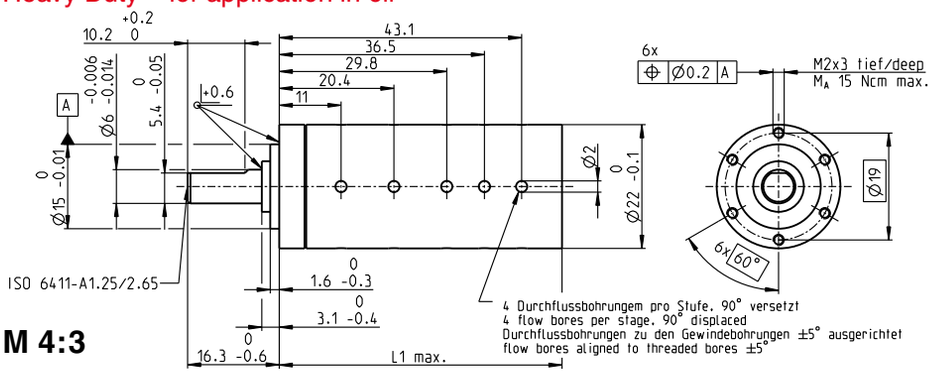

M 4:3

Technical Data

Planetary Gearhead	straight teeth
Output shaft	stainless steel, hardened
Bearing at output	ball bearing
Radial play, 10 mm from flange	max. 0.2 mm
Axial play	max. 0.1 mm
Max. permissible axial load	100 N
Max. permissible force for press fits	100 N
Sense of rotation, drive to output	=
Recommended input speed	< 11'000 rpm
Recommended temperature range	-55...+200°C
Extended range as option	-55...+260°C

Number of stages	1	2	3	4	5
Max. radial load, 10 mm from flange	55 N	85 N	100 N	110 N	110 N

Stock program
Standard program
Special program (on request)

Part Numbers	410657	410637	410558	416698	409667	416709	416738	416211	416747	416753	416760
Gearhead Data (provisional)											
1 Reduction	3.8:1	14:1	53:1	104:1	198:1	370:1	561:1	742:1	1386:1	1798:1	3027:1
2 Reduction absolute	15/4	225/16	3375/64	87723/845	50625/256	10556001/28561	2368521/4225	759375/1024	158340015/114244	373977/208	63950067/21125
3 Max. motor shaft diameter mm	4	4	4	3.2	4	3.2	3.2	4	3.2	3.2	3.2
Part Numbers	416684	416686	416693	416699	416703	416710	416739	416742	416748	416754	416762
1 Reduction	4.4:1	16:1	62:1	109:1	231:1	389:1	590:1	867:1	1460:1	1996:1	3189:1
2 Reduction absolute	57/13	855/52	12825/208	2187/20	192375/832	263169/676	59049/100	2885625/3328	3947535/2704	285012027/142805	1594323/500
3 Max. motor shaft diameter mm	3.2	3.2	3.2	4	3.2	3.2	4	3.2	3.2	3.2	4
Part Numbers		416687	416694	416701	416704	416711	416740	416743	416749	416756	416763
1 Reduction		19:1	72:1	128:1	270:1	410:1	690:1	1014:1	1538:1	2102:1	3728:1
2 Reduction absolute		3249/169	48735/676	41553/325	731025/2704	6561/16	1121931/1625	10965375/10816	98415/64	7105563/3380	30292137/8125
3 Max. motor shaft diameter mm		3.2	3.2	3.2	3.2	4	3.2	3.2	4.0	3.2	3.2
Part Numbers		416688	416695		416706	416736		416744	416751	416757	
1 Reduction		20:1	76:1		285:1	455:1		1068:1	1621:1	2214:1	
2 Reduction absolute		81/4	1215/16		18225/64	5000211/10985		273375/256	601692057/371293	177147/80	
3 Max. motor shaft diameter mm		4	4		4	3.2		4	3.2	4	
Part Numbers		416689	416696		416707	416737		416745	416752	416758	
1 Reduction		24:1	84:1		316:1	479:1		1185:1	1707:1	2458:1	
2 Reduction absolute		1539/65	185193/2197		2777895/8788	124659/260		41668425/35152	150006633/8788	135005697/54925	
3 Max. motor shaft diameter mm		3.2	3.2		3.2	3.2		3.2	3.2	3.2	
Part Numbers			416697		416708			416746		416759	
1 Reduction			89:1		333:1			1249:1		2589:1	
2 Reduction absolute			4617/52		69255/208			1038825/832		3365793/1300	
3 Max. motor shaft diameter mm			3.2		3.2			3.2		3.2	
4 Number of stages	1	2	3	3	4	4	4	5	5	5	5
5 Max. continuous torque Nm	2	2.4	3	3	3.4	3.4	3.4	4	4	4	4
6 Intermittently permissible torque at gear output Nm	2.5	3	3.5	3.5	3.8	3.8	3.8	4.4	4.4	4.4	4.4
15 Max. overload torque[1] Nm	6	9	12	12	12	12	12	12	12	12	12
7 Max. efficiency %	95	87	78	78	65	65	65	52	52	52	52
8 Weight g	46	65	82	82	96	96	96	110	110	110	110
9 Average backlash no load °	1.0	1.2	1.6	1.6	2.0	2.0	2.0	2.5	2.5	2.5	2.5
10 Mass inertia gcm^2	0.6	0.4	0.4	0.4	0.4	0.4	0.4	0.4	0.4	0.4	0.4
11 Gearhead length L1 mm	20.6	29.7	38.2	38.2	45.0	45.0	45.0	51.8	51.8	51.8	51.8
13 Max. transmittable continuous power W	160	100	40	40	20	20	20	6	6	6	6
14 Max. transmittable intermittent power W	240	150	60	60	30	30	30	9	9	9	9

1) Reduced expected life span

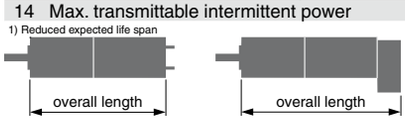

maxon Modular System

+ Motor	Page	+ Sensor/Brake	Page	Overall length [mm] = Motor length + gearhead length + (sensor/brake) + assembly parts										
EC 22, 240 W, A	190			110.5	119.5	128.0	128.0	135.0	135.0	135.0	141.5	141.5	141.5	141.5
EC 22, 240 W, B	190			98.1	107.5	116.0	116.0	122.4	122.4	122.4	129.5	129.5	129.5	129.5

Application

General
- extreme temperature applications
- vibration tested according to MIL-STD810F/ Jan2000 Fig. 514.5C-10
- operation in oil and high pressure

Oil & Gas Industry
- oil, gas and geothermal wells

Important Notice

This gearhead has been designed for applications in oil and is only equipped with minimum lubrication. Therefore it is not permitted to use it under normal air conditions.

Planetary Gearhead GP 22 M ∅22 mm, 0.5–2.0 Nm

Sterilizable

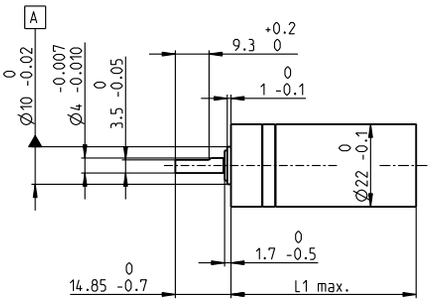

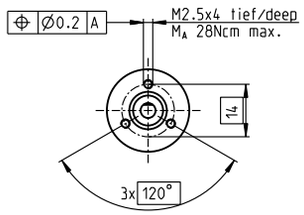

M 1:2

Technical Data

Planetary Gearhead					straight teeth
Output shaft					stainless steel, hardened
Bearing at output					ball bearing
Radial play, 10 mm from flange					max. 0.12 mm
Axial play					max. 0.05 mm
Max. permissible axial load					100 N
Max. permissible force for press fits					100 N
Sense of rotation, drive to output					=
Recommended input speed					< 8000 rpm
Recommended temperature range					0...+80°C
Number of stages	1	2	3	4	5
Max. radial load, 10 mm from flange	20 N	30 N	40 N	40 N	40 N

Stock program
Standard program
Special program (on request)

Part Numbers

		305129	305132	305138	305144	305148	305154	305160	305163	305169	305175	305181
Gearhead Data												
1 Reduction		3.8:1	14:1	53:1	104:1	198:1	370:1	590:1	742:1	1386:1	1996:1	3189:1
2 Reduction absolute		15/4	225/16	3375/64	87723/845	50625/256	10556001/28561	59049/100	759375/1024	158340015/114244	285012027/142805	1594323/500
3 Max. motor shaft diameter	mm	4	4	4	3.2	4	3.2	4	4	3.2	3.2	4
Part Numbers		305130	305133	305139	305145	305149	305155	305161	305164	305170	305176	305182
1 Reduction		4.4:1	16:1	62:1	109:1	231:1	389:1	690:1	867:1	1460:1	2102:1	3728:1
2 Reduction absolute		57/13	855/52	12825/208	2187/20	192375/832	263169/676	1121931/1625	2885625/3328	3947535/2704	7105563/3380	30292137/8125
3 Max. motor shaft diameter	mm	3.2	3.2	3.2	4	3.2	3.2	3.2	3.2	3.2	3.2	3.2
Part Numbers		305131	305134	305140	305146	305150	305156	305162	305165	305171	305177	305183
1 Reduction		5.4:1	19:1	72:1	128:1	270:1	410:1	850:1	1014:1	1538:1	2214:1	4592:1
2 Reduction absolute		27/5	3249/169	48735/676	41553/325	731025/2704	6561/16	531441/625	10965375/10816	98415/64	177147/80	14348907/3125
3 Max. motor shaft diameter	mm	2.5	3.2	3.2	3.2	3.2	4	2.5	3.2	4	4	2.5
Part Numbers			305135	305141	305147	305151	305157		305166	305172	305178	
1 Reduction			20:1	76:1	157:1	285:1	455:1		1068:1	1621:1	2458:1	
2 Reduction absolute			81/4	1215/16	19683/125	18225/64	5000211/10985		273375/256	60169205/371293	135005697/54925	
3 Max. motor shaft diameter	mm		4	4	2.5	4	3.2		4	3.2	3.2	
Part Numbers			305136	305142		305152	305158		305167	305173	305179	
1 Reduction			24:1	84:1		316:1	479:1		1185:1	1707:1	2589:1	
2 Reduction absolute			1539/65	185193/2197		2777895/8788	124659/260		41668425/35152	15000633/8788	3365793/1300	
3 Max. motor shaft diameter	mm		3.2	3.2		3.2	3.2		3.2	3.2	3.2	
Part Numbers			305137	305143		305153	305159		305168	305174	305180	
1 Reduction			29:1	89:1		333:1	561:1		1249:1	1798:1	3027:1	
2 Reduction absolute			729/25	4617/52		69255/208	2368521/4225		1038825/832	373977/208	63950067/21125	
3 Max. motor shaft diameter	mm		2.5	3.2		3.2	3.2		3.2	3.2	3.2	
4 Number of stages		1	2	3	3	4	4	4	5	5	5	5
5 Max. continuous torque	Nm	0.5	0.6	1.2	1.2	1.8	1.8	1.8	2.0	2.0	2.0	2.0
6 Intermittently permissible torque at gear output	Nm	0.8	0.9	1.9	1.9	2.7	2.7	2.7	3.0	3.0	3.0	3.0
7 Max. efficiency	%	84	70	59	59	49	49	49	42	42	42	42
8 Weight	g	64	77	90	90	103	103	103	116	116	116	116
9 Average backlash no load	°	1.0	1.2	1.6	1.6	2.0	2.0	2.0	2.0	2.0	2.0	2.0
10 Mass inertia	gcm^2	0.5	0.4	0.4	0.4	0.4	0.4	0.4	0.4	0.4	0.4	0.4
11 Gearhead length L1	mm	35.8	42.6	49.4	49.4	56.2	56.2	56.2	63.0	63.0	63.0	63.0

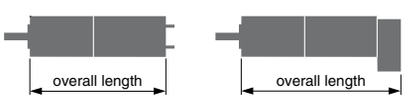

maxon Modular System

+ Motor	Page	+ Sensor/Brake	Page	Overall length [mm] = Motor length + gearhead length + (sensor/brake) + assembly parts										
EC 22, 40 W, ster.	186			80.4	87.2	94.0	94.0	100.8	100.8	100.8	107.6	107.6	107.6	107.6
EC 22, 100 W, ster.	188			98.6	105.4	112.2	112.2	119.0	119.0	119.0	125.8	125.8	125.8	125.8

Application	Sterilization information	
135°C **Sterilizable Devices**	Tested for 100 sterilization cycles in an autoclave. No need to dismantle.	
Saws	Sterilization with steam	
Surgical Reamers	Temperature	134°C ± 4°C
Arthroscopic Shavers	Compression pressure up to	2.3 bar
Surgical Staplers	Rel. humidity	100 %
Dental Tools	Cycle length	18 minutes

Spur Gearhead GS 24 A ∅24 mm, 0.1 Nm

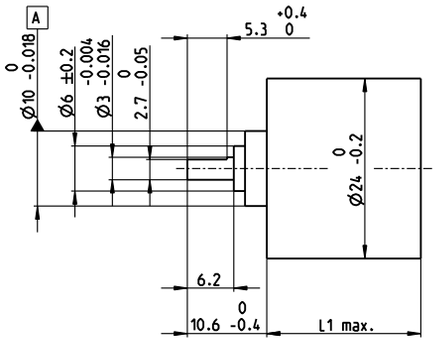

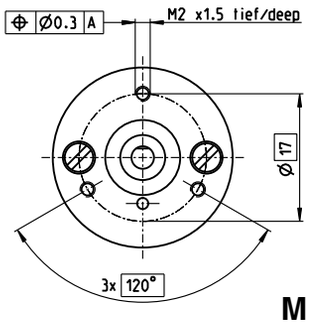

M 1:1

Technical Data

Spur Gearhead	straight teeth
Housing	plastic
Output shaft	stainless steel, hardened
Bearing at output	sleeve bearing
Radial play, 8 mm from flange	max. 0.038 mm
Axial play	0.03–0.30 mm
Max. permissible axial load	8 N
Max. permissible force for press fits	500 N
Recommended input speed	< 4000 rpm
Recommended temperature range	-15…+80°C
Max. radial load, 8 mm from flange	5 N

Stock program
Standard program
Special program (on request)

Part Numbers

Gearhead Data			110480	110481	110482	110483	110484	110485	110486
1	Reduction		7.2:1	20:1	32:1	64:1	131:1	199:1	325:1
2	Reduction absolute		93/13	753424/38025	923521/28561	837/13	212629/1625	887503681/4455516	14070001/43264
3	Max. motor shaft diameter	mm	2	2	2	2	2	2	2
4	Number of stages		2	4	4	4	4	6	6
5	Max. continuous torque	Nm	0.1	0.1	0.1	0.1	0.1	0.1	0.1
6	Intermittently permissible torque at gear output	Nm	0.15	0.15	0.15	0.15	0.15	0.15	0.15
12	Sense of rotation, drive to output		=	=	=	=	=	=	=
7	Max. efficiency	%	81	66	66	66	66	53	53
8	Weight	g	25	28	28	28	28	30	30
9	Average backlash no load	°	1.0	2.0	2.0	2.0	2.0	3.0	3.0
10	Mass inertia	gcm^2	0.008	0.01	0.008	0.007	0.006	0.008	0.006
11	Gearhead length L1*	mm	16.5	20.2	20.2	20.2	20.2	24	24

*L1 for A-max 22 L1 is–2.8 mm

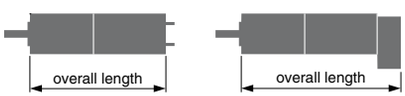

maxon Modular System

+ Motor	Page	+ Sensor/Brake	Page	Overall length [mm] = Motor length + gearhead length + (sensor/brake) + assembly parts						
A-max 19	125/126			45.5	49.2	49.2	49.2	49.2	53.0	53.0
A-max 19, 1.5 W	126	MR	315/317	50.6	54.3	54.3	54.3	54.3	58.1	58.1
A-max 19, 1.5 W	126	Enc 22	324	59.9	63.6	63.6	63.6	63.6	67.4	67.4
A-max 19, 1.5 W	126	MEnc 13	334	53.0	56.7	56.7	56.7	56.7	60.5	60.5
A-max 19, 2.5 W	127/128			48.1	51.8	51.8	51.8	51.8	55.6	55.6
A-max 19, 2.5 W	128	MR	315/317	52.4	56.1	56.1	56.1	56.1	59.9	59.9
A-max 19, 2.5 W	128	Enc 22	324	62.5	66.2	66.2	66.2	66.2	70.0	70.0
A-max 19, 2.5 W	128	MEnc 13	334	55.6	59.3	59.3	59.3	59.3	63.1	63.1
A-max 22	129-132			45.7	49.4	49.4	49.4	49.4	53.2	53.2
A-max 22	130/132	MR	315/317	50.7	54.4	54.4	54.4	54.4	58.2	58.2
A-max 22	130/132	Enc 22	324	60.1	63.8	63.8	63.8	63.8	67.6	67.6
A-max 22	130/132	MEnc 13	334	52.8	56.5	56.5	56.5	56.5	60.3	60.3

Planetary Gearhead GP 26 A ∅26 mm, 0.75–4.5 Nm

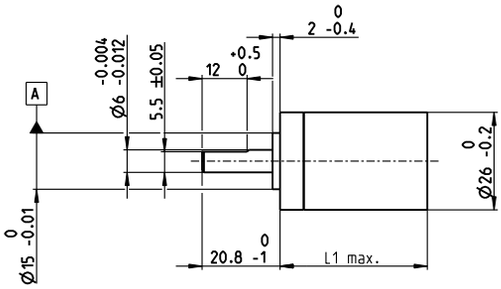

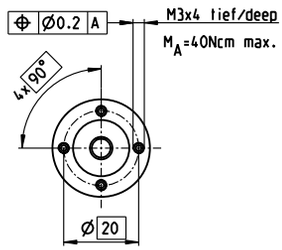

M 1:2

Technical Data

Planetary Gearhead			straight teeth
Output shaft			stainless steel, hardened
Bearing at output			preloaded ball bearings
Radial play, 5 mm from flange			max. 0.1 mm
Axial play at axial load	< 6 N		0 mm
	> 6 N		max. 0.4 mm
Max. permissible axial load			120 N
Max. permissible force for press fits			120 N
Sense of rotation, drive to output			=
Recommended input speed			< 8000 rpm
Recommended temperature range			-30…+100°C
Extended range as option			-40…+100°C
Number of stages	1	2	3
Max. radial load, 12 mm from flange	70 N	110 N	140 N

Stock program
Standard program
Special program (on request)

Part Numbers

			406757	406762	406764	406767	406128	406769	406770	406771	406092
Gearhead Data											
1	Reduction		5.2:1	19:1	27:1	35:1	71:1	100:1	139:1	181:1	236:1
2	Reduction absolute		57/11	3591/187	3249/121	1539/44	226233/3179	204687/2057	185193/1331	87723/484	41553/176
3	Max. motor shaft diameter	mm	3	3	3	3	3	3	3	3	3
4	Number of stages		1	2	2	2	3	3	3	3	3
5	Max. continuous torque	Nm	0.75	2.25	2.25	2.25	4.5	4.5	4.5	4.5	4.5
6	Intermittently permissible torque at gear output	Nm	1.1	3.2	3.2	3.2	6.2	6.2	6.2	6.2	6.2
7	Max. efficiency	%	90	80	80	80	70	70	70	70	70
8	Weight	g	53	77	77	77	93	93	93	93	93
9	Average backlash no load	°	0.5	0.7	0.7	0.7	0.8	0.8	0.8	0.8	0.8
10	Mass inertia	gcm^2	0.96	0.54	0.54	0.54	0.31	0.31	0.31	0.31	0.31
11	Gearhead length L1	mm	23.4	32.9	32.9	32.9	39.5	39.5	39.5	39.5	39.5
13	Max. transmittable continuous power	W	60	35	35	35	20	20	20	20	20
14	Max. transmittable intermittent power	W	90	50	50	50	30	30	30	30	30

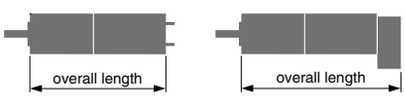

maxon Modular System

+ Motor	Page	+ Sensor/Brake	Page	**Overall length [mm]** = Motor length + gearhead length + (sensor/brake) + assembly parts								
RE 25	107/109			78.0	87.5	87.5	87.5	94.1	94.1	94.1	94.1	94.1
RE 25	107/109	MR	319	89.0	98.5	98.5	98.5	105.1	105.1	105.1	105.1	105.1
RE 25	107/109	Enc 22	324	92.1	101.6	101.6	101.6	108.2	108.2	108.2	108.2	108.2
RE 25	107/109	HED_ 5540	325/327	98.8	108.3	108.3	108.3	114.9	114.9	114.9	114.9	114.9
RE 25	107/109	DCT22	336	100.3	109.8	109.8	109.8	116.4	116.4	116.4	116.4	116.4
RE 25, 20 W	108			66.5	76.0	76.0	76.0	82.6	82.6	82.6	82.6	82.6
RE 25, 20 W	108	MR	319	77.5	87.0	87.0	87.0	93.6	93.6	93.6	93.6	93.6
RE 25, 20 W	108	HED_ 5540	326	87.3	96.8	96.8	96.8	103.4	103.4	103.4	103.4	103.4
RE 25, 20 W	108	DCT 22	336	88.8	98.3	98.3	98.3	104.9	104.9	104.9	104.9	104.9
RE 25, 20 W	108	AB 28	372	100.6	110.1	110.1	110.1	116.7	116.7	116.7	116.7	116.7
RE 25, 20 W	108	HED_5540/AB 28	326/372	117.8	127.3	127.3	127.3	133.9	133.9	133.9	133.9	133.9
RE 25, 20 W	109	AB 28	372	112.1	121.6	121.6	121.6	128.2	128.2	128.2	128.2	128.2
RE 25, 20 W	109	HED_ 5540/AB 28	327/372	129.3	138.8	138.8	138.8	145.4	145.4	145.4	145.4	145.4
A-max 26	133-140			68.2	77.7	77.7	77.7	84.3	84.3	84.3	84.3	84.3
A-max 26	133-140	MEnc 13	335	75.3	84.8	84.8	84.8	91.4	91.4	91.4	91.4	91.4
A-max 26	133-140	MR	319	77.0	86.5	86.5	86.5	93.1	93.1	93.1	93.1	93.1
A-max 26	133-140	Enc 22	324	82.6	92.1	92.1	92.1	98.7	98.7	98.7	98.7	98.7
A-max 26	133-140	HED_ 5540	326/327	86.6	96.1	96.1	96.1	102.7	102.7	102.7	102.7	102.7

Spur Gearhead GS 30 A ∅30 mm, 0.07–0.2 Nm

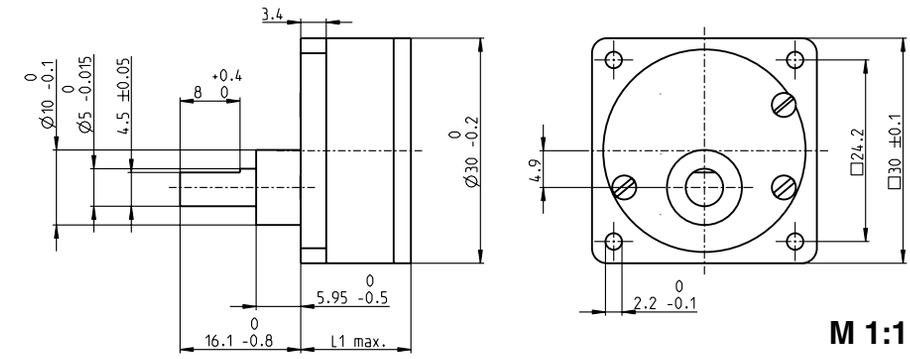

Technical Data

Spur Gearhead	straight teeth
Output shaft	stainless steel
Shaft diameter as option	8 mm
Bearing at output	sleeve bearing
Radial play, 5 mm from flange	max. 0.1 mm
Axial play	0.03–0.2 mm
Max. permissible axial load	15 N
Max. permissible force for press fits	400 N
Recommended input speed	< 5000 rpm
Recommended temperature range	-5…+80°C
Max. radial load, 5 mm from flange	35 N

Option: Low-noise version

Stock program
Standard program
Special program (on request)

Part Numbers

			110445	110446	110447	110448	110449	110450
Gearhead Data								
1	Reduction		15:1	30:1	60:1	100:1	200:1	500:1
2	Reduction absolute		15	30	60	100	200	500
3	Max. motor shaft diameter	mm	2	2	2	2	2	2
4	Number of stages		3	3	4	4	5	6
5	Max. continuous torque	Nm	0.07	0.07	0.10	0.10	0.20	0.20
6	Intermittently permissible torque at gear output	Nm	0.21	0.21	0.30	0.30	0.60	0.60
12	Sense of rotation, drive to output		≠	≠	=	=	≠	=
7	Max. efficiency	%	73	73	66	66	60	53
8	Weight	g	40	40	45	45	50	55
9	Average backlash no load	°	1.0	1.0	1.5	1.5	2.0	2.5
10	Mass inertia	gcm^2	0.17	0.14	0.12	0.10	0.10	0.10
11	Gearhead length L1	mm	23.0	23.0	25.5	25.5	30.5	30.5

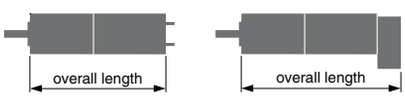

maxon Modular System

+ Motor	Page	+ Sensor/Brake	Page	Overall length [mm] = Motor length + gearhead length + (sensor/brake) + assembly parts					
A-max 26	133-140			67.8	67.8	70.3	70.3	75.3	75.3
A-max 26	134-140	MEnc 13	335	74.9	74.9	77.4	77.4	82.4	82.4
A-max 26	134-140	MR	319	76.6	76.6	79.1	79.1	84.1	84.1
A-max 26	134-140	Enc 22	324	82.2	82.2	84.7	84.7	89.7	89.7
A-max 26	134-140	HED_ 5540	326/327	86.2	86.2	88.7	88.7	93.7	93.7

Planetary Gearhead GP 32 BZ ∅32 mm, 0.75–4.5 Nm

Low Backlash

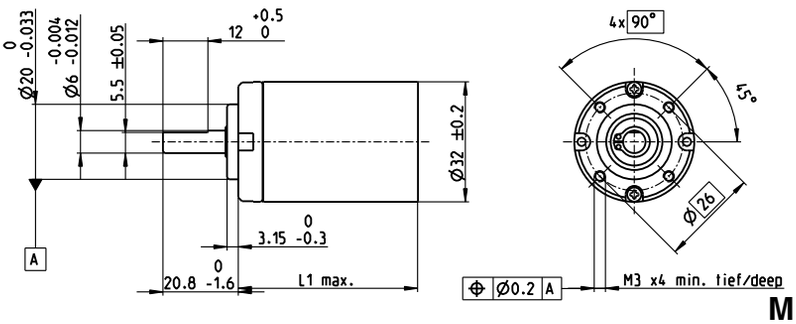

M 1:2

Technical Data

Planetary Gearhead			straight teeth
Output shaft			stainless steel, hardened
Bearing at output			ball bearing
Radial play, 5 mm from flange			max. 0.1 mm
Axial play			max. 0.7 mm
Max. permissible axial load			120 N
Max. permissible force for press fits			120 N
Sense of rotation, drive to output			=
Recommended input speed			< 4000 rpm
Recommended temperature range			-40...+100°C
Number of stages	1	2	3
Max. radial load, 12 mm from flange	70 N	110 N	130 N

Stock program
Standard program
Special program (on request)

Part Numbers

			358975	351942	358331	357988	358335	358385	358512	358513	358515	358516
Gearhead Data												
1	Reduction		3.7:1	5.2:1	19:1	27:1	35:1	71:1	100:1	139:1	181:1	236:1
2	Reduction absolute		63/17	57/11	3591/187	3249/121	1539/44	226233/3179	204687/2057	185193/1331	87723/484	41553/176
3	Max. motor shaft diameter	mm	5.5	3	3	3	3	3	3	3	3	3
4	Number of stages		1	1	2	2	2	3	3	3	3	3
5	Max. continuous torque	Nm	0.75	0.75	2.25	2.25	2.25	4.5	4.5	4.5	4.5	4.5
	Max. continuous torque within the preloading	Nm	0.5	0.5	1.1	1.1	1.1	1.7	1.7	1.7	1.7	1.7
6	Intermittently permissible torque at gear output	Nm	1.1	1.1	3.2	3.2	3.2	6.2	6.2	6.2	6.2	6.2
7	Max. efficiency	%	85	85	80	80	80	70	70	70	70	70
8	Weight	g	150	150	190	190	190	240	240	240	240	240
9	Average backlash no load	°	0.15	0.15	0.35	0.35	0.35	0.5	0.5	0.5	0.5	0.5
10	Mass inertia	gcm^2	1.25	1.25	0.75	0.75	0.75	0.7	0.7	0.7	0.7	0.7
11	Gearhead length L1*	mm	33.5	33.5	43.6	43.6	43.6	53.1	53.1	53.1	53.1	53.1

*for EC 32 L1 is + 6.4 mm, for RE 30 L1 is + 1.0 mm

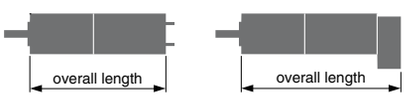

maxon Modular System

+ Motor	Page	+ Sensor/Brake	Page	Overall length [mm] = Motor length + gearhead length + (sensor/brake) + assembly parts									
RE 25	107/109			88.1	88.1	98.2	98.2	98.2	107.7	107.7	107.7	107.7	107.7
RE 25	107/109	MR	319	99.1	99.1	109.2	109.2	109.2	118.7	118.7	118.7	118.7	118.7
RE 25	107/109	Enc 22	324	102.2	102.2	112.3	112.3	112.3	121.8	121.8	121.8	121.8	121.8
RE 25	107/109	HED_ 5540	325/327	108.9	108.9	119.0	119.0	119.0	128.5	128.5	128.5	128.5	128.5
RE 25	107/109	DCT 22	336	110.4	110.4	120.5	120.5	120.5	130.0	130.0	130.0	130.0	130.0
RE 25, 20 W	108			76.6	76.6	86.7	86.7	86.7	96.2	96.2	96.2	96.2	96.2
RE 25, 20 W	108	MR	319	87.6	87.6	97.7	97.7	97.7	107.2	107.2	107.2	107.2	107.2
RE 25, 20 W	108	HED_ 5540	326/329	97.4	97.4	107.5	107.5	107.5	117.0	117.0	117.0	117.0	117.0
RE 25, 20 W	108	DCT 22	336	98.9	98.9	109.0	109.0	109.0	118.5	118.5	118.5	118.5	118.5
RE 25, 20 W	108	AB 28	372	110.7	110.7	120.8	120.8	120.8	130.3	130.3	130.3	130.3	130.3
RE 25, 20 W	108	HED_ 5540/AB 28	326/372	127.9	127.9	138.0	138.0	138.0	147.5	147.5	147.5	147.5	147.5
RE 25, 20 W	109	AB 28	372	122.2	122.2	132.3	132.3	132.3	141.8	141.8	141.8	141.8	141.8
RE 25, 20 W	109	HED_ 5540/AB 28	325/372	139.4	139.4	149.5	149.5	149.5	159.0	159.0	159.0	159.0	159.0
RE 30, 60 W	111			102.6	102.6	112.7	112.7	112.7	122.2	122.2	122.2	122.2	122.2
RE 30, 60 W	111	MR	320	114.0	114.0	124.1	124.1	124.1	133.6	133.6	133.6	133.6	133.6
RE 30, 60 W	111	HED_ 5540	325/327	123.4	123.4	133.5	133.5	133.5	143.0	143.0	143.0	143.0	143.0
RE 35, 90 W	112			104.6	104.6	114.7	114.7	114.7	124.2	124.2	124.2	124.2	124.2
RE 35, 90 W	112	MR	320	116.0	116.0	126.1	126.1	126.1	135.6	135.6	135.6	135.6	135.6
RE 35, 90 W	112	HED_ 5540	325/327	125.3	125.3	135.4	135.4	135.4	144.9	144.9	144.9	144.9	144.9
RE 35, 90 W	112	DCT 22	336	122.7	122.7	132.8	132.8	132.8	142.3	142.3	142.3	142.3	142.3
RE 35, 90 W	112	AB 28	372	140.7	140.7	150.8	150.8	150.8	160.3	160.3	160.3	160.3	160.3
RE 35, 90 W	112	HEDS 5540/AB 28	325/372	157.9	157.9	168.0	168.0	168.0	177.5	177.5	177.5	177.5	177.5
A-max 26	133-140			78.3	78.3	88.4	88.4	88.4	97.9	97.9	97.9	97.9	97.9
A-max 26	133-139	MEnc 13	335	85.4	85.4	95.5	95.5	95.5	105.0	105.0	105.0	105.0	105.0
A-max 26	134-140	MR	319	87.1	87.1	97.2	97.2	97.2	106.7	106.7	106.7	106.7	106.7
A-max 26	134-140	Enc 22	324	92.7	92.7	102.8	102.8	102.8	112.3	112.3	112.3	112.3	112.3
A-max 26	134-140	HED_ 5540	326/327	96.7	96.7	106.8	106.8	106.8	116.3	116.3	116.3	116.3	116.3
A-max 32	141/143			96.5	96.5	106.6	106.6	106.6	116.1	116.1	116.1	116.1	116.1
A-max 32	142/144			95.1	95.1	105.2	105.2	105.2	114.7	114.7	114.7	114.7	114.7
A-max 32	142/144	MR	320	106.3	106.3	116.4	116.4	116.4	125.9	125.9	125.9	125.9	125.9
A-max 32	142/144	HED_ 5540	326/327	115.9	115.9	126.0	126.0	126.0	135.5	135.5	135.5	135.5	135.5
EC 32, 80 W	192			100.2	100.2	110.3	110.3	110.3	119.8	119.8	119.8	119.8	119.8
EC 32, 80 W	192	HED_ 5540	326/328	118.6	118.6	128.7	128.7	128.7	138.2	138.2	138.2	138.2	138.2
EC 32, 80 W	192	Res 26	337	120.3	120.3	130.4	130.4	130.4	139.9	139.9	139.9	139.9	139.9
MCD EPOS, 60 W	367			153.6	153.6	163.7	163.7	163.7	173.2	173.2	173.2	173.2	173.2
MCD EPOS P, 60 W	367			153.6	153.6	163.7	163.7	163.7	173.2	173.2	173.2	173.2	173.2

Planetary Gearhead GP 32 A ∅32 mm, 0.75–4.5 Nm

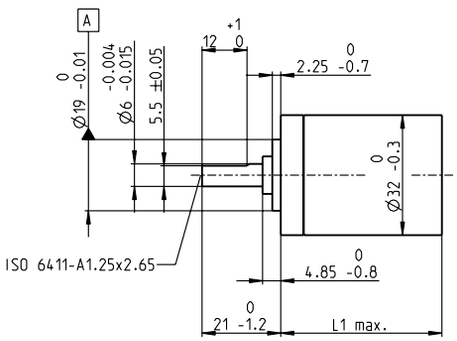

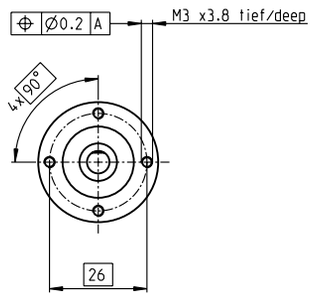

M 1:2

Technical Data

Planetary Gearhead	straight teeth
Output shaft	stainless steel
Shaft diameter as option	8 mm
Bearing at output	ball bearing
Radial play, 5 mm from flange	max. 0.14 mm
Axial play	max. 0.4 mm
Max. permissible axial load	120 N
Max. permissible force for press fits	120 N
Sense of rotation, drive to output	=
Recommended input speed	< 6000 rpm
Recommended temperature range	-40…+100°C
Number of stages	1 2 3 4 5
Max. radial load, 10 mm from flange	140 N 140 N 200 N 220 N 220 N

Option: Low-noise version

Stock program
Standard program
Special program (on request)

			Part Numbers											
			166155	166158	166163	166164	166169	166174	166179	166184	166187	166192	166197	166202
Gearhead Data														
1	Reduction		3.7:1	14:1	33:1	51:1	111:1	246:1	492:1	762:1	1181:1	1972:1	2829:1	4380:1
2	Reduction absolute		26/7	676/49	529/16	17576/343	13824/125	421824/1715	86112/175	19044/25	10123776/8575	8626176/4375	495144/175	109503/25
3	Max. motor shaft diameter	mm	6	6	3	6	4	4	3	3	4	4	3	3
	Part Numbers		166156	166159		166165	166170	166175	166180	166185	166188	166193	166198	166203
1	Reduction		4.8:1	18:1		66:1	123:1	295:1	531:1	913:1	1414:1	2189:1	3052:1	5247:1
2	Reduction absolute		24/5	624/35		16224/245	6877/56	101062/343	331776/625	36501/40	2425488/1715	536406/245	1907712/625	839523/160
3	Max. motor shaft diameter	mm	4	4		4	3	3	4	3	3	3	3	3
	Part Numbers		166157	166160		166166	166171	166176	166181	166186	166189	166194	166199	166204
1	Reduction		5.8:1	21:1		79:1	132:1	318:1	589:1	1093:1	1526:1	2362:1	3389:1	6285:1
2	Reduction absolute		23/4	299/14		3887/49	3312/25	389376/1225	20631/35	279841/256	9345024/6125	2066688/875	474513/140	6436343/1024
3	Max. motor shaft diameter	mm	3	3		3	3	4	3	3	4	3	3	3
	Part Numbers			166161		166167	166172	166177	166182		166190	166195	166200	
1	Reduction			23:1		86:1	159:1	411:1	636:1		1694:1	2548:1	3656:1	
2	Reduction absolute			576/25		14976/175	1587/10	359424/875	79488/125		1162213/686	7962624/3125	457056/125	
3	Max. motor shaft diameter	mm		4		4	3	4	3		3	4	3	
	Part Numbers			166162		166168	166173	166178	166183		166191	166196	166201	
1	Reduction			28:1		103:1	190:1	456:1	706:1		1828:1	2623:1	4060:1	
2	Reduction absolute			138/5		3588/35	12167/64	89401/196	158171/224		2238912/1225	2056223/784	3637933/896	
3	Max. motor shaft diameter	mm		3		3	3	3	3		3	3	3	
4	Number of stages		1	2	2	3	3	4	4	4	5	5	5	5
5	Max. continuous torque	Nm	0.75	2.25	2.25	4.50	4.50	4.50	4.50	4.50	4.50	4.50	4.50	4.50
6	Intermittently permissible torque at gear output	Nm	1.1	3.4	3.4	6.5	6.5	6.5	6.5	6.5	6.5	6.5	6.5	6.5
7	Max. efficiency	%	80	75	75	70	70	60	60	60	50	50	50	50
8	Weight	g	118	162	162	194	194	226	226	226	258	258	258	258
9	Average backlash no load	°	0.7	0.8	0.8	1.0	1.0	1.0	1.0	1.0	1.0	1.0	1.0	1.0
10	Mass inertia	gcm^2	1.5	0.8	0.8	0.7	0.7	0.7	0.7	0.7	0.7	0.7	0.7	0.7
11	Gearhead length L1	mm	26.5	36.4	36.4	43.1	43.1	49.8	49.8	49.8	56.5	56.5	56.5	56.5

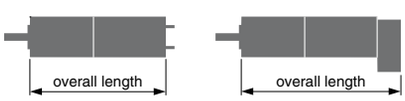

maxon Modular System

+ Motor	Page	+ Sensor/Brake	Page	Overall length [mm] = Motor length + gearhead length + (sensor/brake) + assembly parts											
RE 25	107/109			81.1	91.0	91.0	97.7	97.7	104.4	104.4	104.4	111.1	111.1	111.1	111.1
RE 25	107/109	MR	319	92.1	102.0	102.0	108.7	108.7	115.4	115.4	115.4	122.1	122.1	122.1	122.1
RE 25	107/109	Enc 22	324	95.2	105.1	105.1	111.8	111.8	118.5	118.5	118.5	125.2	125.2	125.2	125.2
RE 25	107/109	HED_ 5540	325/327	101.9	111.8	111.8	118.5	118.5	125.2	125.2	125.2	131.9	131.9	131.9	131.9
RE 25	107/109	DCT 22	336	103.4	113.3	113.3	120.0	120.0	126.7	126.7	126.7	133.4	133.4	133.4	133.4
RE 25, 20 W	108			69.6	79.5	79.5	86.2	86.2	92.9	92.9	92.9	99.6	99.6	99.6	99.6
RE 25, 20 W	108	MR	319	80.6	90.5	90.5	97.2	97.2	103.9	103.9	103.9	110.6	110.6	110.6	110.6
RE 25, 20 W	108	HED_ 5540	326/329	90.4	100.3	100.3	107.0	107.0	113.7	113.7	113.7	120.4	120.4	120.4	120.4
RE 25, 20 W	108	DCT22	336	91.9	101.8	101.8	108.5	108.5	115.2	115.2	115.2	121.9	121.9	121.9	121.9
RE 25, 20 W	108	AB 28	372	103.7	113.6	113.6	120.3	120.3	127.0	127.0	127.0	133.7	133.7	133.7	133.7
RE 25, 20 W	108	HED_ 5540/AB 28	326/372	120.9	130.8	130.8	137.5	137.5	144.2	144.2	144.2	150.9	150.9	150.9	150.9
RE 25, 20 W	109	AB 28	372	115.2	125.1	125.1	131.8	131.8	138.5	138.5	138.5	145.2	145.2	145.2	145.2
RE 25, 20 W	109	HED_ 5540/AB 28	325/372	132.4	142.3	142.3	149.0	149.0	155.7	155.7	155.7	162.4	162.4	162.4	162.4
A-max 26	133-140			71.3	81.2	81.2	87.9	87.9	94.6	94.6	94.6	101.3	101.3	101.3	101.3
A-max 26	134-140	MEnc 13	335	78.4	88.3	88.3	95.0	95.0	101.7	101.7	101.7	108.4	108.4	108.4	108.4
A-max 26	134-140	MR	319	80.1	90.0	90.0	96.7	96.7	103.4	103.4	103.4	110.1	110.1	110.1	110.1
A-max 26	134-140	Enc 22	324	85.7	95.6	95.6	102.3	102.3	109.0	109.0	109.0	115.7	115.7	115.7	115.7
A-max 26	134-140	HED_ 5540	326/327	89.7	99.6	99.6	106.3	106.3	113.0	113.0	113.0	119.7	119.7	119.7	119.7
RE-max 29	163-166			71.3	81.2	81.2	87.9	87.9	94.6	94.6	94.6	101.3	101.3	101.3	101.3
RE-max 29	164/166	MR	319	80.1	90.0	90.0	96.7	96.7	103.4	103.4	103.4	110.1	110.1	110.1	110.1

Planetary Gearhead GP 32 A ∅32 mm, 0.75–4.5 Nm

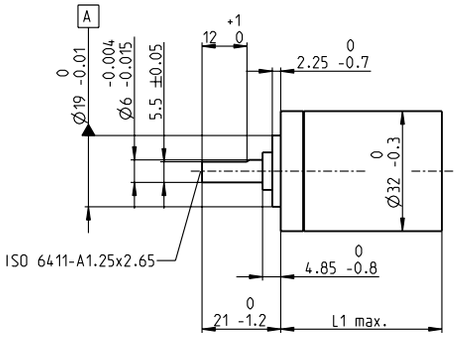

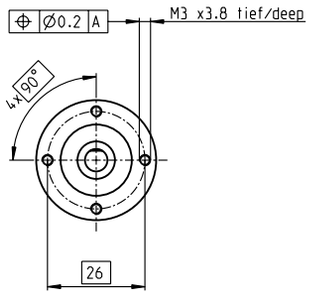

M 1:2

Technical Data

Planetary Gearhead	straight teeth
Output shaft	stainless steel
Shaft diameter as option	8 mm
Bearing at output	ball bearing
Radial play, 5 mm from flange	max. 0.14 mm
Axial play	max. 0.4 mm
Max. permissible axial load	120 N
Max. permissible force for press fits	120 N
Sense of rotation, drive to output	=
Recommended input speed	< 6000 rpm
Recommended temperature range	-40...+100°C
Number of stages	1 2 3 4 5
Max. radial load, 10 mm from flange	90 N 140 N 200 N 220 N 220 N

Option: Low-noise version

Stock program
Standard program
Special program (on request)

		Part Numbers												
			166155	166158	166163	166164	166169	166174	166179	166184	166187	166192	166197	166202
Gearhead Data														
1	Reduction		3.7:1	14:1	33:1	51:1	111:1	246:1	492:1	762:1	1181:1	1972:1	2829:1	4380:1
2	Reduction absolute		26/7	676/49	529/16	17576/343	13824/125	421824/1715	86112/175	19044/25	10123776/8575	8626176/4375	495144/175	109503/25
3	Max. motor shaft diameter	mm	6	6	3	6	4	4	3	3	4	4	3	3
	Part Numbers		166156	166159		166165	166170	166175	166180	166185	166188	166193	166198	166203
1	Reduction		4.8:1	18:1		66:1	123:1	295:1	531:1	913:1	1414:1	2189:1	3052:1	5247:1
2	Reduction absolute		24/5	624/35		16224/245	6877/56	101062/343	331776/625	36501/40	2425488/1715	536406/245	1907712/625	839523/160
3	Max. motor shaft diameter	mm	4	4		4	3	3	4	3	3	3	3	3
	Part Numbers		166157	166160		166166	166171	166176	166181	166186	166189	166194	166199	166204
1	Reduction		5.8:1	21:1		79:1	132:1	318:1	589:1	1093:1	1526:1	2362:1	3389:1	6285:1
2	Reduction absolute		23/4	299/14		3887/49	3312/25	38976/1225	20631/35	279841/256	9345024/6125	2066688/875	474513/140	6436343/1024
3	Max. motor shaft diameter	mm	3	3		3	3	4	3	3	4	3	3	3
	Part Numbers			166161		166167	166172	166177	166182		166190	166195	166200	
1	Reduction			23:1		86:1	159:1	411:1	636:1		1694:1	2548:1	3656:1	
2	Reduction absolute			576/25		14976/175	1587/10	359424/875	79488/125		1162213/686	7962624/3125	457056/125	
3	Max. motor shaft diameter	mm		4		4	3	4	3		3	4	3	
	Part Numbers			166162		166168	166173	166178	166183		166191	166196	166201	
1	Reduction			28:1		103:1	190:1	456:1	706:1		1828:1	2623:1	4060:1	
2	Reduction absolute			138/5		3588/35	12167/64	89401/196	158171/224		2238912/1225	2056223/784	3637933/896	
3	Max. motor shaft diameter	mm		3		3	3	3	3		3	3	3	
4	Number of stages		1	2	2	3	3	4	4	4	5	5	5	5
5	Max. continuous torque	Nm	0.75	2.25	2.25	4.50	4.50	4.50	4.50	4.50	4.50	4.50	4.50	4.50
6	Intermittently permissible torque at gear output	Nm	1.1	3.4	3.4	6.5	6.5	6.5	6.5	6.5	6.5	6.5	6.5	6.5
7	Max. efficiency	%	80	75	75	70	70	60	60	60	50	50	50	50
8	Weight	g	118	162	162	194	194	226	226	226	258	258	258	258
9	Average backlash no load	°	0.7	0.8	0.8	1.0	1.0	1.0	1.0	1.0	1.0	1.0	1.0	1.0
10	Mass inertia	gcm^2	1.5	0.8	0.8	0.7	0.7	0.7	0.7	0.7	0.7	0.7	0.7	0.7
11	Gearhead length L1*	mm	26.5	36.4	36.4	43.1	43.1	49.8	49.8	49.8	56.5	56.5	56.5	56.5

*for EC 32 flat L1 is + 2.0 mm

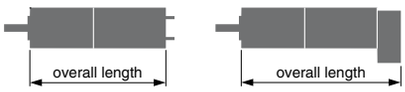

maxon Modular System

+ Motor	Page	+ Sensor/Brake	Page	**Overall length [mm]** = Motor length + gearhead length + (sensor/brake) + assembly parts											
RE 30, 15 W	110			94.6	104.5	104.5	111.2	111.2	117.9	117.9	117.9	124.6	124.6	124.6	124.6
RE 30, 15 W	110	MR	320	106.0	115.9	115.9	122.6	122.6	129.3	129.3	129.3	136.0	136.0	136.0	136.0
RE 30, 15 W	110	HED_ 5540	325/327	115.4	125.3	125.3	132.0	132.0	138.7	138.7	138.7	145.4	145.4	145.4	145.4
RE 30, 60 W	111			94.6	104.5	104.5	111.2	111.2	117.9	117.9	117.9	124.6	124.6	124.6	124.6
RE 30, 60 W	111	MR	320	106.0	115.9	115.9	122.6	122.6	129.3	129.3	129.3	136.0	136.0	136.0	136.0
RE 30, 60 W	111	HED_ 5540	325/327	115.4	125.3	125.3	132.0	132.0	138.7	138.7	138.7	145.4	145.4	145.4	145.4
RE 35, 90 W	112			97.6	107.5	107.5	114.2	114.2	120.9	120.9	120.9	127.6	127.6	127.6	127.6
RE 35, 90 W	112	MR	320	109.0	118.9	118.9	125.6	125.6	132.3	132.3	132.3	139.0	139.0	139.0	139.0
RE 35, 90 W	112	HED_ 5540	325/327	118.3	128.2	128.2	134.9	134.9	141.6	141.6	141.6	148.3	148.3	148.3	148.3
RE 35, 90 W	112	DCT 22	336	115.7	125.6	125.6	132.3	132.3	139.0	139.0	139.0	145.7	145.7	145.7	145.7
RE 35, 90 W	112	AB 28	372	133.7	143.6	143.6	150.3	150.3	157.0	157.0	157.0	163.7	163.7	163.7	163.7
RE 35, 90 W	112	HEDS 5540/AB 28	325/372	150.9	160.8	160.8	167.5	167.5	174.2	174.2	174.2	180.9	180.9	180.9	180.9
A-max 32	141/143			89.5	99.4	99.4	106.1	106.1	112.8	112.8	112.8	119.5	119.5	119.5	119.5
A-max 32	142/144			88.1	98.0	98.0	104.7	104.7	111.4	111.4	111.4	118.1	118.1	118.1	118.1
A-max 32	142/144	MR	320	99.3	109.2	109.2	115.9	115.9	122.6	122.6	122.6	129.3	129.3	129.3	129.3
A-max 32	142/144	HED_ 5540	326/327	108.9	118.8	118.8	125.5	125.5	132.2	132.2	132.2	138.9	138.9	138.9	138.9
EC 32, 80 W	192			86.6	96.5	96.5	103.2	103.2	109.9	109.9	109.9	116.6	116.6	116.6	116.6
EC 32, 80 W	192	HED_ 5540	326/328	105.0	114.9	114.9	121.6	121.6	128.3	128.3	128.3	135.0	135.0	135.0	135.0
EC 32, 80 W	192	Res 26	337	106.7	116.6	116.6	123.3	123.3	130.0	130.0	130.0	136.7	136.7	136.7	136.7
EC 32 flat, 15 W	226			44.5	54.4	54.4	61.1	61.1	67.8	67.8	67.8	74.5	74.5	74.5	74.5
EC 32 flat, IE, IP 00	227			54.6	64.5	64.5	71.2	71.2	77.9	77.9	77.9	84.6	84.6	84.6	84.6
EC 32 flat, IE, IP 40	227			56.3	66.2	66.2	72.9	72.9	79.6	79.6	79.6	86.3	86.3	86.3	86.3

Planetary Gearhead GP 32 AR ∅32 mm, 0.75 Nm

for high radial loads

∅6 mm output shaft

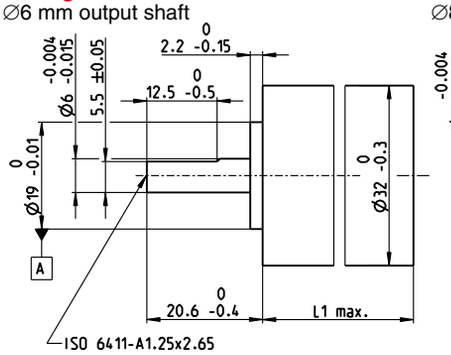

∅8 mm output shaft

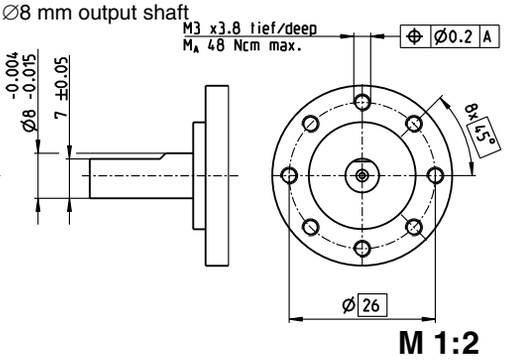

Technical Data

Planetary Gearhead	straight teeth	
Output shaft	stainless steel	
Bearing at output	ball bearing	
Radial play, 5 mm from flange	max. 0.14 mm	
Axial play	max. 0.1 mm	
Max. permissible axial load	120 N	
Max. permissible force for press fits	120 N	
Sense of rotation, drive to output	=	
Recommended input speed	< 6000 rpm	
Recommended temperature range	-40…+100°C	
Output shaft diameter	6 mm	8 mm
Max. radial load, 10 mm from flange	140 N	120 N

Stock program
Standard program
Special program (on request)

Part Numbers

			425862	425861	425860
Gearhead Data					
1	Reduction		3.7 : 1	4.8 : 1	5.8 : 1
2	Reduction absolute		26/7	24/5	23/4
3	Max. motor shaft diameter	mm	6	4	3
	Output shaft diameter	mm	6	6	6
	Part Numbers		425901	425899	425898
1	Reduction		3.7 : 1	4.8 : 1	5.8 : 1
2	Reduction absolute		26/7	24/5	23/4
3	Max. motor shaft diameter	mm	6	4	3
	Output shaft diameter	mm	8	8	8
4	Number of stages		1	1	1
5	Max. continuous torque	Nm	0.75	0.75	0.75
6	Intermittently permissible torque at gear output	Nm	1.1	1.1	1.1
7	Max. efficiency	%	90	90	90
8	Weight	g	111	111	111
9	Average backlash no load	°	0.7	0.7	0.7
10	Mass inertia	gcm^2	1.6	0.9	0.6
11	Gearhead length L1	mm	26.2	26.2	26.2

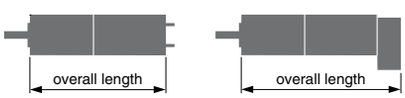

maxon Modular System

+ Motor	Page	+ Sensor/Brake	Page	Overall length [mm] = Motor length + gearhead length + (sensor/brake) + assembly parts		
RE 30, 60 W	111			94.3	94.3	94.3
RE 30, 60 W	111	MR	320	105.7	105.7	105.7
RE 30, 60 W	111	HED_5540	325/329	115.1	115.1	115.1
RE 35, 90 W	112			97.3	97.3	97.3
RE 35, 90 W	112	MR	320	108.7	108.7	108.7
RE 35, 90 W	112	HED_5540	325/329	118.0	118.0	118.0
RE 35, 90 W	112	DCT22	336	115.4	115.4	115.4
RE 35, 90 W	112	AB 28	372	133.4	133.4	133.4
RE 35, 90 W	112	HED_ 5540/AB 28	325/372	150.5	150.5	150.5
EC 32, 80 W	192			86.3	86.3	86.3
EC 32, 80 W	192	HED_5540	326/328	104.7	104.7	104.7
EC 32, 80 W	192	Res 26	337	106.4	106.4	106.4

Planetary Gearhead GP 32 C ∅32 mm, 1.0–6.0 Nm

Ceramic Version

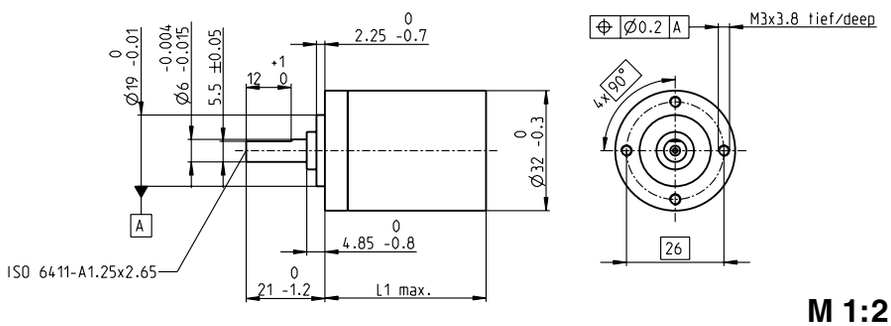

M 1:2

Technical Data

Planetary Gearhead	straight teeth
Output shaft	stainless steel
Shaft diameter as option	8 mm
Bearing at output	ball bearing
Radial play, 5 mm from flange	max. 0.14 mm
Axial play	max. 0.4 mm
Max. permissible axial load	120 N
Max. permissible force for press fits	120 N
Sense of rotation, drive to output	=
Recommended input speed	< 8000 rpm
Recommended temperature range	-40...+100°C

Number of stages	1	2	3	4	5
Max. radial load, 10 mm from flange	90 N	140 N	200 N	220 N	220 N

Option: Low-noise version

Stock program
Standard program
Special program (on request)

Part Numbers

		166930	166933	166938	166939	166944	166949	166954	166959	166962	166967	166972	166977
Gearhead Data													
1 Reduction		3.7:1	14:1	33:1	51:1	111:1	246:1	492:1	762:1	1181:1	1972:1	2829:1	4380:1
2 Reduction absolute		26/7	676/49	529/16	17576/343	13824/125	421824/1715	86112/175	19044/25	10123776/8575	8626176/4375	495144/175	109503/25
3 Max. motor shaft diameter	mm	6	6	3	6	4	4	3	3	4	4	3	3
Part Numbers		166931	166934		166940	166945	166950	166955	166960	166963	166968	166973	166978
1 Reduction		4.8:1	18:1		66:1	123:1	295:1	531:1	913:1	1414:1	2189:1	3052:1	5247:1
2 Reduction absolute		24/5	624/35		16224/245	6877/56	101062/343	331776/625	36501/40	2425488/1715	536406/245	1907712/625	839523/160
3 Max. motor shaft diameter	mm	4	4		4	3	3	4	3	3	3	3	3
Part Numbers		166932	166935		166941	166946	166951	166956	166961	166964	166969	166974	166979
1 Reduction		5.8:1	21:1		79:1	132:1	318:1	589:1	1093:1	1526:1	2362:1	3389:1	6285:1
2 Reduction absolute		23/4	299/14		3887/49	3312/25	389376/1225	20631/35	279841/256	9345024/6125	2066688/875	474513/140	6436343/1024
3 Max. motor shaft diameter	mm	3	3		3	3	4	3	3	4	3	3	3
Part Numbers			166936		166942	166947	166952	166957		166965	166970	166975	
1 Reduction			23:1		86:1	159:1	411:1	636:1		1694:1	2548:1	3656:1	
2 Reduction absolute			576/25		14976/175	1587/10	359424/875	79488/125		1162213/686	7962624/3125	457056/125	
3 Max. motor shaft diameter	mm		4		4	3	4	3		3	4	3	
Part Numbers			166937		166943	166948	166953	166958		166966	166971	166976	
1 Reduction			28:1		103:1	190:1	456:1	706:1		1828:1	2623:1	4060:1	
2 Reduction absolute			138/5		3588/35	12167/64	89401/196	158171/224		2238912/1225	2056223/784	3637933/896	
3 Max. motor shaft diameter	mm		3		3	3	3	3		3	3	3	
4 Number of stages		1	2	2	3	3	4	4	4	5	5	5	5
5 Max. continuous torque	Nm	1	3	3	6	6	6	6	6	6	6	6	6
6 Intermittently permissible torque at gear output	Nm	1.25	3.75	3.75	7.5	7.5	7.5	7.5	7.5	7.5	7.5	7.5	7.5
7 Max. efficiency	%	80	75	75	70	70	60	60	60	50	50	50	50
8 Weight	g	118	162	162	194	194	226	226	226	258	258	258	258
9 Average backlash no load	°	0.7	0.8	0.8	1.0	1.0	1.0	1.0	1.0	1.0	1.0	1.0	1.0
10 Mass inertia	gcm^2	1.5	0.8	0.8	0.7	0.7	0.7	0.7	0.7	0.7	0.7	0.7	0.7
11 Gearhead length L1	mm	26.5	36.4	36.4	43.1	43.1	49.8	49.8	49.8	56.5	56.5	56.5	56.5

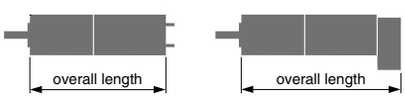

maxon Modular System

+ Motor	Page	+ Sensor/Brake	Page	Overall length [mm] = Motor length + gearhead length + (sensor/brake) + assembly parts										
RE 25, 10 W	107/109			81.1	91.0	91.0	97.7	97.7	104.4	104.4	111.1	111.1	111.1	111.1
RE 25, 10 W	107/109	MR	319	92.1	102.0	102.0	108.7	108.7	115.4	115.4	115.4	122.1	122.1	122.1	122.1
RE 25, 10 W	107/109	Enc 22	324	95.2	105.1	105.1	111.8	111.8	118.5	118.5	118.5	125.2	125.2	125.2	125.2
RE 25, 10 W	107/109	HED_ 5540	325/327	101.9	111.8	111.8	118.5	118.5	125.2	125.2	125.2	131.9	131.9	131.9	131.9
RE 25, 10 W	107/109	DCT 22	336	103.4	113.3	113.3	120.0	120.0	126.7	126.7	126.7	133.4	133.4	133.4	133.4
RE 25, 20 W	108			69.6	79.5	79.5	86.2	86.2	92.9	92.9	92.9	99.6	99.6	99.6	99.6
RE 25, 20 W	108	MR	319	80.6	90.5	90.5	97.2	97.2	103.9	103.9	103.9	110.6	110.6	110.6	110.6
RE 25, 20 W	108	HED_ 5540	326/329	90.4	100.3	100.3	107.0	107.0	113.7	113.7	113.7	120.4	120.4	120.4	120.4
RE 25, 20 W	108	DCT22	336	91.9	101.8	101.8	108.5	108.5	115.2	115.2	115.2	121.9	121.9	121.9	121.9
RE 25, 20 W	108	AB 28	372	103.7	113.6	113.6	120.3	120.3	127.0	127.0	127.0	133.7	133.7	133.7	133.7
RE 25, 20 W	108	HED_ 5540/AB 28	326/372	120.9	130.8	130.8	137.5	137.5	144.2	144.2	144.2	150.9	150.9	150.9	150.9
RE 25, 20 W	109	AB 28	372	115.2	125.1	125.1	131.8	131.8	138.5	138.5	138.5	145.2	145.2	145.2	145.2
RE 25, 20 W	109	HED_5540/AB 28	372	132.4	142.3	142.3	149.0	149.0	155.7	155.7	155.7	162.4	162.4	162.4	162.4
RE 30, 60 W	111			94.6	104.5	104.5	111.2	111.2	117.9	117.9	117.9	124.6	124.6	124.6	124.6
RE 30, 60 W	111	MR	320	106.0	115.9	115.9	122.6	122.6	129.3	129.3	129.3	136.0	136.0	136.0	136.0
RE 30, 60 W	111	HED_ 5540	325/327	115.4	125.3	125.3	132.0	132.0	138.7	138.7	138.7	145.4	145.4	145.4	145.4
RE 35, 90 W	112			97.6	107.5	107.5	114.2	114.2	120.9	120.9	120.9	127.6	127.6	127.6	127.6
RE 35, 90 W	112	MR	320	109.0	118.9	118.9	125.6	125.6	132.3	132.3	132.3	139.0	139.0	139.0	139.0
RE 35, 90 W	112	HED_ 5540	325/327	118.3	128.2	128.2	134.9	134.9	141.6	141.6	141.6	148.3	148.3	148.3	148.3
RE 35, 90 W	112	DCT 22	337	115.7	125.6	125.6	132.3	132.3	139.0	139.0	139.0	145.7	145.7	145.7	145.7
RE 35, 90 W	112	AB 28	372	133.7	143.6	143.6	150.3	150.3	157.0	157.0	157.0	163.7	163.7	163.7	163.7
RE 35, 90 W	112	HEDS 5540/AB 28	325/372	150.9	160.8	160.8	167.5	167.5	174.2	174.2	174.2	180.9	180.9	180.9	180.9
A-max 26	133-140			71.3	81.2	81.2	87.9	87.9	94.6	94.6	94.6	101.3	101.3	101.3	101.3
A-max 26	134-140	MEnc 13	335	78.4	88.3	88.3	95.0	95.0	101.7	101.7	101.7	108.4	108.4	108.4	108.4
A-max 26	134-140	MR	319	80.1	90.0	90.0	96.7	96.7	103.4	103.4	103.4	110.1	110.1	110.1	110.1
A-max 26	134-140	Enc 22	324	85.7	95.6	95.6	102.3	102.3	109.0	109.0	109.0	115.7	115.7	115.7	115.7
A-max 26	134-140	HED_ 5540	326/327	89.7	99.6	99.6	106.3	106.3	113.0	113.0	113.0	119.7	119.7	119.7	119.7
A-max 32	141/143			89.5	99.4	99.4	106.1	106.1	112.8	112.8	112.8	119.5	119.5	119.5	119.5
A-max 32	142/144			88.1	98.0	98.0	104.7	104.7	111.4	111.4	111.4	118.1	118.1	118.1	118.1
A-max 32	142/144	MR	320	99.3	109.2	109.2	115.9	115.9	122.6	122.6	122.6	129.3	129.3	129.3	129.3
A-max 32	142/144	HED_ 5540	326/327	108.9	118.8	118.8	125.5	125.5	132.2	132.2	132.2	138.9	138.9	138.9	138.9

Planetary Gearhead GP 32 C ∅32 mm, 1.0–6.0 Nm

Ceramic Version

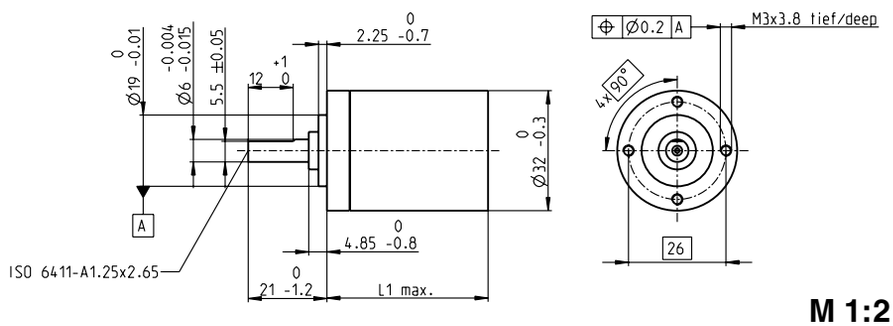

M 1:2

Technical Data

Planetary Gearhead	straight teeth
Output shaft	stainless steel
Shaft diameter as option	8 mm
Bearing at output	ball bearing
Radial play, 5 mm from flange	max. 0.14 mm
Axial play	max. 0.4 mm
Max. permissible axial load	120 N
Max. permissible force for press fits	120 N
Sense of rotation, drive to output	=
Recommended input speed	< 8000 rpm
Recommended temperature range	-40…+100°C

Number of stages	1	2	3	4	5
Max. radial load, 10 mm from flange	90 N	140 N	200 N	220 N	220 N

Option: Low-noise version

maxon gear

Stock program
Standard program
Special program (on request)

			Part Numbers											
			166930	166933	166938	166939	166944	166949	166954	166959	166962	166967	166972	166977
Gearhead Data														
1	Reduction		3.7:1	14:1	33:1	51:1	111:1	246:1	492:1	762:1	1181:1	1972:1	2829:1	4380:1
2	Reduction absolute		26/7	676/49	529/16	17576/343	13824/125	421824/1715	86112/175	19044/25	10123776/8575	8626176/4375	495144/175	109503/25
3	Max. motor shaft diameter	mm	6	6	3	6	4	4	3	3	4	4	3	3
	Part Numbers		166931	166934		166940	166945	166950	166955	166960	166963	166968	166973	166978
1	Reduction		4.8:1	18:1		66:1	123:1	295:1	531:1	913:1	1414:1	2189:1	3052:1	5247:1
2	Reduction absolute		24/5	624/35		16224/245	6877/56	101062/343	331776/625	36501/40	2425488/1715	536406/245	1907712/625	839523/160
3	Max. motor shaft diameter	mm	4	4		4	3	3	4	3	3	3	3	3
	Part Numbers		166932	166935		166941	166946	166951	166956	166961	166964	166969	166974	166979
1	Reduction		5.8:1	21:1		79:1	132:1	318:1	589:1	1093:1	1526:1	2362:1	3389:1	6285:1
2	Reduction absolute		23/4	299/14		3887/49	3312/25	389376/1225	20631/35	279841/256	9345024/6125	2066688/875	474513/140	6436343/1024
3	Max. motor shaft diameter	mm	3	3		3	3	4	3	3	4	3	3	3
	Part Numbers			166936		166942	166947	166952	166957		166965	166970	166975	
1	Reduction			23:1		86:1	159:1	411:1	636:1		1694:1	2548:1	3656:1	
2	Reduction absolute			576/25		14976/175	1587/10	359424/875	79488/125		1162213/686	7962624/3125	457056/125	
3	Max. motor shaft diameter	mm		4		4	3	4	3		3	4	3	
	Part Numbers			166937		166943	166948	166953	166958		166966	166971	166976	
1	Reduction			28:1		103:1	190:1	456:1	706:1		1828:1	2623:1	4060:1	
2	Reduction absolute			138/5		3588/35	12167/64	89401/196	158171/224		2238912/1225	2056223/784	3637933/896	
3	Max. motor shaft diameter	mm		3		3	3	3	3		3	3	3	
4	Number of stages		1	2	2	3	3	4	4	4	5	5	5	5
5	Max. continuous torque	Nm	1	3	3	6	6	6	6	6	6	6	6	6
6	Intermittently permissible torque at gear output	Nm	1.25	3.75	3.75	7.5	7.5	7.5	7.5	7.5	7.5	7.5	7.5	7.5
7	Max. efficiency	%	80	75	75	70	70	60	60	60	50	50	50	50
8	Weight	g	118	162	162	194	194	226	226	226	258	258	258	258
9	Average backlash no load	°	0.7	0.8	0.8	1.0	1.0	1.0	1.0	1.0	1.0	1.0	1.0	1.0
10	Mass inertia	gcm^2	1.5	0.8	0.8	0.7	0.7	0.7	0.7	0.7	0.7	0.7	0.7	0.7
11	Gearhead length L1	mm	26.5	36.4	36.4	43.1	43.1	49.8	49.8	49.8	56.5	56.5	56.5	56.5

maxon Modular System

+ Motor	Page	+ Sensor/Brake	Page	**Overall length [mm]** = Motor length + gearhead length + (sensor/brake) + assembly parts											
RE-max 29	163-166			71.3	81.2	81.2	87.9	87.9	94.6	94.6	94.6	101.3	101.3	101.3	101.3
RE-max 29	164/166	MR	319	80.1	90.0	90.0	96.7	96.7	103.4	103.4	103.4	110.1	110.1	110.1	110.1
EC 32, 80 W	192			86.6	96.5	96.5	103.2	103.2	109.9	109.9	109.9	116.6	116.6	116.6	116.6
EC 32, 80 W	192	HED_ 5540	326/328	105.0	114.9	114.9	121.6	121.6	128.3	128.3	128.3	135.0	135.0	135.0	135.0
EC 32, 80 W	192	Res 26	337	106.7	116.6	116.6	123.3	123.3	130.0	130.0	130.0	136.7	136.7	136.7	136.7
EC-max 22, 25 W	203			75.1	85.0	85.0	91.7	91.7	98.4	98.4	98.4	105.1	105.1	105.1	105.1
EC-max 22, 25 W	203	MR	318	84.8	94.7	94.7	101.4	101.4	108.1	108.1	108.1	114.8	114.8	114.8	114.8
EC-max 22, 25 W	203	AB 20	370	110.7	120.5	120.5	127.2	127.2	133.9	133.9	133.9	140.6	140.6	140.6	140.6
EC-max 30, 40 W	204			68.9	78.8	78.8	85.5	85.5	92.2	92.2	92.2	98.9	98.9	98.9	98.9
EC-max 30, 40 W	204	MR	319	81.1	91.0	91.0	97.7	97.7	104.4	104.4	104.4	111.1	111.1	111.1	111.1
EC-max 30, 40 W	204	HEDL 5540	328	89.5	99.4	99.4	106.1	106.1	112.8	112.8	112.8	119.5	119.5	119.5	119.5
EC-max 30, 40 W	204	AB 20	370	104.5	114.4	114.4	121.1	121.1	127.8	127.8	127.8	134.5	134.5	134.5	134.5
EC-max 30, 40 W	204	HEDL 5540/AB 20	328/370	125.1	135.0	135.0	141.7	141.7	148.4	148.4	148.4	155.1	155.1	155.1	155.1
EC-max 30, 60 W	205			90.9	100.8	100.8	107.4	107.4	114.7	114.7	114.7	120.8	120.8	120.8	120.8
EC-max 30, 60 W	205	MR	319	103.1	113.0	113.0	119.7	119.7	126.4	126.4	126.4	133.1	133.1	133.1	133.1
EC-max 30, 60 W	205	HEDL 5540	328	111.5	121.4	121.4	128.0	128.0	134.7	134.7	134.7	141.4	141.4	141.4	141.4
EC-max 30, 60 W	205	AB 20	370	126.5	136.4	136.4	143.0	143.0	149.7	149.7	149.7	156.4	156.4	156.4	156.4
EC-max 30, 60 W	205	HEDL 5540/AB 20	328/370	147.9	157.2	157.2	163.8	163.8	170.5	170.5	170.5	177.2	177.2	177.2	177.2
EC-4pole 22, 90 W	211			75.2	85.1	85.1	91.8	91.8	98.5	98.5	98.5	105.2	105.2	105.2	105.2
EC-4pole 22, 90 W	211	HEDL 5540	329	96.7	106.6	106.6	113.3	113.3	120.0	120.0	120.0	126.7	126.7	126.7	126.7
EC-4pole 22, 120 W	212			92.6	102.5	102.5	109.2	109.2	115.9	115.9	115.9	122.6	122.6	122.6	122.6
EC-4pole 22, 120 W	212	HEDL 5540	329	114.1	124.0	124.0	130.7	130.7	137.4	137.4	137.4	144.1	144.1	144.1	144.1
EC 32 flat, 15 W	226			44.5	54.4	54.4	61.1	61.1	67.8	67.8	67.8	74.5	74.5	74.5	74.5
EC 32 flat IE, IP 00	227			54.6	64.5	64.5	71.2	71.2	77.9	77.9	77.9	84.6	84.6	84.6	84.6
EC 32 flat IE, IP 40	227			56.3	66.2	66.2	72.9	72.9	79.6	79.6	79.6	86.3	86.3	86.3	86.3
EC-i 40, 50 W	228			58.3	68.2	68.2	74.9	74.9	81.6	81.6	81.6	88.3	88.3	88.3	88.3
EC-i 40, 50 W	228	16 EASY	320	70.0	79.9	79.9	86.6	86.6	93.3	93.3	93.3	100.0	100.0	100.0	100.0
EC-i 40, 50 W	228	HEDL 5540	329	81.3	91.2	91.2	97.9	97.9	104.6	104.6	104.6	111.3	111.3	111.3	111.3
EC-i 40, 70 W	229			68.3	78.2	78.2	84.9	84.9	91.6	91.6	91.6	98.3	98.3	98.3	98.3
EC-i 40, 70 W	229	16 EASY	320	80.0	89.9	89.9	96.6	96.6	103.3	103.3	103.3	110.0	110.0	110.0	110.0
EC-i 40, 70 W	229	HEDL 5540	329	91.3	101.2	101.2	107.9	107.9	114.6	114.6	114.6	121.3	121.3	121.3	121.3
MCD EPOS, 60 W	367			150.2	160.1	160.1	166.8	166.8	173.5	173.5	173.5	180.2	180.2	180.2	180.2
MCD EPOS P, 60 W	367			150.2	160.1	160.1	166.8	166.8	173.5	173.5	173.5	180.2	180.2	180.2	180.2

Planetary Gearhead GP 32 CR ∅32 mm, 1.0 Nm

for high radial loads, ceramic version

∅6 mm output shaft

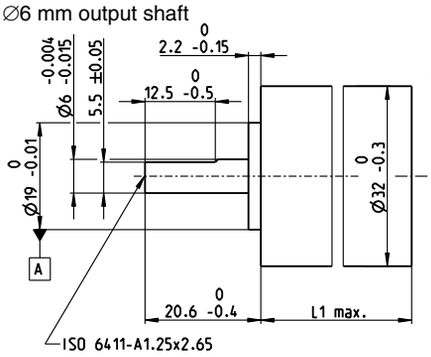

∅8 mm output shaft

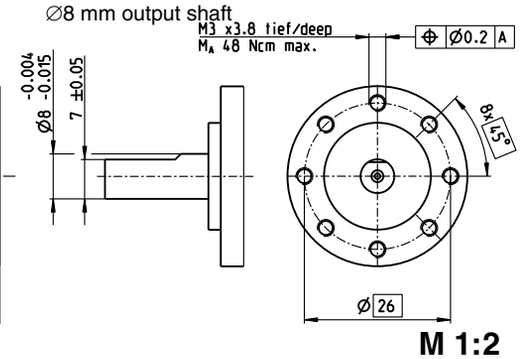

M 1:2

Technical Data

Planetary Gearhead		straight teeth
Output shaft		stainless steel
Bearing at output		ball bearing
Radial play, 5 mm from flange		max. 0.14 mm
Axial play		max. 0.1 mm
Max. permissible axial load		120 N
Max. permissible force for press fits		120 N
Sense of rotation, drive to output		=
Recommended input speed		< 8000 rpm
Recommended temperature range		-40…+100°C
Output shaft diameter	6 mm	8 mm
Max. radial load, 10 mm from flange	140 N	120 N

Stock program
Standard program
Special program (on request)

Part Numbers

			425240	425241	425242
Gearhead Data					
1	Reduction		3.7 : 1	4.8 : 1	5.8 : 1
2	Reduction absolute		26/7	24/5	23/4
3	Max. motor shaft diameter	mm	6	4	3
	Output shaft diameter	mm	6	6	6
	Part Numbers		413746	425160	425161
1	Reduction		3.7 : 1	4.8 : 1	5.8 : 1
2	Reduction absolute		26/7	24/5	23/4
3	Max. motor shaft diameter	mm	6	4	3
	Output shaft diameter	mm	8	8	8
4	Number of stages		1	1	1
5	Max. continuous torque	Nm	1.0	1.0	1.0
6	Intermittently permissible torque at gear output	Nm	1.25	1.25	1.25
7	Max. efficiency	%	90	90	90
8	Weight	g	111	111	111
9	Average backlash no load	°	0.7	0.7	0.7
10	Mass inertia	gcm^2	1.6	0.9	0.6
11	Gearhead length L1	mm	26.2	26.2	26.2

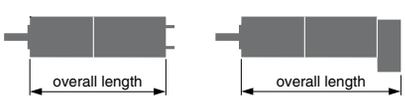

maxon Modular System

+ Motor	Page	+ Sensor/Brake	Page	Overall length [mm] = Motor length + gearhead length + (sensor/brake) + assembly parts		
RE 30, 60 W	111			94.3	94.3	94.3
RE 30, 60 W	111	MR	320	105.7	105.7	105.7
RE 30, 60 W	111	HED_5540	325/329	115.1	115.1	115.1
RE 35, 90 W	112			97.3	97.3	97.3
RE 35, 90 W	112	MR	320	108.7	108.7	108.7
RE 35, 90 W	112	HED_5540	325/329	118.0	118.0	118.0
RE 35, 90 W	112	DCT22	336	115.4	115.4	115.4
RE 35, 90 W	112	AB 28	372	133.4	133.4	133.4
RE 35, 90 W	112	HED_ 5540/AB 28	325/372	150.5	150.5	150.5
EC 32, 80 W	192			86.3	86.3	86.3
EC 32, 80 W	192	HED_5540	326/328	104.7	104.7	104.7
EC 32, 80 W	192	Res 26	337	106.4	106.4	106.4

Planetary Gearhead GP 32 HP ∅32 mm, 4.0–8.0 Nm

High Power

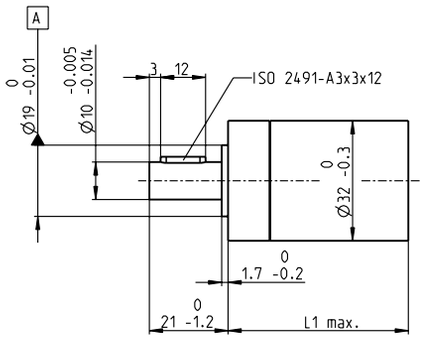

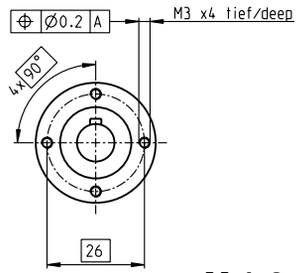

M 1:2

Technical Data

Planetary Gearhead	straight teeth
Output shaft	stainless steel
Bearing at output	ball bearing
Radial play, 10 mm from flange	max. 0.14 mm
Axial play	max. 0.4 mm
Max. permissible axial load	120 N
Max. permissible force for press fits	120 N
Sense of rotation, drive to output	=
Recommended input speed	< 8000 rpm
Recommended temperature range	-40…+100°C
Number of stages	2 3 4
Max. radial load, 10 mm from flange	200 N 250 N 300 N

Stock program
Standard program
Special program (on request)

Gearhead Data

			Part Numbers						
			320247	326663	326664	326668	326672	324947	324952
1	Reduction		14:1	33:1	51:1	111:1	190:1	456:1	706:1
2	Reduction absolute		676/49	529/16	17576/343	13824/125	456976/2401	89401/196	158171/224
3	Max. motor shaft diameter	mm	6	3	6	4	6	3	3
	Part Numbers		326659		326665	326669	324942	324948	324953
1	Reduction		18:1		66:1	123:1	246:1	492:1	762:1
2	Reduction absolute		624/35		16224/245	6877/56	421824/1715	86112/175	19044/25
3	Max. motor shaft diameter	mm	6		6	3	6	6	4
	Part Numbers		326660		326666	326670	324944	324949	324954
1	Reduction		21:1		79:1	132:1	295:1	531:1	913:1
2	Reduction absolute		299/14		3887/49	3312/25	101062/343	331776/625	36501/40
3	Max. motor shaft diameter	mm	6		6	4	6	4	3
	Part Numbers		326661		326667	326671	324945	324950	
1	Reduction		23:1		86:1	159:1	318:1	589:1	
2	Reduction absolute		576/25		14976/175	1587/10	389376/1225	20631/35	
3	Max. motor shaft diameter	mm	4		6	3	6	6	
	Part Numbers		326662		320297		324946	324951	
1	Reduction		28:1		103:1		411:1	636:1	
2	Reduction absolute		138/5		3588/35		359424/875	79488/125	
3	Max. motor shaft diameter	mm	4		6		6	4	
4	Number of stages		2	2	3	3	4	4	4
5	Max. continuous torque	Nm	4	4	8	8	8	8	8
6	Intermittently permissible torque at gear output	Nm	6	6	12	12	12	12	12
7	Max. efficiency	%	75	75	70	70	60	60	60
8	Weight	g	178	178	213	213	249	249	249
9	Average backlash no load	°	0.8	0.8	1.0	1.0	1.0	1.0	1.0
10	Mass inertia	gcm^2	1.6	0.5	1.5	0.7	1.5	1.5	0.7
11	Gearhead length L1	mm	48.3	48.3	55.0	55.0	61.7	61.7	61.7

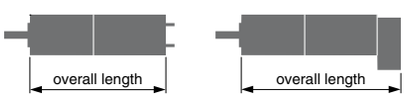

maxon Modular System

+ Motor	Page	+ Sensor/Brake	Page	Overall length [mm] = Motor length + gearhead length + (sensor/brake) + assembly parts						
RE 35, 90 W	112			119.4	119.4	126.1	126.1	132.8	132.8	132.8
RE 35, 90 W	112	MR	320	130.8	130.8	137.5	137.5	144.2	144.2	144.0
RE 35, 90 W	112	HED_ 5540	325/327	140.1	140.1	146.8	146.8	153.5	153.5	153.5
RE 35, 90 W	112	DCT 22	336	137.5	137.5	144.2	144.2	150.9	150.9	150.9
RE 35, 90 W	112	AB 28	372	155.5	155.5	162.2	162.2	168.9	168.9	168.9
RE 35, 90 W	112	HEDS 5540/AB 28	325/372	172.7	172.7	179.4	179.4	186.1	186.1	186.1
EC-max 30, 40 W	204			90.2	90.2	96.9	96.9	103.6	103.6	103.6
EC-max 30, 40 W	204	MR	319	102.4	102.4	109.1	109.1	115.8	115.8	115.8
EC-max 30, 40 W	204	HEDL 5540	328	110.8	110.8	117.5	117.5	124.2	124.2	124.2
EC-max 30, 40 W	204	AB 20	370	125.8	125.8	132.5	132.5	139.2	139.2	139.2
EC-max 30, 40 W	204	HEDL 5540/AB 20	328/370	146.4	146.4	153.1	153.1	159.8	159.8	159.8
EC-max 30, 60 W	205			112.2	112.2	118.9	118.9	125.6	125.6	125.6
EC-max 30, 60 W	205	MR	319	124.4	124.4	131.1	131.1	137.8	137.8	137.8
EC-max 30, 60 W	205	HEDL 5540	328	132.8	132.8	139.5	139.5	146.2	146.2	146.2
EC-max 30, 60 W	205	AB 20	370	147.8	147.8	154.5	154.5	161.2	161.2	161.2
EC-max 30, 60 W	205	HEDL 5540/AB 20	370	168.4	168.4	175.1	175.1	181.8	181.8	181.8
EC-4pole 30, 100 W	213			95.2	95.2	101.9	101.9	108.6	108.6	108.6
EC-4pole 30, 100 W	213	MR	319	107.4	107.4	114.1	114.1	120.8	120.8	120.8
EC-4pole 30, 100 W	213	HEDL 5540	329	115.8	115.8	122.5	122.5	129.2	129.2	129.2
EC-4pole 30, 100 W	213	AB 20	370	131.4	131.4	138.1	138.1	144.8	144.8	144.8
EC-4pole 30, 100 W	213	HEDL 5540/AB 20	329/370	152.2	152.2	158.9	158.9	165.6	165.6	165.6
EC-4pole 30, 200 W	214			112.2	112.2	118.9	118.9	125.6	125.6	125.6
EC-4pole 30, 200 W	214	MR	319	124.4	124.4	131.1	131.1	137.8	137.8	137.8
EC-4pole 30, 200 W	214	HEDL 5540	329	132.8	132.8	139.5	139.5	146.2	146.2	146.2
EC-4pole 30, 200 W	214	AB 20	370	148.4	148.4	155.1	155.1	161.8	161.8	161.8
EC-4pole 30, 200 W	214	HEDL 5540/AB 20	329/370	169.2	169.2	175.9	175.9	182.6	182.6	182.6
MCD EPOS, 60 W	367			168.2	168.2	174.9	174.9	181.6	181.6	181.6
MCD EPOS P, 60 W	367			168.2	168.2	174.9	174.9	181.6	181.6	181.6

Planetary Gearhead GP 32 HD ∅32 mm, 3.0–8.0 Nm

Heavy Duty – for application in oil

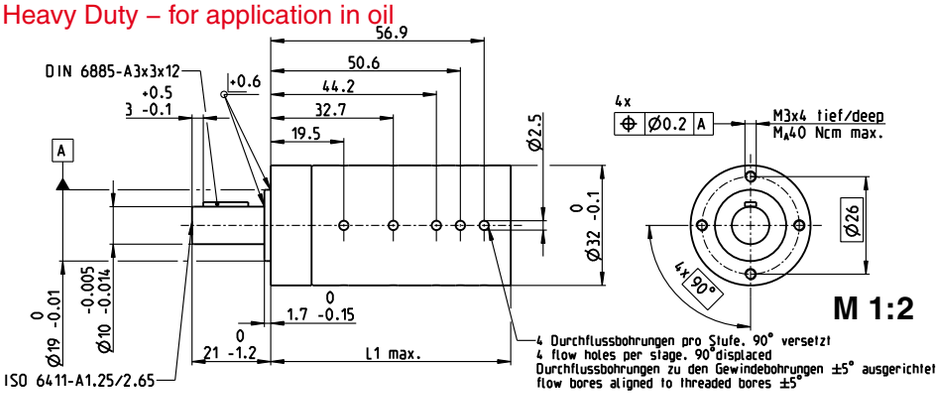

Technical Data

Planetary Gearhead	straight teeth
Output shaft	stainless steel
Bearing at output	ball bearing
Radial play, 10 mm from flange	max. 0.14 mm
Axial play	max. 0.4 mm
Max. permissible axial load	120 N
Max. permissible force for press fits	120 N
Sense of rotation, drive to output	=
Recommended input speed	< 8000 rpm
Recommended temperature range	-55...+200°C
Extended range as option	-55...+260°C
Number of stages	1 2 3 4 5
Max. radial load, 10 mm from flange	120 N 200 N 250 N 300 N 300 N

Stock program
Standard program
Special program (on request)

Part Numbers

			416962	416930	416461	420735*	416984	420743	426072	426130	426135	426141
Gearhead Data (provisional)												
1	Reduction		3.7 : 1	14 : 1	51 : 1	123 : 1	190 : 1	492 : 1	707 : 1	1694 : 1	2548 : 1	4060 : 1
2	Reduction absolute		26/7	676/49	17576/343	6877/56	456976/2401	86112/175	11881376/16807	1162213/686	7962624/3125	3637933/896
3	Max. motor shaft diameter	mm	6	6	6	3	6	6	6	6	4	6
	Part Numbers		420518	420725	420730	420736	420738	420744	426125	426131	426136	426142
1	Reduction		4.8 : 1	18 : 1	66 : 1	132 : 1	246 : 1	531 : 1	914 : 1	1828 : 1	2623 : 1	4380 : 1
2	Reduction absolute		24/5	624/35	16224/245	3312/25	421824/1715	331776/625	10967424/12005	2238912/1225	2056223/784	109503/25
3	Max. motor shaft diameter	mm	4	6	6	4	6	4	6	6	6	4
	Part Numbers		420724*	420726	420731	420737*	420739	420745	426126	426132	426137	426143
1	Reduction		5.8 : 1	21 : 1	79 : 1	159 : 1	295 : 1	589 : 1	1094 : 1	1972 : 1	2829 : 1	5247 : 1
2	Reduction absolute		23/4	299/14	3887/49	1587/10	101062/343	20631/35	2627612/2401	8626176/4375	495144/175	839523/160
3	Max. motor shaft diameter	mm	3	6	6	3	6	6	6	4	6	4
	Part Numbers			420727	420732		420740	420746	426127	426133	426138	426144*
1	Reduction			23 : 1	86 : 1		318 : 1	636 : 1	1181 : 1	2189 : 1	3052 : 1	6285 : 1
2	Reduction absolute			576/25	14976/175		389376/1225	79488/125	10123776/8575	536406/245	1907712/625	6436343/1024
3	Max. motor shaft diameter	mm		4	6		6	4	6	6	4	3
	Part Numbers			420728	420733		420741	420748	426128	426134	426139	
1	Reduction			28 : 1	103 : 1		411 : 1	762 : 1	1414 : 1	2362 : 1	3389 : 1	
2	Reduction absolute			138/5	3588/35		359424/875	19044/25	2425488/1715	2066688/875	474513/140	
3	Max. motor shaft diameter	mm		4	6		6	4	6	6	6	
	Part Numbers			420729*	420734		420742		426129		426140	
1	Reduction			33 : 1	111 : 1		456 : 1		1526 : 1		3656 : 1	
2	Reduction absolute			529/16	13824/125		89401/196		9345024/6125		457056/125	
3	Max. motor shaft diameter	mm		3	4		6		4		4	
4	Number of stages		1	2	3	3	4	4	5	5	5	5
5	Max. continuous torque	Nm	3	4	8	8	8	8	8	8	8	8
6	Intermittently permissible torque at gear output	Nm	4.5	6	12	12	12	12	12	12	12	12
15	Max. overload torque[1)]	Nm	9	12	24	24	24	24	24	24	24	24
7	Max. efficiency	%	95	87	78	78	65	65	53	53	53	53
8	Weight	g	170	228	271	271	303	303	334	334	334	334
9	Average backlash no load	°	0.7	0.8	1.0	1.0	1.0	1.0	1.0	1.0	1.0	1.0
10	Mass inertia	gcm^2	1.59	1.59	1.45	1.45	1.45	1.45	1.45	1.45	1.45	1.45
11	Gearhead length L1	mm	29.0	41.4	51.2	51.2	57.7	57.7	64.2	64.2	64.2	64.2
13	Max. transmittable continuous power	W	320	200	80	80	40	40	12	12	12	12
14	Max. transmittable intermittent power	W	480	300	120	120	60	60	18	18	18	18

1) Reduced lift time expectancy

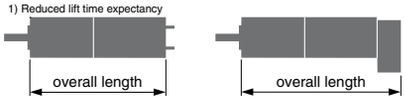

maxon Modular System

+ Motor	Page	+ Sensor/Brake	Page	Overall length [mm] = Motor length + gearhead length + (sensor/brake) + assembly parts									
EC 32 HD oil, A	216			194.0	206.5	216.5	216.5	223.0	223.0	229.5	229.5	229.5	229.5
EC 32 HD oil, B				174.0	186.5	196.5	196.5	203.0	203.0	209.5	209.5	209.5	209.5

*Overall length + 2 mm

Application

General
- extreme temperature applications
- vibration tested according to MIL-STD810F/ Jan2000 Fig. 514.5C-10
- operation in oil and high pressure

Oil & Gas Industry
- oil, gas and geothermal wells

Important Notice

This gearhead has been designed for applications in oil and is only equipped with minimum lubrication. Therefore it is not permitted to use it under normal air conditions.

Koaxdrive KD 32 ∅32 mm, 1.0–4.5 Nm

Low Noise

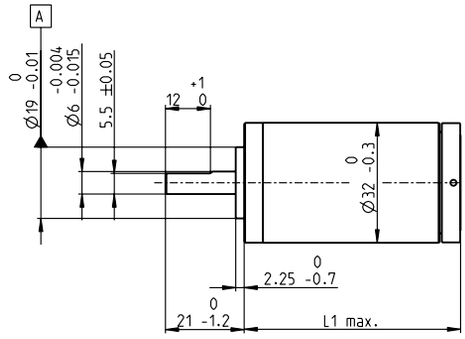

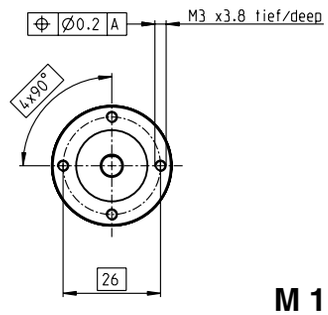

M 1:2

Technical Data

Planetary Gearhead	special toothing
Output shaft	stainless steel
Bearing at output	ball bearing
Radial play, 5 mm from flange	max. 0.14 mm
Axial play	max. 0.4 mm
Max. permissible axial load	120 N
Max. permissible force for press fits	120 N
Sense of rotation, drive to output	=
Recommended input speed	< 8000 rpm
Recommended temperature range	-15...+80°C
Number of stages	1 2 3
Max. radial load, 10 mm from flange	90 N 140 N 200 N

Option: higher reduction ratio on request

Stock program
Standard program
Special program (on request)

Part Numbers

			354722	354725	354962	354730	354731	354734	354737	354963	354742
Gearhead Data											
1	Reduction		11:1	41:1	82:1	158:1	152:1	253:1	392:1	705:1	1091:1
2	Reduction absolute		11/1	286/7	408/5	792/5	7436/49	6336/25	9792/25	9867/14	17457/16
7	Max. efficiency	%	78	70	65	61	63	63	59	55	55
10	Mass inertia	gcm²	0.65	0.60	0.60	0.35	0.60	0.60	0.35	0.35	0.22
	Part Numbers		354723	354726	354728	354744	354732	354735	354738	354740	
1	Reduction		17:1	53:1	98:1	190:1	196:1	304:1	455:1	760:1	
2	Reduction absolute		17/1	264/5	391/4	759/4	6864/35	1518/5	22308/49	19008/25	
7	Max. efficiency	%	72	70	65	65	63	63	55	55	
10	Mass inertia	gcm²	0.38	0.60	0.35	0.35	0.60	0.60	0.22	0.22	
	Part Numbers		354724	354727	354729		354733	354736	354739	354741	
1	Reduction		33:1	63:1	123:1		235:1	364:1	588:1	911:1	
2	Reduction absolute		33/1	442/7	858/7		11492/49	5819/16	20592/35	4554/5	
7	Max. efficiency	%	68	70	61		63	63	59	55	
10	Mass inertia	gcm²	0.65	0.60	0.22		0.60	0.60	0.35	0.22	
3	Max. motor shaft diameter	mm	3	3	3	3	3	3	3	3	3
4	Number of stages		1	2	2	2	3	3	3	3	3
5	Max. continuous torque	Nm	1	3.5	3.5	3.5	4.5	4.5	4.5	4.5	4.5
6	Intermittently permissible torque at gear output	Nm	1.25	4.4	4.4	4.4	6.5	6.5	6.5	6.5	6.5
8	Weight	g	130	230	230	230	262	262	262	262	262
9	Average backlash no load	°	3.5	1	1	1	1	1	1	1	1
11	Gearhead length L1	mm	40.7	57.9	57.9	57.9	67.6	67.6	67.6	67.6	67.6

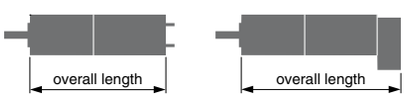

maxon Modular System

+ Motor	Page	+ Sensor/Brake	Page	Overall length [mm] = Motor length + gearhead length + (sensor/brake) + assembly parts								
RE 25	107/109			95.3	112.5	112.5	112.5	122.2	122.2	122.2	122.2	122.2
RE 25	107/109	MR	319	106.3	123.5	123.5	123.5	133.2	133.2	133.2	133.2	133.2
RE 25	107/109	Enc 22	324	109.4	126.6	126.6	126.6	136.3	136.3	136.3	136.3	136.3
RE 25	107/109	HED_5540	325/327	116.1	133.3	133.3	133.3	143.0	143.0	143.0	143.0	143.0
RE 25	107/109	DCT 22	336	117.6	134.8	134.8	134.8	144.5	144.5	144.5	144.5	144.5
RE 25, 20 W	108			83.8	101.0	101.0	101.0	110.7	110.7	110.7	110.7	110.7
RE 25, 20 W	108	MR	319	94.8	112.0	112.0	112.0	121.7	121.7	121.7	121.7	121.7
RE 25, 20 W	108	HED_5540	326/329	104.6	121.8	121.8	121.8	131.5	131.5	131.5	131.5	131.5
RE 25, 20 W	108	DCT 22	336	106.1	123.3	123.3	123.3	133.0	133.0	133.0	133.0	133.0
RE 25, 20 W	108	AB 28	372	117.9	135.1	135.1	135.1	144.8	144.8	144.8	144.8	144.8
RE 25, 20 W	108	HED_5540/AB 28	326/372	135.1	152.3	152.3	152.3	162.0	162.0	162.0	162.0	162.0
RE 30, 60 W	111			108.8	126.0	126.0	126.0	135.7	135.7	135.7	135.7	135.7
RE 30, 60 W	111	MR	320	120.2	137.4	137.4	137.4	147.1	147.1	147.1	147.1	147.1
RE 30, 60 W	111	HEDL 5540	328	129.6	146.8	146.8	146.8	156.5	156.5	156.5	156.5	156.5
EC-max 22, 12 W	202			72.8	90.0	90.0	90.0	99.7	99.7	99.7	99.7	99.7
EC-max 22, 12 W	202	MR	318	82.4	99.6	99.6	99.6	109.3	109.3	109.3	109.3	109.3
EC-max 22, 12 W	202	AB 20	370	108.4	125.6	125.6	125.6	135.3	135.3	135.3	135.3	135.3
EC-max 22, 25 W	203			89.3	106.5	106.5	106.5	116.2	116.2	116.2	116.2	116.2
EC-max 22, 25 W	203	MR	318	98.9	116.1	116.1	116.1	125.8	125.8	125.8	125.8	125.8
EC-max 22, 25 W	203	AB 20	370	125.0	142.2	142.2	142.2	151.9	151.9	151.9	151.9	151.9
EC-max 30, 40 W	204			82.8	100.0	100.0	100.0	109.7	109.7	109.7	109.7	109.7
EC-max 30, 40 W	204	MR	319	95.0	112.2	112.2	112.2	121.9	121.9	121.9	121.9	121.9
EC-max 30, 40 W	204	HEDL 5540	328	103.4	120.6	120.6	120.6	130.3	130.3	130.3	130.3	130.3
EC-max 30, 40 W	204	AB 20	370	118.4	135.6	135.6	135.6	145.3	145.3	145.3	145.3	145.3
EC-max 30, 40 W	204	HEDL 5540/AB 20	328/370	139.2	156.2	156.2	156.2	165.7	165.7	165.7	165.7	165.7
EC-max 30, 60 W	205			104.8	122.0	122.0	122.0	131.7	131.7	131.7	131.7	131.7
EC-max 30, 60 W	205	MR	319	117.0	134.2	134.2	134.2	143.9	143.9	143.9	143.9	143.9
EC-max 30, 60 W	205	HEDL 5540	328	125.4	142.6	142.6	142.6	152.3	152.3	152.3	152.3	152.3
EC-max 30, 60 W	205	AB 20	370	140.4	157.6	157.6	157.6	167.3	167.3	167.3	167.3	167.3
EC-max 30, 60 W	205	HEDL 5540/AB 20	328/370	161.2	178.2	178.2	178.2	187.7	187.7	187.7	187.7	187.7

Spur Gearhead GS 38 A ∅38 mm, 0.1–0.6 Nm

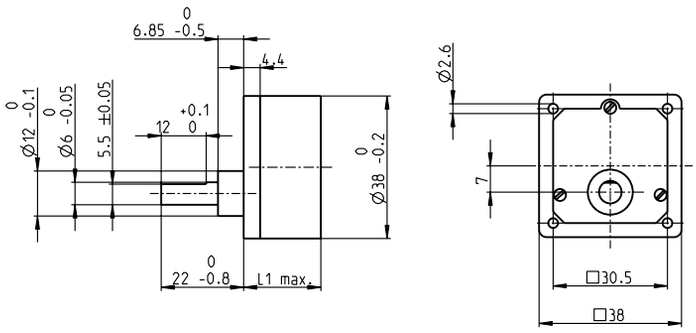

M 1:2

Technical Data

Spur Gearhead					straight teeth
Output shaft					stainless steel
Bearing at output					sleeve bearing
Radial play, 12 mm from flange					max. 0.1 mm
Axial play					0.03–0.2 mm
Max. permissible axial load					30 N
Max. permissible force for press fits					500 N
Recommended input speed					< 5000 rpm
Recommended temperature range					-5…+80°C
Number of stages	1	2	3	4	5
Max. radial load, 12 mm from flange	50 N	50 N	50 N	50 N	50 N

Stock program
Standard program
Special program (on request)

Part Numbers

			110451	110452	110453	110454	110455	110456	110457	110458	110459
Gearhead Data											
1	Reduction		6:1	10:1	18:1	30:1	60:1	100:1	200:1	500:1	900:1
2	Reduction absolute		6	10	18	30	60	100	200	500	900
3	Max. motor shaft diameter	mm	3	3	3	3	3	3	3	3	3
4	Number of stages		2	2	3	3	4	4	5	6	6
5	Max. continuous torque	Nm	0.1	0.1	0.2	0.2	0.3	0.3	0.6	0.6	0.6
6	Intermittently permissible torque at gear output	Nm	0.3	0.3	0.6	0.6	0.9	0.9	1.8	1.8	1.8
12	Sense of rotation, drive to output		=	=	≠	≠	=	=	≠	=	=
7	Max. efficiency	%	81	81	73	73	66	66	59	53	53
8	Weight	g	55	55	60	60	65	65	70	75	75
9	Average backlash no load	°	1.0	1.0	1.5	1.5	2.0	2.0	2.5	3.0	3.0
10	Mass inertia	gcm^2	0.7	0.6	0.4	0.4	0.3	0.3	0.2	0.2	0.2
11	Gearhead length L1*	mm	20.6	20.6	23.1	23.1	25.6	25.6	28.1	30.6	30.6

*for EC 32 flat L1 is + 2.0 mm

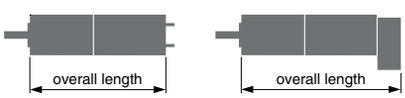

maxon Modular System

+ Motor	Page	+ Sensor/Brake	Page	**Overall length [mm]** = Motor length + gearhead length + (sensor/brake) + assembly parts								
A-max 26	133-140			65.4	65.4	67.9	67.9	70.4	70.4	72.9	75.4	75.4
A-max 26	134-140	MEnc 13	335	72.5	72.5	75.0	75.0	77.5	77.5	80.0	82.5	82.5
A-max 26	134-140	MR	319	74.2	74.2	76.7	76.7	79.2	79.2	81.7	84.2	84.2
A-max 26	134-140	Enc 22	324	79.8	79.8	82.3	82.3	84.8	84.8	87.3	89.8	89.8
A-max 26	134-140	HED_ 5540	326/327	83.8	83.8	86.3	86.3	88.8	88.8	91.3	93.8	93.8
A-max 32	141/143			83.6	83.6	86.1	86.1	88.6	88.6	91.1	93.6	93.6
A-max 32	142/144			82.2	82.2	84.7	84.7	87.2	87.2	89.7	92.2	92.2
A-max 32	142/144	MR	320	93.4	93.4	95.9	95.9	98.4	98.4	100.9	103.4	103.4
A-max 32	142/144	HED_ 5540	326/327	103.0	103.0	105.5	105.5	108.0	108.0	110.5	113.0	113.0
RE-max 21	155/156			49.6	49.6	52.1	52.1	54.6	54.6	57.1	59.6	59.6
RE-max 21, 3.5 W	156	MR	316/318	54.7	54.7	57.2	57.2	59.7	59.7	62.2	64.7	64.7
RE-max 21	157/158			52.2	52.2	54.7	54.7	57.2	57.2	59.7	62.2	62.2
RE-max 21, 6 W	158	MR	316/318	56.5	56.5	59.0	59.0	61.5	61.5	64.0	66.5	66.5
RE-max 24	159-162			52.6	52.6	55.1	55.1	57.6	57.6	60.1	62.6	62.6
RE-max 24	160/162	MR	316/318	57.6	57.6	60.1	60.1	62.6	62.6	65.1	67.6	67.6
EC 32 flat, 15 W	226			38.6	38.6	41.1	41.1	43.6	43.6	46.1	48.6	48.6
EC 32 flat, IE, IP 00	227			48.7	48.7	51.2	51.2	53.7	53.7	56.2	58.7	58.7
EC 32 flat, IE, IP 40	227			50.4	50.4	52.9	52.9	55.4	55.4	57.9	60.4	60.4

Planetary Gearhead GP 42 C ∅42 mm, 3–15 Nm

Ceramic Version

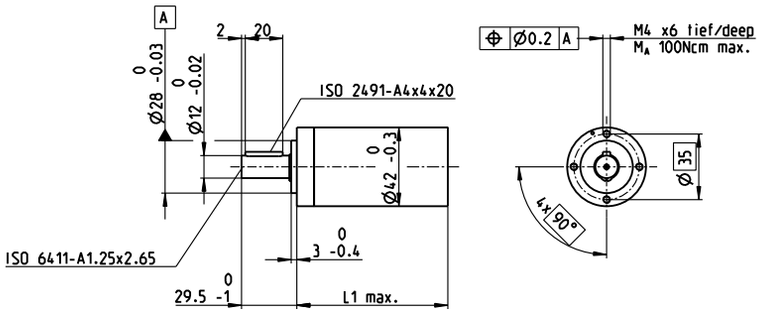

M 1:4

Technical Data

Planetary Gearhead				straight teeth
Output shaft				stainless steel
Bearing at output				preloaded ball bearings
Radial play, 12 mm from flange				max. 0.06 mm
Axial play at axial load	< 5 N			0 mm
	> 5 N			max. 0.3 mm
Max. permissible axial load				150 N
Max. permissible force for press fits				300 N
Sense of rotation, drive to output				=
Recommended input speed				< 8000 rpm
Recommended temperature range				-40…+100°C
Number of stages	1	2	3	4
Max. radial load, 12 mm from flange	120 N	240 N	360 N	360 N

Stock program
Standard program
Special program (on request)

			Part Numbers									
			203113	203115	203119	203120	203124	203129	203128	203133	203137	203141
Gearhead Data												
1	Reduction		3.5:1	12:1	26:1	43:1	81:1	156:1	150:1	285:1	441:1	756:1
2	Reduction absolute		7/2	49/4	26	343/8	2197/27	156	2401/16	15379/54	441	756
10	Mass inertia	gcm²	14	15	9.1	15	9.4	9.1	15	15	14	14
3	Max. motor shaft diameter	mm	10	10	8	10	8	8	10	10	10	10
	Part Numbers		203114	203116	260552*	203121	203125	260553*	203130	203134	203138	203142
1	Reduction		4.3:1	15:1	36:1	53:1	91:1	216:1	186:1	319:1	488:1	936:1
2	Reduction absolute		13/3	91/6	36/1	637/12	91	216/1	4459/24	637/2	4394/9	936
10	Mass inertia	gcm²	9.1	15	5.0	15	15	5.0	15	15	9.4	9.1
3	Max. motor shaft diameter	mm	8	10	4	10	10	4	10	10	8	8
	Part Numbers		260551*	203117		203122	203126		203131	203135	203139	260554*
1	Reduction		6:1	19:1		66:1	113:1		230:1	353:1	546:1	1296:1
2	Reduction absolute		6/1	169/9		1183/18	338/3		8281/36	28561/81	546	1296/1
10	Mass inertia	gcm²	4.9	9.4		15	9.4		15	9.4	14	5.0
3	Max. motor shaft diameter	mm	4	8		10	8		10	8	10	4
	Part Numbers			203118		203123	203127		203132	203136	203140	
1	Reduction			21:1		74:1	126:1		257:1	394:1	676:1	
2	Reduction absolute			21		147/2	126		1029/4	1183/3	676	
10	Mass inertia	gcm²		14		15	14		15	15	9.1	
3	Max. motor shaft diameter	mm		10		10	10		10	10	8	
4	Number of stages		1	2	2	3	3	3	4	4	4	4
5	Max. continuous torque	Nm	3.0	7.5	7.5	15.0	15.0	15.0	15.0	15.0	15.0	15.0
6	Intermittently permissible torque at gear output	Nm	4.5	11.3	11.3	22.5	22.5	22.5	22.5	22.5	22.5	22.5
7	Max. efficiency	%	90	81	81	72	72	72	64	64	64	64
8	Weight	g	260	360	360	460	460	460	560	560	560	560
9	Average backlash no load	°	0.6	0.8	0.8	1.0	1.0	1.0	1.0	1.0	1.0	1.0
11	Gearhead length L1	mm	41.0	55.5	55.5	70.0	70.0	70.0	84.5	84.5	84.5	84.5

*no combination with EC 45 (150 W and 250 W)

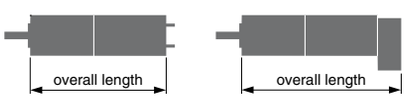

maxon Modular System

+ Motor	Page	+ Sensor	Page	Brake	Page	Overall length [mm] = Motor length + gearhead length + (sensor/brake) + assembly parts									
RE 35, 90 W	112					112.1	126.6	126.6	141.1	141.1	141.1	155.6	155.6	155.6	155.6
RE 35, 90 W	112	MR	320			123.5	138.0	138.0	152.5	152.5	152.5	167.0	167.0	167.0	167.0
RE 35, 90 W	112	HED_ 5540	325/327			132.8	147.3	147.3	161.8	161.8	161.8	176.3	176.3	176.3	176.3
RE 35, 90 W	112	DCT 22	336			130.2	144.7	144.7	159.2	159.2	159.2	173.7	173.7	173.7	173.7
RE 35, 90 W	112			AB 28	372	148.2	162.7	162.7	177.2	177.2	177.2	191.7	191.7	191.7	191.7
RE 35, 90 W	112	HED_ 5540	325/327	AB 28	372	165.4	179.9	179.9	194.4	194.4	194.4	208.9	208.9	208.9	208.9
RE 40, 150 W	114					112.1	126.6	126.6	141.1	141.1	141.1	155.6	155.6	155.6	155.6
RE 40, 150 W	114	MR	320			123.5	138.0	138.0	152.5	152.5	152.5	167.0	167.0	167.0	167.0
RE 40, 150 W	114	HED_ 5540	325/327			132.8	147.3	147.3	161.8	161.8	161.8	176.3	176.3	176.3	176.3
RE 40, 150 W	114	HEDL 9140	331			166.2	180.7	180.7	195.2	195.2	195.2	209.7	209.7	209.7	209.7
RE 40, 150 W	114			AB 28	372	148.2	162.7	162.7	177.2	177.2	177.2	191.7	191.7	191.7	191.7
RE 40, 150 W	114			AB 28	373	156.2	170.7	170.7	185.2	185.2	185.2	199.7	199.7	199.7	199.7
RE 40, 150 W	114	HED_ 5540	325/327	AB 28	372	165.4	179.9	179.9	194.4	194.4	194.4	208.9	208.9	208.9	208.9
RE 40, 150 W	114	HEDL 9140	331	AB 28	373	176.7	191.2	191.2	205.7	205.7	205.7	220.2	220.2	220.2	220.2
EC 40, 170 W	193					121.1	135.6	135.6	150.1	150.1	150.1	164.6	164.6	164.6	164.6
EC 40, 170 W	193	HED_ 5540	326/328			144.5	159.0	159.0	175.5	175.5	175.5	188.0	188.0	188.0	188.0
EC 40, 170 W	193	Res 26	337			148.3	162.8	162.8	177.3	177.3	177.3	191.8	191.8	191.8	191.8
EC 40, 170 W	193			AB 32	374	163.8	178.3	178.3	192.8	192.8	192.8	207.3	207.3	207.3	207.3
EC 40, 170 W	193	HED_ 5540	326/328	AB 32	374	182.2	196.7	196.7	211.2	211.2	211.2	225.7	225.7	225.7	225.7
EC 45, 150 W	194					152.3	166.8	166.8	181.3	181.3	181.3	195.8	195.8	195.8	195.8
EC 45, 150 W	194	HEDL 9140	331			167.9	182.4	182.4	196.9	196.9	196.9	211.4	211.4	211.4	211.4
EC 45, 150 W	194	Res 26	337			152.3	166.8	166.8	181.3	181.3	181.3	195.8	195.8	195.8	195.8
EC 45, 150 W	194			AB 28	373	159.7	174.2	174.2	188.7	188.7	188.7	203.2	203.2	203.2	203.2
EC 45, 150 W	194	HEDL 9140	331	AB 28	373	176.7	191.2	191.2	205.7	205.7	205.7	220.2	220.2	220.2	220.2
EC 45, 250 W	195					185.1	199.6	199.6	214.1	214.1	214.1	228.6	228.6	228.6	228.6
EC 45, 250 W	195	HEDL 9140	331			200.7	215.2	215.2	229.7	229.7	229.7	244.2	244.2	244.2	244.2
EC 45, 250 W	195	Res 26	337			185.1	199.6	199.6	214.1	214.1	214.1	228.6	228.6	228.6	228.6
EC 45, 250 W	195			AB 28	373	192.5	207.0	207.0	221.5	221.5	221.5	236.0	236.0	236.0	236.0
EC 45, 250 W	195	HEDL 9140	331	AB 28	373	209.5	224.0	224.0	238.5	238.5	238.5	253.0	253.0	253.0	253.0

Planetary Gearhead GP 42 C ∅42 mm, 3–15 Nm

Ceramic Version

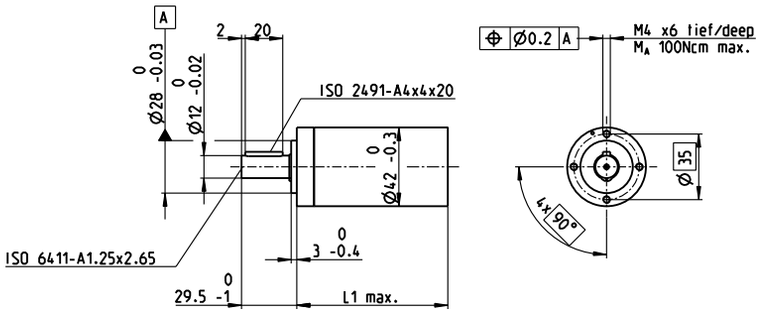

M 1:4

Technical Data

Planetary Gearhead				straight teeth
Output shaft				stainless steel
Bearing at output				preloaded ball bearings
Radial play, 12 mm from flange				max. 0.06 mm
Axial play at axial load	< 5 N			0 mm
	> 5 N			max. 0.3 mm
Max. permissible axial load				150 N
Max. permissible force for press fits				300 N
Sense of rotation, drive to output				=
Recommended input speed				< 8000 rpm
Recommended temperature range				-40...+100°C
Number of stages	1	2	3	4
Max. radial load, 12 mm from flange	120 N	240 N	360 N	360 N

Stock program
Standard program
Special program (on request)

			Part Numbers									
			203113	203115	203119	203120	203124	203129	203128	203133	203137	203141
Gearhead Data												
1	Reduction		3.5:1	12:1	26:1	43:1	81:1	156:1	150:1	285:1	441:1	756:1
2	Reduction absolute		7/2	49/4	26	343/8	2197/27	156	2401/16	15379/54	441	756
10	Mass inertia	gcm²	14	15	9.1	15	9.4	9.1	15	15	14	14
3	Max. motor shaft diameter	mm	10	10	8	10	8	8	10	10	10	10
	Part Numbers		203114	203116	260552*	203121	203125	260553*	203130	203134	203138	203142
1	Reduction		4.3:1	15:1	36:1	53:1	91:1	216:1	186:1	319:1	488:1	936:1
2	Reduction absolute		13/3	91/6	36/1	637/12	91	216/1	4459/24	637/2	4394/9	936
10	Mass inertia	gcm²	9.1	15	5.0	15	15	5.0	15	15	9.4	9.1
3	Max. motor shaft diameter	mm	8	10	4	10	10	4	10	10	8	8
	Part Numbers		260551*	203117		203122	203126		203131	203135	203139	260554*
1	Reduction		6:1	19:1		66:1	113:1		230:1	353 :1	546:1	1296:1
2	Reduction absolute		6/1	169/9		1183/18	338/3		8281/36	28561/81	546	1296/1
10	Mass inertia	gcm²	4.9	9.4		15	9.4		15	9.4	14	5.0
3	Max. motor shaft diameter	mm	4	8		10	8		10	8	10	4
	Part Numbers			203118		203123	203127		203132	203136	203140	
1	Reduction			21:1		74:1	126:1		257:1	394:1	676:1	
2	Reduction absolute			21		147/2	126		1029/4	1183/3	676	
10	Mass inertia	gcm²		14		15	14		15	15	9.1	
3	Max. motor shaft diameter	mm		10		10	10		10	10	8	
4	Number of stages		1	2	2	3	3	3	4	4	4	4
5	Max. continuous torque	Nm	3.0	7.5	7.5	15.0	15.0	15.0	15.0	15.0	15.0	15.0
6	Intermittently permissible torque at gear output	Nm	4.5	11.3	11.3	22.5	22.5	22.5	22.5	22.5	22.5	22.5
7	Max. efficiency	%	90	81	81	72	72	72	64	64	64	64
8	Weight	g	260	360	360	460	460	460	560	560	560	560
9	Average backlash no load	°	0.6	0.8	0.8	1.0	1.0	1.0	1.0	1.0	1.0	1.0
11	Gearhead length L1**	mm	41.0	55.5	55.5	70.0	70.0	70.0	84.5	84.5	84.5	84.5

*no combination with EC-i 40 (50 W and 70 W)

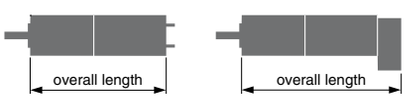

maxon Modular System

+ Motor	Page	+ Sensor	Page	Brake	Page	Overall length [mm] = Motor length + gearhead length + (sensor/brake) + assembly parts									
EC-max 30, 60 W	205					105.1	119.6	119.6	134.1	134.1	134.1	148.6	148.6	148.6	148.6
EC-max 30, 60 W	205	MR	319			117.3	131.8	131.8	146.3	146.3	146.3	160.8	160.8	160.8	160.8
EC-max 30, 60 W	205	HEDL 5540	328			125.7	140.2	140.2	154.7	154.7	154.7	169.2	169.2	169.2	169.2
EC-max 30, 60 W	205			AB 20	370	141.2	155.1	155.1	169.6	169.6	169.6	184.1	184.1	184.1	184.1
EC-max 30, 60 W	205	HEDL 5540	328	AB 20	370	161.4	175.9	175.9	190.4	190.4	190.4	204.9	204.9	204.9	204.9
EC-max 40, 70 W	206					99.1	113.6	113.6	128.1	128.1	128.1	142.6	142.6	142.6	142.6
EC-max 40, 70 W	206	MR	320			115.0	129.5	129.5	144.0	144.0	144.0	158.5	158.5	158.5	158.5
EC-max 40, 70 W	206	HEDL 5540	328			122.5	137.0	137.0	151.5	151.5	151.5	166.0	166.0	166.0	166.0
EC-max 40, 70 W	206			AB 28	371	133.4	147.9	147.9	162.4	162.4	162.4	176.9	176.9	176.9	176.9
EC-max 40, 70 W	206	HEDL 5540	328	AB 28	371	151.7	166.2	166.2	180.7	180.7	180.7	195.2	195.2	195.2	195.2
EC-4pole 30, 100 W	213					88.1	102.6	102.6	117.1	117.1	117.1	131.6	131.6	131.6	131.6
EC-4pole 30, 100 W	213	MR	319			100.3	114.8	114.8	129.3	129.3	129.3	143.8	143.8	143.8	143.8
EC-4pole 30, 100 W	213	HEDL 5540	329			108.7	123.2	123.2	137.7	137.7	137.7	152.2	152.2	152.2	152.2
EC-4pole 30, 100 W	213			AB 20	370	124.3	138.8	138.8	153.3	153.3	153.3	167.8	167.8	167.8	167.8
EC-4pole 30, 100 W	213	HEDL 5540	329	AB 20	370	145.1	159.6	159.6	174.1	174.1	174.1	188.6	188.6	188.6	188.6
EC-4pole 30, 200 W	214					105.1	119.6	119.6	134.1	134.1	134.1	148.6	148.6	148.6	148.6
EC-4pole 30, 200 W	214	MR	319			117.3	131.8	131.8	146.3	146.3	146.3	160.8	160.8	160.8	160.8
EC-4pole 30, 200 W	214	HEDL 5540	329			125.7	140.2	140.2	154.7	154.7	154.7	169.2	169.2	169.2	169.2
EC-4pole 30, 200 W	214			AB 20	370	141.3	155.8	155.8	170.3	170.3	170.3	184.8	184.8	184.8	184.8
EC-4pole 30, 200 W	214	HEDL 5540	329	AB 20	370	162.1	176.6	176.6	191.1	191.1	191.1	205.6	205.6	205.6	205.6
EC-i 40, 50 W	228					67.1	81.6	81.6	96.1	96.1	96.1	110.6	110.6	110.6	110.6
EC-i 40, 50 W	228	16 EASY				78.8	93.3	93.3	107.8	107.8	107.8	122.3	122.3	122.3	122.3
EC-i 40, 50 W	228	HEDL 5540				90.1	104.6	104.6	119.1	119.1	119.1	133.6	133.6	133.6	133.6
EC-i 40, 70 W	229					77.1	91.6	91.6	106.1	106.1	106.1	120.6	120.6	120.6	120.6
EC-i 40, 70 W	229	16 EASY				88.8	103.3	103.3	117.8	117.8	117.8	132.3	132.3	132.3	132.3
EC-i 40, 70 W	229	HEDL 5540				100.1	114.6	114.6	129.1	129.1	129.1	143.6	143.6	143.6	143.6

Planetary Gearhead GP 42 C ∅42 mm, 3–15 Nm

Ceramic Version

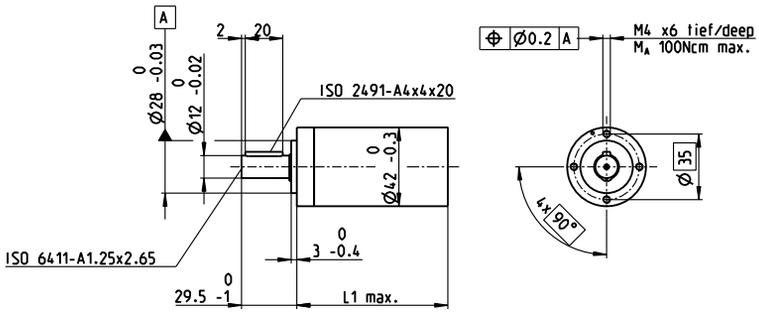

M 1:4

Technical Data

Planetary Gearhead				straight teeth
Output shaft				stainless steel
Bearing at output				preloaded ball bearings
Radial play, 12 mm from flange				max. 0.06 mm
Axial play at axial load	< 5 N			0 mm
	> 5 N			max. 0.3 mm
Max. permissible axial load				150 N
Max. permissible force for press fits				300 N
Sense of rotation, drive to output				=
Recommended input speed				< 8000 rpm
Recommended temperature range				-40…+100°C
Number of stages	1	2	3	4
Max. radial load, 12 mm from flange	120 N	240 N	360 N	360 N

Stock program
Standard program
Special program (on request)

		Part Numbers									
		203113	203115	203119	203120	203124	203129	203128	203133	203137	203141
Gearhead Data											
1 Reduction		3.5:1	12:1	26:1	43:1	81:1	156:1	150:1	285:1	441:1	756:1
2 Reduction absolute		7/2	49/4	26	343/8	2197/27	156	2401/16	15379/54	441	756
10 Mass inertia	gcm²	14	15	9.1	15	9.4	9.1	15	15	14	14
3 Max. motor shaft diameter	mm	10	10	8	10	8	8	10	10	10	10
Part Numbers		203114	203116	260552*	203121	203125	260553*	203130	203134	203138	203142
1 Reduction		4.3:1	15:1	36:1	53:1	91:1	216:1	186:1	319:1	488:1	936:1
2 Reduction absolute		13/3	91/6	36/1	637/12	91	216/1	4459/24	637/2	4394/9	936
10 Mass inertia	gcm²	9.1	15	5.0	15	15	5.0	15	15	9.4	9.1
3 Max. motor shaft diameter	mm	8	10	4	10	10	4	10	10	8	8
Part Numbers		260551*	203117		203122	203126		203131	203135	203139	260554*
1 Reduction		6:1	19:1		66:1	113:1		230:1	353:1	546:1	1296:1
2 Reduction absolute		6/1	169/9		1183/18	338/3		8281/36	28561/81	546	1296/1
10 Mass inertia	gcm²	4.9	9.4		15	9.4		15	9.4	14	5.0
3 Max. motor shaft diameter	mm	4	8		10	8		10	8	10	4
Part Numbers			203118		203123	203127		203132	203136	203140	
1 Reduction			21:1		74:1	126:1		257:1	394:1	676:1	
2 Reduction absolute			21		147/2	126		1029/4	1183/3	676	
10 Mass inertia	gcm²		14		15	14		15	15	9.1	
3 Max. motor shaft diameter	mm		10		10	10		10	10	8	
4 Number of stages		1	2	2	3	3	3	4	4	4	4
5 Max. continuous torque	Nm	3.0	7.5	7.5	15.0	15.0	15.0	15.0	15.0	15.0	15.0
6 Intermittently permissible torque at gear output	Nm	4.5	11.3	11.3	22.5	22.5	22.5	22.5	22.5	22.5	22.5
7 Max. efficiency	%	90	81	81	72	72	72	64	64	64	64
8 Weight	g	260	360	360	460	460	460	560	560	560	560
9 Average backlash no load	°	0.6	0.8	0.8	1.0	1.0	1.0	1.0	1.0	1.0	1.0
11 Gearhead length L1**	mm	41.0	55.5	55.5	70.0	70.0	70.0	84.5	84.5	84.5	84.5

**for EC 45 flat L1 is–3.5 mm

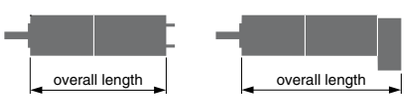

maxon Modular System

+ Motor	Page	+ Sensor	Page	Brake	Page	Overall length [mm] = Motor length + gearhead length + (sensor/brake) + assembly parts									
EC 45 flat, 30 W	231					53.9	68.4	68.4	82.9	82.9	82.9	97.4	97.4	97.4	97.4
EC 45 flat, 50 W	232					58.8	73.3	73.3	87.8	87.8	87.8	102.3	102.3	102.3	102.3
EC 45 flat, 70 W	233					64.2	78.7	78.7	93.2	93.2	93.2	107.7	107.7	107.7	107.7
EC 45 flat, IE, IP 00	234					72.7	87.2	87.2	101.7	101.7	101.7	116.2	116.2	116.2	116.2
EC 45 flat, IE, IP 40	234					74.9	89.4	89.4	103.9	103.9	103.9	118.4	118.4	118.4	118.4
EC 45 flat, IE, IP 00	235					77.7	92.2	92.2	106.7	106.7	106.7	121.2	121.2	121.2	121.2
EC 45 flat, IE, IP 40	235					79.9	94.4	94.4	108.9	108.9	108.9	123.4	123.4	123.4	123.4
MCD EPOS, 60 W	367					161.1	175.6	175.6	190.1	190.1	190.1	204.6	204.6	204.6	204.6
MCD EPOS P, 60 W	367					161.1	175.6	175.6	190.1	190.1	190.1	204.6	204.6	204.6	204.6

Spur Gearhead GS 45 A ∅45 mm, 0.5–2.0 Nm

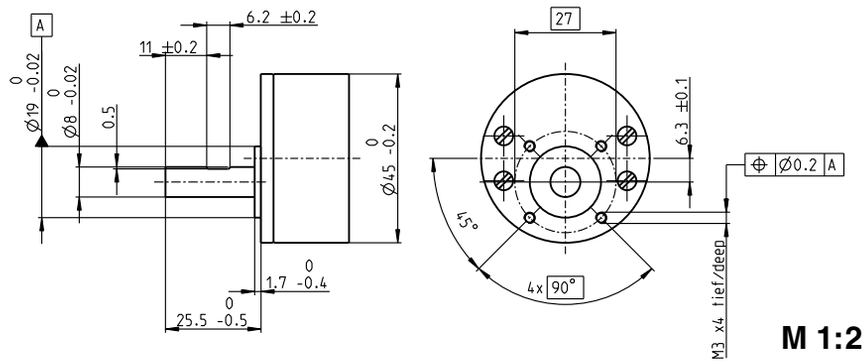

M 1:2

Technical Data

Spur Gearhead	straight teeth
Output shaft	stainless steel, hardened
Bearing at output	ball bearing
Radial play, 10 mm from flange	max. 0.15 mm
Axial play	0.02–0.2 mm
Max. permissible axial load	60 N
Max. permissible force for press fits	60 N
Recommended input speed	< 6000 rpm
Recommended temperature range	-15…+80°C
Number of stages	2 3 4 5 6
Max. radial load, 10 mm from flange	120 N 180 N 190 N 190 N 190 N

Stock program
Standard program
Special program (on request)

			Part Numbers				
			301177	301175	301181	301186	301191
Gearhead Data							
1	Reduction		5:1	18:1	61:1	212:1	732:1
2	Reduction absolute		51/10	459/26	20655/338	125862/595	492790/673
10	Mass inertia	gcm²	3.7	1.6	1.0	0.8	0.8
3	Max. motor shaft diameter	mm	3	3	3	3	3
	Part Numbers		301178	301173	301182	301187	301192
1	Reduction		7:1	26:1	89:1	310:1	1072:1
2	Reduction absolute		209/28	9405/364	66632/745	183281/592	307572/287
10	Mass inertia	gcm²	3.1	1.4	1.0	0.8	0.8
3	Max. motor shaft diameter	mm	3	3	3	3	3
	Part Numbers		301179	266595	301184	301188	301193
1	Reduction		9:1	32:1	111:1	385:1	1334:1
2	Reduction absolute		2295/247	8523/265	334/3	173808/451	198769/149
10	Mass inertia	gcm²	2.1	1.4	0.6	0.5	0.4
3	Max. motor shaft diameter	mm	3	3	3	3	3
	Part Numbers		301180	301171	301185	301189	301194
1	Reduction		14:1	47:1	163:1	564:1	1952:1
2	Reduction absolute		2475/182	6221/132	141157/861	161880/287	1929023/988
10	Mass inertia	gcm²	2.2	0.9	0.5	0.5	0.4
3	Max. motor shaft diameter	mm	3	3	3	3	3
4	Number of stages		2	3	4	5	6
5	Max. continuous torque	Nm	0.5	2.0	2.0	2.0	2.0
6	Intermittently permissible torque at gear output	Nm	0.75	2.5	2.5	2.5	2.5
12	Sense of rotation, drive to output		=	≠	=	≠	=
7	Max. efficiency	%	87	76	66	59	53
8	Weight	g	224	224	255	287	313
9	Average backlash no load	°	1.6	2.0	2.4	2.8	3.2
11	Gearhead length L1*	mm	23.5	23.5	26.9	30.4	33.8

*for EC 45 flat, IE, L1 is max. + 4.0 mm

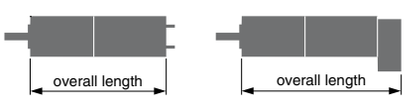

maxon Modular System

+ Motor	Page	+ Sensor	Page	Brake	Page	Overall length [mm] = Motor length + gearhead length + (sensor/brake) + assembly parts			
EC 45 flat, 30 W	231			40.0		40.0	43.4	46.9	50.3
EC 45 flat, 50 W	232			44.9		44.9	48.3	51.8	55.2
EC 45 flat, 70 W	233			50.3		50.3	53.7	57.2	60.6
EC 45 flat, IE, IP 00	234			59.2		59.2	62.6	66.1	69.5
EC 45 flat, IE, IP 40	234			61.4		61.4	64.8	68.3	71.7
EC 45 flat, IE, IP 00	235			64.2		64.2	67.6	71.1	74.5
EC 45 flat, IE, IP 40	235			66.4		66.4	69.8	73.3	76.7

Planetary Gearhead GP 52 C ∅52 mm, 4–30 Nm

Ceramic Version

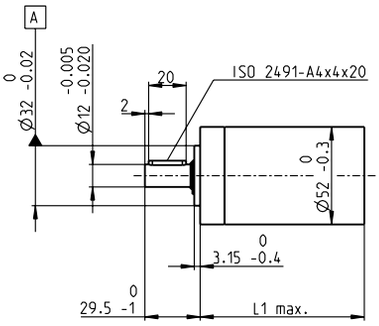

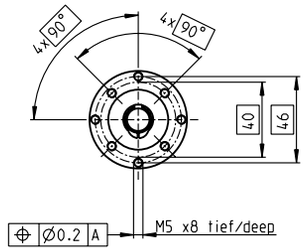

M 1:4

Technical Data

Planetary Gearhead	straight teeth
Output shaft	stainless steel
Bearing at output	preloaded ball bearings
Radial play, 12 mm from flange	max. 0.06 mm
Axial play at axial load	< 5 N: 0 mm
	> 5 N: max. 0.3 mm
Max. permissible axial load	200 N
Max. permissible force for press fits	500 N
Sense of rotation, drive to output	=
Recommended input speed	< 6000 rpm
Recommended temperature range	-15…+80°C
Extended range as option	-40…+100°C
Number of stages	1 2 3 4
Max. radial load, 12 mm from flange	420 N 630 N 900 N 900 N

maxon gear

Stock program
Standard program
Special program (on request)

			Part Numbers						
			223080	223083	223089	223094	223097	223104	223109
Gearhead Data									
1	Reduction		3.5:1	12:1	43:1	91:1	150:1	319:1	546:1
2	Reduction absolute		7/2	49/4	343/8	91	2401/16	637/2	546
10	Mass inertia	gcm²	20.7	17.6	17.3	16.7	17.3	16.8	16.4
3	Max. motor shaft diameter	mm	10	10	10	10	10	10	10
	Part Numbers		223081	223084	223090	223095	223099	223105	223110
1	Reduction		4.3:1	15:1	53:1	113:1	186:1	353:1	676:1
2	Reduction absolute		13/3	91/6	637/12	338/3	4459/24	28561/81	676
10	Mass inertia	gcm²	12	16.8	17.2	9.3	17.3	9.4	9.1
3	Max. motor shaft diameter	mm	8	10	10	8	10	8	8
	Part Numbers			223085	223091	223096	223101	223106	223111
1	Reduction			19:1	66:1	126:1	230:1	394:1	756:1
2	Reduction absolute			169/9	1183/18	126	8281/36	1183/3	756
10	Mass inertia	gcm²		9.5	16.7	16.4	16.8	16.7	16.4
3	Max. motor shaft diameter	mm		8	10	10	10	10	10
	Part Numbers			223086	223092	223098	223102	223107	223112
1	Reduction			21:1	74:1	156:1	257:1	441:1	936:1
2	Reduction absolute			21	147/2	156	1029/4	441	936
10	Mass inertia	gcm²		16.5	17.2	9.1	17.3	16.5	9.1
3	Max. motor shaft diameter	mm		10	10	8	10	10	8
	Part Numbers			223087	223093		223103	223108	
1	Reduction			26:1	81:1		285:1	488:1	
2	Reduction absolute			26	2197/27		15379/54	4394/9	
10	Mass inertia	gcm²		9.1	9.4		16.7	9.4	
3	Max. motor shaft diameter	mm		8	8		10	8	
4	Number of stages		1	2	3	3	4	4	4
5	Max. continuous torque	Nm	4	15	30	30	30	30	30
6	Intermittently permissible torque at gear output	Nm	6	22.5	45	45	45	45	45
7	Max. efficiency	%	91	83	75	75	68	68	68
8	Weight	g	460	620	770	770	920	920	920
9	Average backlash no load	°	0.6	0.8	1.0	1.0	1.0	1.0	1.0
11	Gearhead length L1	mm	49.0	65.0	78.5	78.5	92.0	92.0	92.0

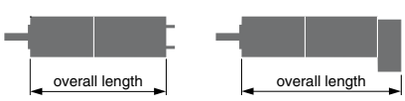

maxon Modular System

+ Motor	Page	+ Sensor	Page	Brake	Page	Overall length [mm] = Motor length + gearhead length + (sensor/brake) + assembly parts						
RE 40, 150 W	114					120.1	136.1	149.6	149.6	163.1	163.1	163.1
RE 40, 150 W	114	MR	320			131.5	147.5	161.0	161.0	174.5	174.5	174.5
RE 40, 150 W	114	HED_ 5540	325/327			140.8	156.8	170.3	170.3	183.8	183.8	183.8
RE 40, 150 W	114	HEDL 9140	331			174.1	190.1	203.6	203.6	217.1	217.1	217.1
RE 40, 150 W	114			AB 28	372	156.2	172.2	185.7	185.7	199.2	199.2	199.2
RE 40, 150 W	114			AB 28	373	164.2	180.2	193.7	193.7	207.2	207.2	207.2
RE 40, 150 W	114	HED_ 5540	325/327	AB 28	372	173.4	189.4	202.9	202.9	216.4	216.4	216.4
RE 40, 150 W	114	HEDL 9140	331	AB 28	373	184.6	200.6	214.1	214.1	227.6	227.6	227.6
RE 50, 200 W	115					157.1	173.1	186.6	186.6	200.1	200.1	200.1
RE 50, 200 W	115	HED_5540	326/328			177.8	193.8	207.3	207.3	220.8	220.8	220.8
RE 50, 200 W	115	HEDL 9140	332			219.5	235.5	249.0	249.0	262.5	262.5	262.5
RE 50, 200 W	115			AB 44	376	219.5	235.5	249.0	249.0	262.5	262.5	262.5
RE 50, 200 W	115	HEDL 9140	332	AB 44	376	232.5	248.5	262.0	262.0	275.5	275.5	275.5
EC 40, 170 W	193					129.1	145.1	158.6	158.6	172.1	172.1	172.1
EC 40, 170 W	193	HED_5540	326/328			152.5	168.5	182.0	182.0	195.5	195.5	195.5
EC 40, 170 W	193	Res 26	337			156.3	172.3	185.8	185.8	199.3	199.3	199.3
EC 40, 170 W	193			AB 32	374	171.8	187.8	201.3	201.3	214.8	214.8	214.8
EC 40, 170 W	193	HED_5540	326/328	AB 32	374	190.2	206.2	219.7	219.7	233.2	233.2	233.2

Planetary Gearhead GP 52 C ∅52 mm, 4–30 Nm

Ceramic Version

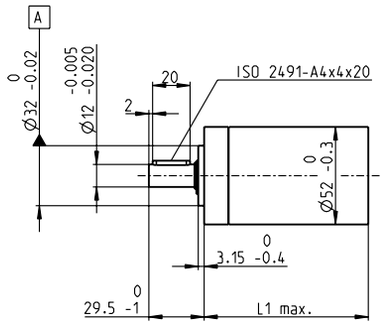

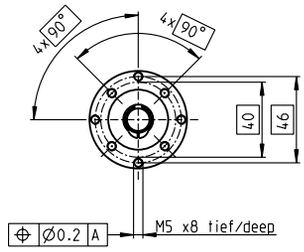

M 1:4

Technical Data

Planetary Gearhead				straight teeth
Output shaft				stainless steel
Bearing at output				preloaded ball bearings
Radial play, 12 mm from flange				max. 0.06 mm
Axial play at axial load	< 5 N			0 mm
	> 5 N			max. 0.3 mm
Max. permissible axial load				200 N
Max. permissible force for press fits				500 N
Sense of rotation, drive to output				=
Recommended input speed				< 6000 rpm
Recommended temperature range				-15…+80°C
Extended range as option				-40…+100°C
Number of stages	1	2	3	4
Max. radial load, 12 mm from flange	420 N	630 N	900 N	900 N

Stock program
Standard program
Special program (on request)

			Part Numbers						
			223080	223083	223089	223094	223097	223104	223109
Gearhead Data									
1	Reduction		3.5:1	12:1	43:1	91:1	150:1	319:1	546:1
2	Reduction absolute		7/2	49/4	343/8	91	2401/16	637/2	546
10	Mass inertia	gcm²	20.7	17.6	17.3	16.7	17.3	16.8	16.4
3	Max. motor shaft diameter	mm	10	10	10	10	10	10	10
	Part Numbers		**223081**	223084	223090	223095	223099	**223105**	223110
1	Reduction		4.3:1	15:1	53:1	113:1	186:1	353:1	676:1
2	Reduction absolute		13/3	91/6	637/12	338/3	4459/24	28561/81	676
10	Mass inertia	gcm²	12	16.8	17.2	9.3	17.3	9.4	9.1
3	Max. motor shaft diameter	mm	8	10	10	8	10	8	8
	Part Numbers			**223085**	223091	223096	223101	223106	223111
1	Reduction			19:1	66:1	126:1	230:1	394:1	756:1
2	Reduction absolute			169/9	1183/18	126	8281/36	1183/3	756
10	Mass inertia	gcm²		9.5	16.7	16.4	16.8	16.7	16.4
3	Max. motor shaft diameter	mm		8	10	10	10	10	10
	Part Numbers			223086	223092	223098	223102	223107	223112
1	Reduction			21:1	74:1	156:1	257:1	441:1	936:1
2	Reduction absolute			21	147/2	156	1029/4	441	936
10	Mass inertia	gcm²		16.5	17.2	9.1	17.3	16.5	9.1
3	Max. motor shaft diameter	mm		10	10	8	10	10	8
	Part Numbers			223087	**223093**		223103	223108	
1	Reduction			26:1	81:1		285:1	488:1	
2	Reduction absolute			26	2197/27		15379/54	4394/9	
10	Mass inertia	gcm²		9.1	9.4		16.7	9.4	
3	Max. motor shaft diameter	mm		8	8		10	8	
4	Number of stages		1	2	3	3	4	4	4
5	Max. continuous torque	Nm	4	15	30	30	30	30	30
6	Intermittently permissible torque at gear output	Nm	6	22.5	45	45	45	45	45
7	Max. efficiency	%	91	83	75	75	68	68	68
8	Weight	g	460	620	770	770	920	920	920
9	Average backlash no load	°	0.6	0.8	1.0	1.0	1.0	1.0	1.0
11	Gearhead length L1	mm	49.0	65.0	78.5	78.5	92.0	92.0	92.0

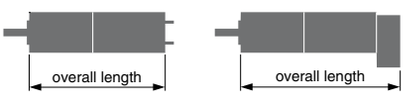

maxon Modular System

+ Motor	Page	+ Sensor	Page	Brake	Page	Overall length [mm] = Motor length + gearhead length + (sensor/brake) + assembly parts						
EC 45, 150 W	194					160.3	176.3	189.8	189.8	203.3	203.3	203.3
EC 45, 150 W	194	HEDL 9140	331			175.9	191.9	205.4	205.4	218.9	218.9	218.9
EC 45, 150 W	194	Res 26	337			160.3	176.3	189.8	189.8	203.3	203.3	203.3
EC 45, 150 W	194			AB 28	373	167.7	183.7	197.2	197.2	210.7	210.7	210.7
EC 45, 150 W	194	HEDL 9140	331	AB 28	373	184.7	200.7	214.2	214.2	227.7	227.7	227.7
EC 45, 250 W	195					193.1	209.1	222.6	222.6	236.1	236.1	236.1
EC 45, 250 W	195	HEDL 9140	331			208.7	224.7	238.2	238.2	251.7	251.7	251.7
EC 45, 250 W	195	Res 26	337			193.1	209.1	222.6	222.6	236.1	236.1	236.1
EC 45, 250 W	195			AB 28	373	200.5	216.5	230.0	230.0	243.5	243.5	243.5
EC 45, 250 W	195	HEDL 9140	331	AB 28	373	217.5	233.5	247.0	247.0	260.5	260.5	260.5
EC-max 40, 120 W	207					137.1	153.1	166.6	166.6	180.1	180.1	180.1
EC-max 40, 120 W	207	MR	320			153.0	169.0	182.5	182.5	196.0	196.0	196.0
EC-max 40, 120 W	207	HEDL 5540	331			160.5	176.5	190.0	190.0	203.5	203.5	203.5
EC-max 40, 120 W	207			AB 28	371	171.5	187.5	201.0	201.0	214.5	214.5	214.5
EC-max 40, 120 W	207	HEDL 5540	331	AB 28	371	189.8	205.8	219.3	219.3	232.8	232.8	232.8
EC 60 flat, IP 00	236					89.8	105.8	119.3	119.3	132.8	132.8	132.8
EC 60 flat, IP 54	236					94.8	110.8	124.3	124.3	137.8	137.8	137.8
EC 60 flat, IP 00	236	MILE				90.8	106.8	120.3	120.3	133.8	133.8	133.8
EC 60 flat, IP 54	236	MILE				94.8	110.8	124.3	124.3	137.8	137.8	137.8
EC 90 flat, 90 W	237					81.0	97.0	110.5	110.5	124.0	124.0	124.0

Planetary Gearhead GP 62 A ∅62 mm, 8–50 Nm

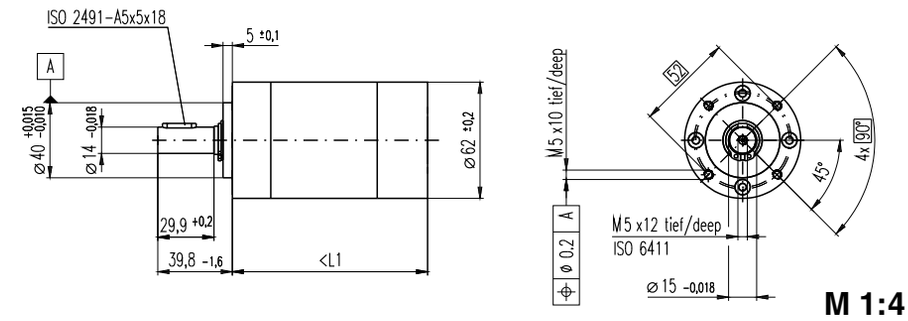

Technical Data

Planetary Gearhead			straight teeth
Output shaft			steel
Bearing at output			ball bearing
Radial play, 7 mm from flange			max. 0.08 mm
Axial play			max. 1 mm
Max. permissible axial load			120 N
Max. permissible force for press fits			1000 N
Sense of rotation, drive to output			=
Recommended input speed			< 3000 rpm
Recommended temperature range			-30…+140°C
Number of stages	1	2	3
Max. radial load, 24 mm from flange	240 N	360 N	570 N

Stock program
Standard program
Special program (on request)

Part Numbers

			110499	110501	110502	110503	110504	110505	110506	110507	110508
Gearhead Data											
1	Reduction		5.2:1	19:1	27:1	35:1	71:1	100:1	139:1	181:1	236:1
2	Reduction absolute		57/11	3591/187	3249/121	1539/44	226223/3179	204687/2057	185193/1331	87723/484	41553/176
3	Max. motor shaft diameter	mm	8	8	8	8	8	8	8	8	8
4	Number of stages		1	2	2	2	3	3	3	3	3
5	Max. continuous torque	Nm	8	25	25	25	50	50	50	50	50
6	Intermittently permissible torque at gear output	Nm	12	37	37	37	75	75	75	75	75
7	Max. efficiency	%	80	75	75	75	70	70	70	70	70
8	Weight	g	950	1250	1250	1250	1540	1540	1540	1540	1540
9	Average backlash no load	°	1.0	1.5	1.5	1.5	2.0	2.0	2.0	2.0	2.0
10	Mass inertia	gcm^2	109	100	105	89	104	105	102	88	89
11	Gearhead length L1	mm	72.5	88.3	88.3	88.3	104.2	104.2	104.2	104.2	104.2

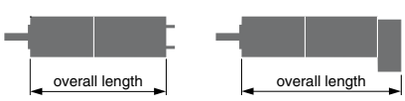

maxon Modular System

+ Motor	Page	+ Sensor	Page	Brake	Page	Overall length [mm] = Motor length + gearhead length + (sensor/brake) + assembly parts								
RE 50, 200 W	115					180.6	196.4	196.4	196.4	212.3	212.3	212.3	212.3	212.3
RE 50, 200 W	115	HEDS 5540	326			201.3	217.1	217.1	217.1	233.0	233.0	233.0	233.0	233.0
RE 50, 200 W	115	HEDL 5540	328			201.3	217.1	217.1	217.1	233.0	233.0	233.0	233.0	233.0
RE 50, 200 W	115	HEDL 9140	332			243.0	258.8	258.8	258.8	2747	274.7	274.7	274.7	278.7
RE 50, 200 W	115			AB 44	376	243.0	258.8	258.8	258.8	2747	274.7	274.7	274.7	278.7
RE 50, 200 W	115	HEDL 9140	332	AB 44	376	256.0	271.8	271.8	271.8	287.7	287.7	287.7	287.7	287.7
EC 45, 250 W	195					216.6	232.4	232.4	232.4	248.3	248.3	248.3	248.3	248.3
EC 45, 250 W	195	HEDL 9140	331			232.2	248.0	248.0	248.0	263.9	263.9	263.9	263.9	263.9
EC 45, 250 W	195	Res 26	337			216.6	232.4	232.4	232.4	248.3	248.3	248.3	248.3	248.3
EC 45, 250 W	195			AB 28	373	224.0	239.8	239.8	239.8	255.7	255.7	255.7	255.7	255.7
EC 45, 250 W	195	HEDL 9140	331	AB 28	373	241.0	256.8	256.8	256.8	272.7	272.7	272.7	272.7	272.7

Planetary Gearhead GP 81 A ∅81 mm, 20–120 Nm

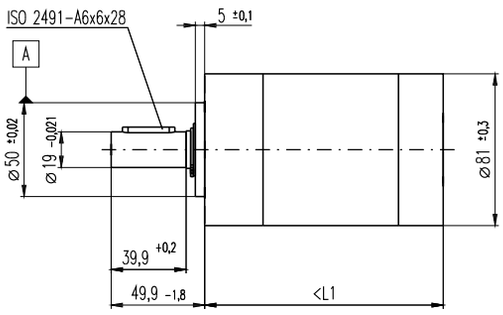

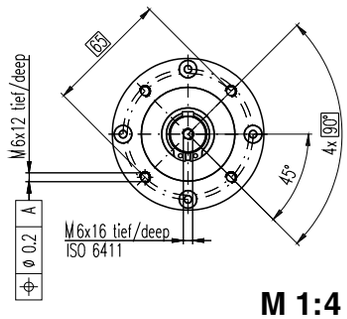

M 1:4

Technical Data

Planetary Gearhead			straight teeth
Output shaft			steel
Bearing at output			ball bearing
Radial play, 8 mm from flange			max. 0.1 mm
Axial play			max. 1 mm
Max. permissible force for press fits			1500 N
Sense of rotation, drive to output			=
Recommended input speed			< 3000 rpm
Recommended temperature range			-30…+140°C
Number of stages	1	2	3
Max. radial load, 24 mm from flange	400 N	600 N	1000 N
Max. permissible axial load	80 N	120 N	200 N

Stock program
Standard program
Special program (on request)

Part Numbers

			110408	110409	110410	110411	110412	110413
Gearhead Data								
1	Reduction		3.7:1	14:1	25:1	51:1	93:1	308:1
2	Reduction absolute		63/17	3969/289	1701/68	250047/4913	107163/1156	19683/64
3	Max. motor shaft diameter	mm	14	14	14	14	14	14
4	Number of stages		1	2	2	3	3	3
5	Max. continuous torque	Nm	20	60	60	120	120	120
6	Intermittently permissible torque at gear output	Nm	30	90	90	180	180	180
7	Max. efficiency	%	80	75	75	70	70	70
8	Weight	g	2300	3000	3000	3700	3700	3700
9	Average backlash no load	°	1.0	1.5	1.5	2.0	2.0	2.0
10	Mass inertia	gcm^2	165	155	125	88	154	89
11	Gearhead length L1	mm	92.0	113.7	113.7	135.3	135.3	135.3

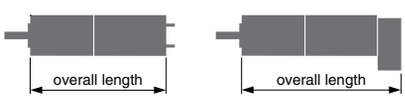

maxon Modular System

+ Motor	Page	+ Sensor	Page	Brake	Page	Overall length [mm] = Motor length + gearhead length + (sensor/brake) + assembly parts					
RE 65, 250 W	116					223.5	245.2	245.2	266.8	266.8	266.8
RE 65, 250 W	116	HEDS 5540	326			249.4	271.1	271.1	292.7	292.7	292.7
RE 65, 250 W	116	HEDL 5540	328			249.4	271.1	271.1	292.7	292.7	292.7
RE 65, 250 W	116	HEDL 9140	332			279.6	301.3	301.3	322.9	322.9	322.9
RE 65, 250 W	116			AB 44	376	279.6	301.3	301.3	322.9	322.9	322.9
RE 65, 250 W	116	HEDL 9140	332	AB 44	376	297.6	319.3	319.3	340.9	340.9	340.9
EC 60, 400 W	196					269.4	291.1	291.1	312.7	312.7	312.7
EC 60, 400 W	196	HEDL 9140	331			269.4	291.1	291.1	312.7	312.7	312.7
EC 60, 400 W	196	Res 26	337			269.4	291.1	291.1	312.7	312.7	312.7
EC 60, 400 W	196			AB 41	375	283.0	304.7	304.7	326.3	326.3	326.3
EC 60, 400 W	196	HEDL 9140	331	AB 41	375	307.0	328.7	328.7	350.3	350.3	350.3

maxon spindle drive

maxon spindle drive

Compact, easy to configure spindle drives as complete systems. With integrated axial bearing for high axial loads. Versions with ceramic components, metric spindle, ball screw and trapezoidal spindle.

Important considerations	292
Spindle Drives	293–303
Options	304–306

Spindle Drive Basics

Design

❶ Spindle, directly implemented in the gearhead
❷ Radial bearing
❸ Axial bearing
❹ Planetary gearhead 0–4 stages
❺ Motor
❻ Encoder

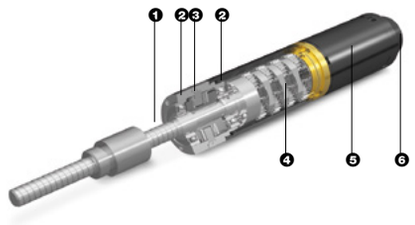

The particular type of spindle required must first be established before a spindle drive can be designed. Every type of spindle has different characteristics and a number of specific limits. These limits are taken into account in the technical data.

Ball screw:
– highly efficient
– not self-locking
– high load capacity
Metric spindle:
– self-locking
– low costs
Trapezoidal spindle:
– same as metric spindle
– higher load capacity than metric spindle

Feed force

For the calculation of the feed force acceleration and friction forces as well as gravity have to be taken into consideration. Exceeding the maximum permissible load must be avoided, as this damages the spindle. The maximum permissible feed force is displayed for standard spindles. For longer spindles, the permissible feed force can be limited by the critical compressive force of the spindle. In this case, supporting the end of the spindle may be necessary.

Limitation for ball screws

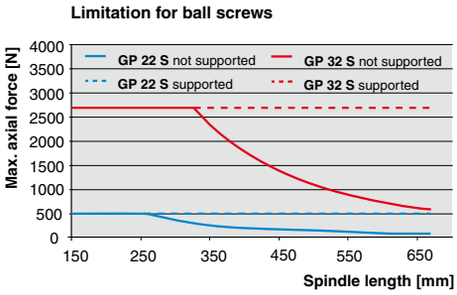

Torque

The required torque of the spindle M_a [mNm] is calculated with the feed force F_a [N] (load), the thread lead p [mm] and the efficiency of the spindle η_1.

$$M_a = \frac{F_a \cdot p}{2 \cdot \pi \cdot \eta_1}$$

In combination with the gearhead, the required motor torque M_{mot} [mNm] is:

$$M_{mot} = \frac{F_a \cdot p}{2 \cdot \pi \cdot i \cdot \eta}$$

Where i is the gearhead reduction ratio and η the efficiency of the complete spindle drive.

Technical Data

The "Technical Data" block contains generally applicable data on spindle, nut and gearhead. These are independent of the gearhead reduction ratio.

Length

The data sheets show the spindle drives with the standard lengths. Other lengths are available as an option in 5 mm steps up to a given maximum length. Please give detailed requirements for special lengths.

Max. efficiency/mass inertia

The values stated refer to the spindle alone (without gearhead). The values with gearhead are given in the "Gearhead data" main data field.

Nut

Standard spindle drives are supplied with a thread nut. Flange or cylinder nuts are also available as an option. See details with corresponding reference number on page 304.

Bearing

The output stage and the spindle are supported by preloaded axial bearings. This means that the high axial forces can be absorbed directly by the gearhead without additional support.

Speed and feed velocity

Feed velocity v [mm/s] is linked to output speed n [rpm] by the lead p [mm].

$$v = \frac{p \cdot n}{60}$$

In combination with the gearhead, the motor speed n_{mot} [rpm] is:

$$n_{mot} = \frac{v \cdot 60 \cdot i}{p}$$

Where i is the gearhead reduction ratio and p the spindle lead.

The spindle speed is limited by the resonance frequency of the spindle and for ball screws additionally by the ball return system.

In addition, the maximum permissible speed of the gearhead has to be considered.

Max. spindle speed at ball screws

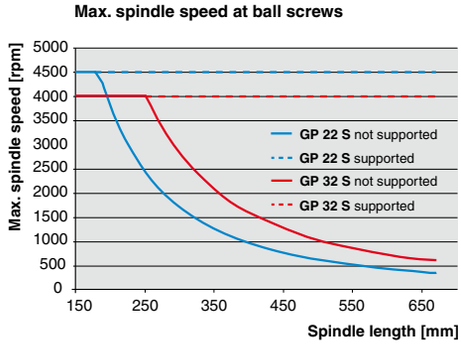

Spindle Drive Data

Line 7 Max. efficiency
The given efficiency is a maximum value that applies when loaded with maximum feed force. Efficiency falls sharply with very small loads. The stated value refers to the complete spindle drive (gearhead and spindle).

Line 20 Max. feed velocity
Specifies the maximum permissible feed velocity.

Line 21 Max. feed force (continuous)
Is the maximum permissible feed force which may be continuously applied. Exceeding this value results in a reduced service life.

Line 22 Max. feed force (intermittent)
Is the maximum permissible feed force which may be intermittently applied. "Intermittently" is defined as follows:
– during max. 1 second
– during max. 10% of operation
Exceeding these values results in a reduced service life.

Line 23 Mechanical positioning accuracy
In this value, following factors are taken into consideration:
– backlash of the gearhead
– accuracy of the spindle
– axial play of the nut

Maximum stroke

The maximum possible stroke depends on the length of the spindle L [mm]. The length of the nut L_N [mm] and the thickness of its mounting plate X [mm] must be taken into consideration.

Stroke = L – (L_N + X + stroke reserve + opt. SPIN02)

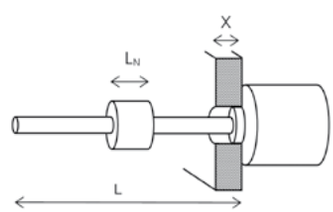

Mounting and safety instructions

Using a ball screw with a flange nut, the mounting through a hole is only possible with the optional rectangular mounting flange.
The ball screw nut may never be removed. As the balls are preloaded remounting would be impossible.
The spindle may never block during operation, as this could damage the spindle nut or gearhead.
Service life crucially depends on the precision with which the gear is fixed to the spindle nut. Eccentricities and angle errors sometimes result in massive radial loading which must never exceed the given maximum value.
Additional information can be found in the maxon online shop at the item under downloads.

Spindle Drive GP 6 S Ø6 mm, Metric spindle

Ceramic Version

NEW

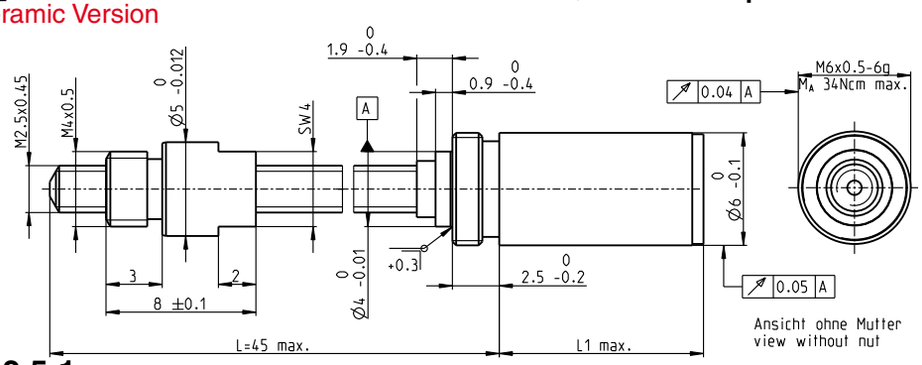

M 2.5:1

Technical Data					
Spindle	M2.5 x 0.45, ceramic				
Standard length	45 mm				
Special length (5 mm steps)	max. 80 mm				
Nut (standard)	thread nut				
Material	stainless steel				
Axial play	< 0.079 mm				
Planetary gearhead	straight teeth				
Bearing	ball bearing				
Radial play, 5 mm from flange	< 0.12 mm				
Axial play	preloaded				
Recommended input speed	< 12000 rpm				
Recommended temperature range	-15…+80°C				
Max. axial load (static)[1]	10 N				
Number of stages	1	2	3	4	5
Max. radial load, 5 mm from flange	5 N	5 N	5 N	5 N	5 N

Stock program
Standard program
Special program (on request)

Part Numbers

			437380	437379	437378	437377	437375
Spindle Drive Data (provisional)							
1	Reduction		3.9 : 1	15 : 1	57 : 1	221 : 1	854 : 1
2	Reduction absolute		27/7	729/49	19683/343	531441/2401	14348907/16807
20	Max. feed velocity[1]	mm/s	25	10	2.6	0.7	0.2
21	Max. feed force (continuous)[1]	N	2	3	5	7	11
22	Max. feed force (intermittent)[1]	N	6	10	15	15	15
4	Number of stages		1	2	3	4	5
7	Max. efficiency gearhead incl. spindle	%	39	34	30	27	23
8	Weight[1]	g	2.9	3.3	3.7	4.1	4.5
9	Average backlash no load	°	1.8	2.0	2.2	2.5	2.8
23	Mechanical positioning accuracy[1]	mm	0.081	0.082	0.082	0.082	0.083
10	Mass inertia gearhead incl. spindle[1]	gcm^2	0.001	0.001	0.001	0.001	0.001
11	Gearhead length L1	mm	6.9	9.4	12.0	14.5	17.1

[1] based on spindle length 44 mm

maxon Modular System

+ Motor	Page	+ Sensor/Brake	Page	Overall length [mm] = Motor length + gearhead length + (sensor / brake) + assembly parts				
RE 6, 0.3 W, A	80			22.6	25.1	27.7	30.2	32.8
RE 6, 0.3 W, B	80			26.6	29.1	31.7	34.2	36.8
EC 6, 1.5 W	170			28.3	30.8	33.4	35.9	38.5
EC 6, 2 W	171			28.3	30.8	33.4	35.9	38.5

Spindle Drive GP 8 S Ø8 mm, Metric spindle

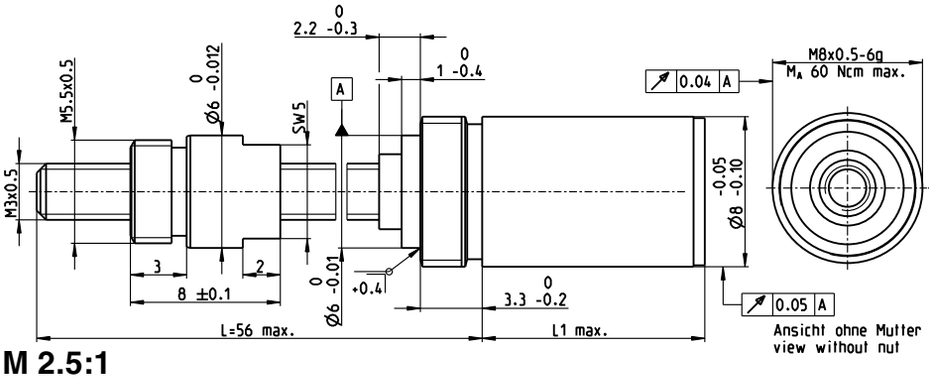

M 2.5:1

Technical Data					
Spindle	M3 x 0.5, stainless steel				
Standard length	56 mm				
Special length (5 mm steps)	max. 100 mm				
Nut (standard)	thread nut				
Material	bronze				
Axial play	< 0.1 mm				
Planetary gearhead	straight teeth				
Bearing	ball bearing				
Radial play, 5 mm from flange	< 0.08 mm				
Axial play	preloaded				
Recommended input speed	< 12000 rpm				
Recommended temperature range	-15…+80°C				
Max. axial load (static)[1]	25 N				
Number of stages	1	2	3	4	5
Max. radial load, 5 mm from flange	5 N	5 N	5 N	5 N	5 N

Stock program
Standard program
Special program (on request)

Part Numbers					
	473643	473644	473645	473646	473647
Spindle Drive Data (provisional)					
1 Reduction	4:1	16:1	64:1	256:1	1024:1
2 Reduction absolute	4/1	16/1	64/1	256/1	1024/1
20 Max. feed velocity[1] mm/s	15	6.3	1.6	0.4	0.1
21 Max. feed force (continuous)[1] N	3	6	9	14	22
22 Max. feed force (intermittent)[1] N	8	18	27	27	27
4 Number of stages	1	2	3	4	5
7 Max. efficiency gearhead incl. spindle %	27	24	22	19	17
8 Weight[1] g	6.3	6.9	7.5	8.1	8.7
9 Average backlash no load °	1.8	2.0	2.2	2.5	2.8
23 Mechanical positioning accuracy[1] mm	0.112	0.112	0.112	0.112	0.113
10 Mass inertia gearhead incl. spindle[1] gcm^2	0.005	0.004	0.004	0.004	0.004
11 Gearhead length L1 mm	7.0	9.6	12.2	14.8	17.4

[1] based on spindle length 55 mm

maxon Modular System

+ Motor	Page	**+ Sensor/Brake**	Page	**Overall length [mm]** = Motor length + gearhead length + (sensor / brake) + assembly parts				
RE 8, 0.5 W, A	81			23.7	26.3	28.9	31.5	34.1
RE 8, 0.5 W, B	81			26.7	29.3	31.9	34.5	37.1
RE 8, 0.5 W, A	81	MR	312/313	29.7	32.3	34.9	37.5	40.1
RE 8, 0.5 W, A	81	8 OPT	321	31.9	34.5	37.1	39.7	42.3
EC 8, 2 W	172			30.1	32.7	35.3	37.9	40.5

Spindle Drive GP 8 S Ø8 mm, Metric spindle

Ceramic Version

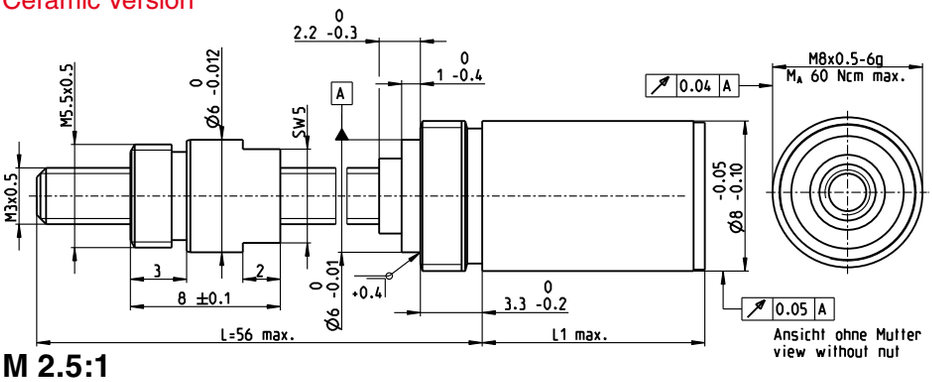

M 2.5:1

Technical Data

Spindle					M3 x 0.5, ceramic
Standard length					56 mm
Special length (5 mm steps)					max. 100 mm
Nut (standard)					thread nut
Material					stainless steel
Axial play					< 0.09 mm
Planetary gearhead					straight teeth
Bearing					ball bearing
Radial play, 5 mm from flange					< 0.08 mm
Axial play					preloaded
Recommended input speed					< 12000 rpm
Recommended temperature range					-15…+80°C
Max. axial load (static)[1]					25 N
Number of stages	1	2	3	4	5
Max. radial load, 5 mm from flange	5 N	5 N	5 N	5 N	5 N

Stock program
Standard program
Special program (on request)

Part Numbers

Spindle Drive Data (provisional)			473636	473637	473639	473640	473641
1	Reduction		4:1	16:1	64:1	256:1	1024:1
2	Reduction absolute		4/1	16/1	64/1	256/1	1024/1
20	Max. feed velocity[1]	mm/s	25	6.3	1.6	0.4	0.1
21	Max. feed force (continuous)[1]	N	3	7	11	17	27
22	Max. feed force (intermittent)[1]	N	14	22	32	32	32
4	Number of stages		1	2	3	4	5
7	Max. efficiency gearhead incl. spindle	%	38	34	31	28	25
8	Weight[1]	g	6.3	6.9	7.5	8.1	8.7
9	Average backlash no load	°	1.8	2.0	2.2	2.5	2.8
23	Mechanical positioning accuracy[1]	mm	0.087	0.087	0.087	0.087	0.088
10	Mass inertia gearhead incl. spindle[1]	gcm^2	0.005	0.004	0.004	0.004	0.004
11	Gearhead length L1	mm	7.0	9.6	12.2	14.8	17.4

[1] based on spindle length 55 mm

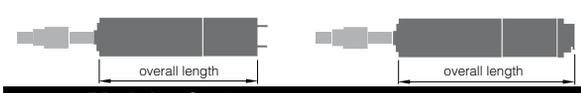

maxon Modular System

+ Motor	Page	**+ Sensor/Brake**	Page	**Overall length [mm]** = Motor length + gearhead length + (sensor / brake) + assembly parts				
RE 8, 0.5 W, A	81			23.7	26.3	28.9	31.5	34.1
RE 8, 0.5 W, B	81			26.7	29.3	31.9	34.5	37.1
RE 8, 0.5 W, A	81	MR	312/313	29.7	32.3	34.9	37.5	40.1
RE 8, 0.5 W, A	81	8 OPT	321	31.9	34.5	37.1	39.7	42.3
EC 8, 2 W	172			30.1	32.7	35.3	37.9	40.5

Spindle Drive GP 16 S Ø16 mm, Ball Screw

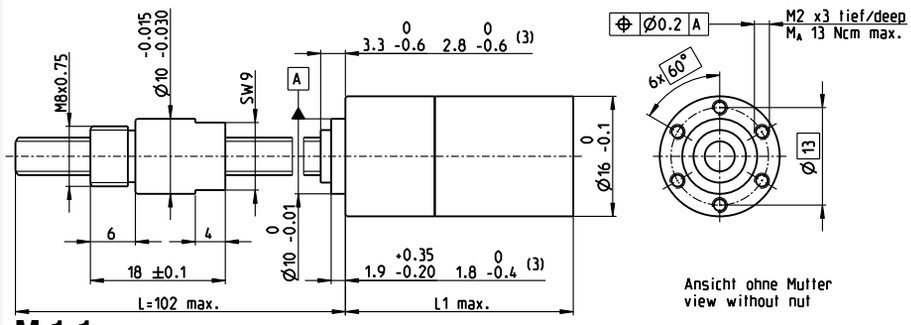

M 1:1

Technical Data					
Spindle					Ø5 x 2, stainless steel
Standard length					102 mm
Special length (5 mm steps)					max. 200 mm
Nut (standard)					thread nut
Material					X46Cr13, hardened
Axial play					< 0.01 mm
Planetary gearhead					straight teeth
Bearing					ball bearing/axial bearing
Radial play, 6 mm from flange					< 0.08 mm
Axial play					preloaded
Recommended input speed[2]					< 12 000 rpm
Recommended temperature range					-15…+80°C
Max. axial load (static)[1]					500 N
Number of stages	0	1	2	3	4
Max. radial load, 6 mm from flange	20 N	40 N	60 N	80 N	80 N

Stock program
Standard program
Special program (on request)

			Part Numbers				
			424221	424222	424223	424219	424224
Spindle Drive Data (provisional)							
1	Reduction		1:1	4.4:1	19:1	84:1	370:1
2	Reduction absolute		1/1	57/13	3249/169	185193/2197	10556001/28561
20	Max. feed velocity[1]	mm/s	150	90.9	21.1	4.8	1.1
21	Max. feed force (continuous)[1]	N	54	64	104	171	280
22	Max. feed force (intermittent)[1]	N	149	176	287	403	403
	Part Numbers			424731	424733	424745	424749
1	Reduction			5.4:1	24:1	104:1	455:1
2	Reduction absolute			27/5	1539/65	87723/845	5000211/10985
20	Max. feed velocity[1]	mm/s		74.1	16.7	3.8	0.9
21	Max. feed force (continuous)[1]	N		69	113	184	300
22	Max. feed force (intermittent)[1]	N		189	311	403	403
	Part Numbers				424744	424747	424750
1	Reduction				29:1	128 :1	561:1
2	Reduction absolute				729/25	41553/325	2368521/4225
20	Max. feed velocity[1]	mm/s			13.8	3.1	0.7
21	Max. feed force (continuous)[1]	N			120	197	322
22	Max. feed force (intermittent)[1]	N			331	403	403
	Part Numbers					424748	424751
1	Reduction					157:1	690:1
2	Reduction absolute					19683/125	1121931/1625
20	Max. feed velocity[1]	mm/s				2.5	0.6
21	Max. feed force (continuous)[1]	N				211	345
22	Max. feed force (intermittent)[1]	N				403	403
	Part Numbers						424752
1	Reduction						850:1
2	Reduction absolute						531441/625
20	Max. feed velocity[1]	mm/s					0.5
21	Max. feed force (continuous)[1]	N					370
22	Max. feed force (intermittent)[1]	N					403
4	Number of stages		0	1	2	3	4
7	Max. efficiency gearhead incl. spindle	%	93	87	79	71	63
8	Weight[1]	g	52	58	61	65	69
9	Average backlash no load	°	1.0	1.4	1.6	2.0	2.4
23	Mechanical positioning accuracy[1]	mm	0.039	0.041	0.042	0.044	0.046
10	Mass inertia gearhead incl. spindle[1]	gcm²	0.23	0.11	0.05	0.05	0.05
11	Gearhead length L1	mm	19.2	22.3	27.4	31.0	34.6

[1] based on spindle length 102 mm (standard length) [2] for reduction 1:1 = 4500 rpm [3] for reduction 1:1

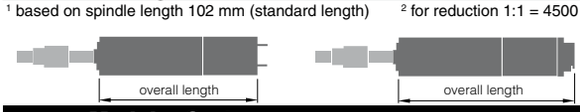

maxon Modular System

+ Motor	Page	+ Sensor/Brake	Page	**Overall length [mm]** = Motor length + gearhead length + (sensor / brake) + assembly parts				
RE 16, 2 W	102			41.6	44.7	49.8	53.4	57.0
RE 16, 2 W	102	MR	315/317	47.3	50.4	55.5	59.1	62.7
RE 16, 3.2 W	103/104			59.7	62.8	67.9	71.5	75.1
RE 16, 3.2 W	104	MR	315/317	64.7	67.8	72.9	76.5	80.1
RE 16, 3.2 W	104	MEnc 13	334	65.8	68.9	74.0	77.6	81.2
RE 16, 4.5 W	105/106			62.7	65.8	70.9	74.5	78.1
RE 16, 4.5 W	106	MR	315/317	67.7	70.8	75.9	79.5	83.1
RE 16, 4.5 W	106	MEnc 13	334	68.9	72.0	77.1	80.7	84.3

Continuation of the modular system (irrespective of the spindle) on page 297 and 298.

Spindle Drive GP 16 S Ø16 mm, Metric spindle

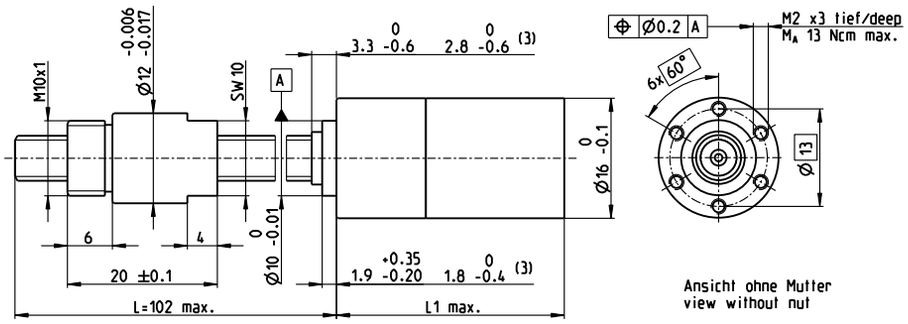

M 1:1

Technical Data

Spindle	M6 x 1, stainless steel
Standard length	102 mm
Special length (5 mm steps)	max. 200 mm
Nut (standard)	thread nut
Material	bronze
Axial play	< 0.134 mm
Planetary gearhead	straight teeth
Bearing	ball bearing/axial bearing
Radial play, 6 mm from flange	< 0.08 mm
Axial play	preloaded
Recommended input speed[2]	< 12000 rpm
Recommended temperature range	-15…+80°C
Max. axial load (static)[1]	500 N

Number of stages	0	1	2	3	4
Max. radial load, 6 mm from flange	20 N	40 N	60 N	80 N	80 N

Stock program
Standard program
Special program (on request)

			Part Numbers				
			424231	424232	424233	424234	424235
Spindle Drive Data (provisional)							
1	Reduction		1:1	4.4:1	19:1	84:1	370:1
2	Reduction absolute		1/1	57/13	3249/169	185193/2197	10556001/28561
20	Max. feed velocity[1]	mm/s	50.0	45.5	10.5	2.4	0.5
21	Max. feed force (continuous)[1]	N	35	37	60	98	160
22	Max. feed force (intermittent)[1]	N	134	138	224	315	315
	Part Numbers			424797	424798	424800	424806
1	Reduction			5.4:1	24:1	104:1	455:1
2	Reduction absolute			27/5	1539/65	87723/845	5000211/10985
20	Max. feed velocity[1]	mm/s		37.0	8.3	1.9	0.4
21	Max. feed force (continuous)[1]	N		39	64	105	172
22	Max. feed force (intermittent)[1]	N		148	243	315	315
	Part Numbers				424799	424803	424807
1	Reduction				29:1	128:1	561:1
2	Reduction absolute				729/25	41553/325	2368521/4225
20	Max. feed velocity[1]	mm/s			6.9	1.6	0.4
21	Max. feed force (continuous)[1]	N			69	112	184
22	Max. feed force (intermittent)[1]	N			258	315	315
	Part Numbers					424804	424808
1	Reduction					157:1	690:1
2	Reduction absolute					19683/125	1121931/1625
20	Max. feed velocity[1]	mm/s				1.3	0.3
21	Max. feed force (continuous)[1]	N				120	197
22	Max. feed force (intermittent)[1]	N				315	315
	Part Numbers						424809
1	Reduction						850:1
2	Reduction absolute						531441/625
20	Max. feed velocity[1]	mm/s					0.2
21	Max. feed force (continuous)[1]	N					211
22	Max. feed force (intermittent)[1]	N					315
4	Number of stages		0	1	2	3	4
7	Max. efficiency gearhead incl. spindle	%	28	27	24	22	19
8	Weight[1]	g	55	61	64	68	72
9	Average backlash no load	°	1.0	1.4	1.6	2.0	2.4
23	Mechanical positioning accuracy[1]	mm	0.166	0.167	0.167	0.169	0.170
10	Mass inertia gearhead incl. spindle[1]	gcm²	0.23	0.11	0.05	0.05	0.05
11	Gearhead length L1	mm	19.2	22.3	27.4	31.0	34.6

[1] based on spindle length 102 mm (standard length) [2] for reduction 1:1 = 3000 rpm [3] for reduction 1:1

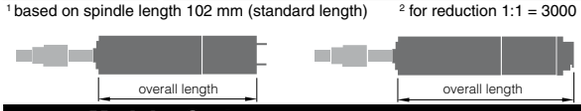

maxon Modular System

+ Motor	Page	+ Sensor/Brake	Page	Overall length [mm] = Motor length + gearhead length + (sensor/brake) + assembly parts				
A-max 16	121–124			44.7	47.8	52.9	56.5	60.1
A-max 16	122/124	MR	315/317	49.7	52.8	57.9	61.5	65.1
A-max 16	122/124	MEnc 13	334	52.8	55.9	61.0	64.6	68.2

Continuation of the modular system (irrespective of the spindle) on pages 296 and 298.

Spindle Drive GP 16 S Ø16 mm, Metric spindle

Ceramic Version

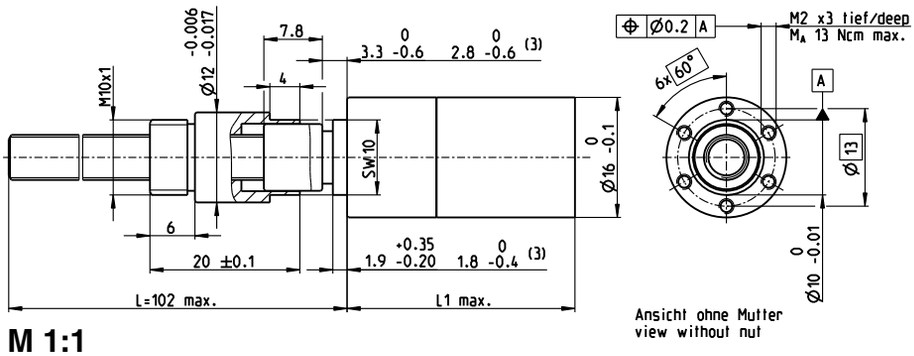

M 1:1

Technical Data					
Spindle					M6 x 1, ceramic
Standard length					102 mm
Special length (5 mm steps)					max. 200 mm
Nut (standard)					thread nut
Material					X8CrNiS18-9
Axial play					< 0.134 mm
Planetary gearhead					straight teeth
Bearing					ball bearing
Radial play, 6 mm from flange					< 0.08 mm
Axial play					preloaded
Recommended input speed[2]					< 12 000 rpm
Recommended temperature range					-15…+80°C
Max. axial load (static)[1]					500 N
Number of stages	0	1	2	3	4
Max. radial load, 6 mm from flange	20 N	40 N	60 N	80 N	80 N

Stock program
Standard program
Special program (on request)

			Part Numbers				
			424241	424242	424243	424244	424245
Spindle Drive Data (provisional)							
1	Reduction		1:1	4.4:1	19:1	84:1	370:1
2	Reduction absolute		1/1	57/13	3249/169	185193/2197	10556001/28561
20	Max. feed velocity[1]	mm/s	50.0	45.5	10.5	2.4	0.5
21	Max. feed force (continuous)[1]	N	44	46	74	122	200
22	Max. feed force (intermittent)[1]	N	134	138	224	315	315
	Part Numbers			424811	424812	424814	424819
1	Reduction			5.4:1	24:1	104:1	455:1
2	Reduction absolute			27/5	1539/65	87723/845	5000211/10985
20	Max. feed velocity[1]	mm/s		37.0	8.3	1.9	0.4
21	Max. feed force (continuous)[1]	N		49	80	131	215
22	Max. feed force (intermittent)[1]	N		148	243	315	315
	Part Numbers				424813	424815	424820
1	Reduction				29:1	128:1	561:1
2	Reduction absolute				729/25	41553/325	2368521/4225
20	Max. feed velocity[1]	mm/s			6.9	1.6	0.4
21	Max. feed force (continuous)[1]	N			86	141	230
22	Max. feed force (intermittent)[1]	N			258	315	315
	Part Numbers					424818	424821
1	Reduction					157:1	690:1
2	Reduction absolute					19683/125	1121931/1625
20	Max. feed velocity[1]	mm/s				1.3	0.3
21	Max. feed force (continuous)[1]	N				150	246
22	Max. feed force (intermittent)[1]	N				315	315
	Part Numbers						424822
1	Reduction						850:1
2	Reduction absolute						531441/625
20	Max. feed velocity[1]	mm/s					0.2
21	Max. feed force (continuous)[1]	N					264
22	Max. feed force (intermittent)[1]	N					315
4	Number of stages		0	1	2	3	4
7	Max. efficiency gearhead incl. spindle	%	41	38	34	31	28
8	Weight[1]	g	55	61	64	68	72
9	Average backlash no load	°	1.0	1.4	1.6	2.0	2.4
23	Mechanical positioning accuracy[1]	mm	0.166	0.167	0.167	0.169	0.170
10	Mass inertia gearhead incl. spindle[1]	gcm²	0.23	0.11	0.05	0.05	0.05
11	Gearhead length L1	mm	19.2	22.3	27.4	31.0	34.6

[1] based on spindle length 102 mm (standard length) [2] for reduction 1:1 = 3000 rpm [3] for reduction 1:1

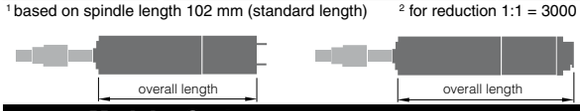

maxon Modular System

+ Motor	Page	+ Sensor/Brake	Page	**Overall length [mm]** = Motor length + gearhead length + (sensor/brake) + assembly parts				
EC 16, 30 W	178			59.3	62.4	67.5	71.1	74.7
EC 16, 30 W	178	MR	318	70.0	73.1	78.2	81.8	85.4
EC 16, 60 W	180			75.3	78.4	83.5	87.1	90.7
EC 16, 60 W	180	MR	318	86.0	89.1	94.2	97.8	101.4
EC-max 16, 5 W	199			43.3	46.4	51.5	55.1	58.7
EC-max 16, 5 W	199	MR	318	50.6	53.7	58.8	62.4	66.0
EC-max 16, 8 W	201			55.3	58.4	63.5	67.1	70.7
EC-max 16, 8 W	201	MR	318	62.6	65.7	70.8	74.4	78.0

Continuation of the modular system (irrespective of the spindle) on pages 296 and 297.

Spindle Drive GP 22 S Ø22 mm, Ball Screw

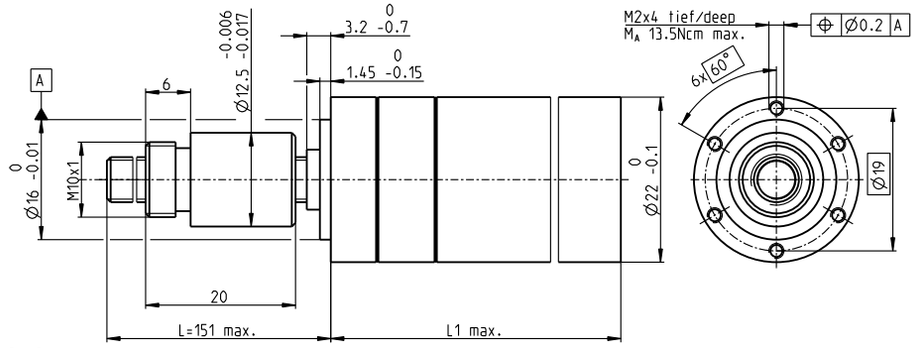

M 1:1

Technical Data				
Spindle	Ø6 x 2, stainless steel			
Standard length	151 mm			
Special length (5 mm steps)	max. 300 mm			
Nut (standard)	thread nut			
Material	100CR6, hardened			
Axial play	< 0.01 mm			
Planetary gearhead	straight teeth			
Bearing	ball bearing/thrust roller bearing			
Radial play, 5 mm from flange	< 0.05 mm			
Axial play	preloaded			
Recommended input speed[4]	< 8000 rpm			
Recommended temperature range	-15…+80°C			
Max. axial load (static)[1]	500 N			
Number of stages	1	2	3	4
Max. radial load, 15 mm from flange	80 N	130 N	180 N	180 N

Stock program
Standard program
Special program (on request)

			Part Numbers							
			363863	363867	363871	363872	363877	363882	363887	363892
Spindle Drive Data										
1	Reduction		1:1	14:1	29:1	53:1	89:1	198:1	333:1	479:1
2	Reduction absolute		1/1	225/16	729/25	3375/64	4617/52	50625/256	69255/208	124659/260
20	Max. feed velocity[1]	mm/s	150	19	9.2	5.0	3.0	1.3	0.8	0.6
21	Max. feed force (continuous)[1]	N	77	154	196	240	285	372	443	500
22	Max. feed force (intermittent)[1]	N	183	365	465	500	500	500	500	500
	Part Numbers		363864	364041		363873	363878	363883	363888	363893
1	Reduction		3.8:1	16:1		62:1	104:1	231:1	370:1	561:1
2	Reduction absolute		15/4	885/52		12825/208	87723/845	192375/832	10556001/28561	2368521/4225
20	Max. feed velocity[1]	mm/s	70	17		4.3	2.6	1.2	0.7	0.5
21	Max. feed force (continuous)[1]	N	100	161		253	300	392	458	500
22	Max. feed force (intermittent)[1]	N	236	381		500	500	500	500	500
	Part Numbers		363865	363868		363874	363879	363884	363889	363894
1	Reduction		4.4:1	19:1		72:1	109:1	270:1	389:1	590:1
2	Reduction absolute		57/13	3249/169		48735/676	2187/20	731025/2704	263169/676	59049/100
20	Max. feed velocity[1]	mm/s	61	14		3.7	2.4	1.0	0.7	0.5
21	Max. feed force (continuous)[1]	N	105	170		266	305	413	466	500
22	Max. feed force (intermittent)[1]	N	248	404		500	500	500	500	500
	Part Numbers		363866	363869		363875	363880	363885	363890	363895
1	Reduction		5.4:1	20:1		76:1	128:1	285:1	410:1	690:1
2	Reduction absolute		27/5	81/4		1215/16	41553/325	18225/64	6561/16	1121931/1625
20	Max. feed velocity[1]	mm/s	49	13		3.5	2.1	0.9	0.7	0.4
21	Max. feed force (continuous)[1]	N	112	173		270	322	420	474	500
22	Max. feed force (intermittent)[1]	N	266	411		500	500	500	500	500
	Part Numbers			363870		363876	363881	363886	363891	363896
1	Reduction			24:1		84:1	157:1	316:1	455:1	850:1
2	Reduction absolute			1539/65		185193/2197	19683/125	2777895/8788	5000211/10985	531441/625
20	Max. feed velocity[1]	mm/s		11		3.2	1.7	0.8	0.6	0.3
21	Max. feed force (continuous)[1]	N		184		280	345	435	491	500
22	Max. feed force (intermittent)[1]	N		437		500	500	500	500	500
4	Number of stages		1[5]	2	2	3	3	4	4	4
7	Max. efficiency gearhead incl. spindle	%	81[2]	67	67	57	57	47	47	47
8	Weight[1]	g	103	115	115	128	128	141	141	141
9	Average backlash no load	°	1.0	1.2	1.2	1.6	1.6	2.0	2.0	2.0
23	Mechanical positioning accuracy[1]	mm	0.039	0.040	0.040	0.042	0.042	0.044	0.044	0.044
10	Mass inertia gearhead incl. spindle[1]	gcm^2	1.0[3]	0.4	0.4	0.3	0.3	0.3	0.3	0.3
11	Gearhead length L1	mm	38.0	44.8	44.8	51.6	51.6	58.4	58.4	58.4

[1] based on spindle length 151 mm (standard length) [2] for reduction 1:1 = 96% [3] for reduction 1:1 = 10 gcm^2 [4] for reduction 1:1 = 4500 rpm [5] for reduction 1:1 = 0

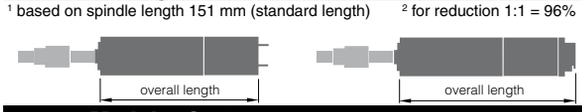

maxon Modular System

+ Motor	Page	+ Sensor/Brake	Page	**Overall length [mm]** = Motor length + gearhead length + (sensor / brake) + assembly parts							
A-max 19	125/126			64.2	71.0	71.0	77.8	77.8	84.6	84.6	84.6
A-max 19, 1.5 W	126	MR	315/317	69.3	76.1	76.1	82.9	82.9	89.7	89.7	89.7
A-max 19, 1.5 W	126	Enc 22	324	78.6	85.4	85.4	92.2	92.2	99.0	99.0	99.0
A-max 19, 1.5 W	126	MEnc 13	334	71.7	78.5	78.5	85.3	85.3	92.1	92.1	92.1
A-max 19, 2.5 W	127/128			66.8	73.6	73.6	80.4	80.4	87.2	87.2	87.2
A-max 19, 2.5 W	128	MR	315/317	71.1	77.9	77.9	84.7	84.7	91.5	91.5	91.5
A-max 19, 2.5 W	128	Enc 22	324	81.2	88.0	88.0	94.8	94.8	101.6	101.6	101.6
A-max 19, 2.5 W	128	MEnc 13	334	74.3	81.1	81.1	87.9	87.9	94.7	94.7	94.7
A-max 22	129-132			67.2	74.0	74.0	80.8	80.8	87.6	87.6	87.6
A-max 22	130/132	MR	315/317	72.2	79.0	79.0	85.8	85.8	92.6	92.6	92.6
A-max 22	130/132	Enc 22	324	81.6	88.4	88.4	95.2	95.2	102.0	102.0	102.0
A-max 22	130/132	MEnc 13	334	74.3	81.1	81.1	87.9	87.9	94.7	94.7	94.7
RE-max 21	155/156			64.2	71.0	71.0	77.8	77.8	84.6	84.6	84.6
RE-max 21, 3.5 W	156	MR	316/318	69.3	76.1	76.1	82.9	82.9	89.7	89.7	89.7
RE-max 21	157/158			66.8	73.6	73.6	80.4	80.4	87.2	87.2	87.2
RE-max 21, 6 W	158	MR	316/318	71.1	77.9	77.9	84.7	84.7	91.5	91.5	91.5
RE-max 24	159-162			67.2	74.0	74.0	80.8	80.8	87.6	87.6	87.6
RE-max 24	160/162	MR	316/318	72.2	79.0	79.0	85.8	85.8	92.6	92.6	92.6

Continuation of the modular system (irrespective of the spindle) on page 300.

Spindle Drive GP 22 S Ø22 mm, Metric spindle

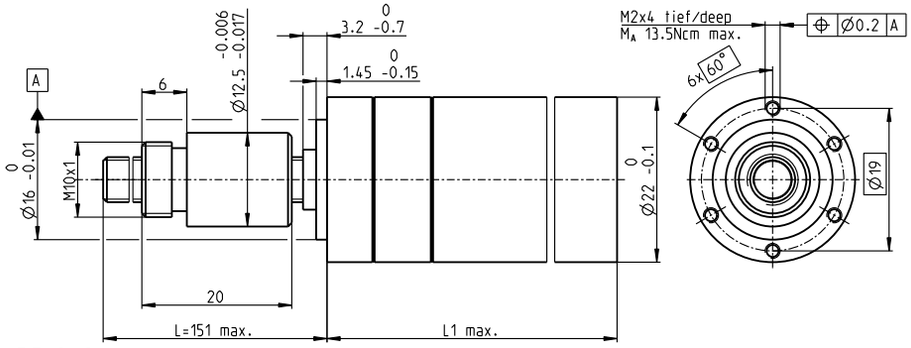

M 1:1

Technical Data

Spindle	M6 x 1, stainless steel
Standard length	151 mm
Special length (5 mm steps)	max. 300 mm
Nut (standard)	thread nut
Material	bronze
Axial play	< 0.008 mm
Planetary gearhead	straight teeth
Bearing	ball bearing/thrust roller bearing
Radial play, 5 mm from flange	< 0.05 mm
Axial play	preloaded
Recommended input speed[4]	< 8000 rpm
Recommended temperature range	-15…+80°C
Max. axial load (static)[1]	550 N

Number of stages	1	2	3	4
Max. radial load, 15 mm from flange	80 N	130 N	180 N	180 N

Stock program
Standard program
Special program (on request)

Spindle Drive Data

			Part Numbers							
			363826	363830	363834	363835	363840	363845	363850	363855
1	Reduction		1:1	14:1	29:1	53:1	89:1	198:1	333:1	479:1
2	Reduction absolute		1/1	225/16	729/25	3375/64	4617/52	50625/256	69255/208	124659/260
20	Max. feed velocity[1]	mm/s	101	9.5	4.6	2.5	1.5	0.7	0.4	0.3
21	Max. feed force (continuous)[1]	N	42	92	118	144	171	223	266	300
22	Max. feed force (intermittent)[1]	N	118	259	330	350	350	350	350	350
	Part Numbers		363827	364040		363836	363841	363846	363851	363856
1	Reduction		3.8:1	16:1		62:1	104:1	231:1	370:1	561:1
2	Reduction absolute		15/4	885/52		12825/208	87723/845	192375/832	10556001/28561	2368521/4225
20	Max. feed velocity[1]	mm/s	35	8.3		2.2	1.3	0.6	0.4	0.2
21	Max. feed force (continuous)[1]	N	60	97		152	180	235	275	316
22	Max. feed force (intermittent)[1]	N	167	270		350	350	350	350	350
	Part Numbers		363828	363831		363837	363842	363847	363852	363857
1	Reduction		4.4:1	19:1		72:1	109:1	270:1	389:1	590:1
2	Reduction absolute		57/13	3249/169		48735/676	2187/20	731025/2704	263169/676	59049/100
20	Max. feed velocity[1]	mm/s	30	7.0		1.9	1.2	0.5	0.3	0.2
21	Max. feed force (continuous)[1]	N	63	102		159	183	248	280	321
22	Max. feed force (intermittent)[1]	N	176	286		350	350	350	350	350
	Part Numbers		363829	363832		363838	363843	363848	363853	363858
1	Reduction		5.4:1	20:1		76:1	128:1	285:1	410:1	690:1
2	Reduction absolute		27/5	81/4		1215/16	41553/325	18225/64	6561/16	1121931/1625
20	Max. feed velocity[1]	mm/s	25	6.7		1.8	1.0	0.5	0.3	0.2
21	Max. feed force (continuous)[1]	N	67	104		162	193	252	285	339
22	Max. feed force (intermittent)[1]	N	188	291		350	350	350	350	350
	Part Numbers			363833		363839	363844	363849	363854	363859
1	Reduction			24:1		84:1	157:1	316:1	455:1	850:1
2	Reduction absolute			1539/65		185193/2197	19683/125	2777895/8788	5000211/10985	531441/625
20	Max. feed velocity[1]	mm/s		5.6		1.6	0.8	0.4	0.3	0.2
21	Max. feed force (continuous)[1]	N		111		168	207	261	295	350
22	Max. feed force (intermittent)[1]	N		310		350	350	350	350	350
4	Number of stages		1[5]	2	2	3	3	4	4	4
7	Max. efficiency gearhead incl. spindle	%	35[2]	29	29	25	25	20	20	20
8	Weight[1]	g	103	116	116	128	128	141	141	141
9	Average backlash no load	°	1.0	1.2	1.2	1.6	1.6	2.0	2.0	2.0
23	Mechanical positioning accuracy[1]	mm	0.034	0.034	0.034	0.034	0.034	0.037	0.037	0.037
10	Mass inertia gearhead incl. spindle[1]	gcm²	1.0[3]	0.4	0.4	0.3	0.3	0.3	0.3	0.3
11	Gearhead length L1	mm	38.0	44.8	44.8	51.6	51.6	58.4	58.4	58.4

[1] based on spindle length 151 mm (standard length) [2] for reduction 1:1 = 42% [3] for reduction 1:1 = 10 gcm² [4] for reduction 1:1 = 6088 rpm [5] for reduction 1:1 = 0

maxon Modular System

+ Motor	Page	+ Sensor/Brake	Page	Overall length [mm] = Motor length + gearhead length + (sensor/brake) + assembly parts							
EC 16, 60 W	180			94.2	101.0	101.0	107.8	107.8	114.6	114.6	114.6
EC 16, 60 W	180	MR	318	104.9	111.7	111.7	118.5	118.5	125.3	125.3	125.3
EC 22, 40 W	185			82.7	89.5	89.5	96.3	96.3	103.1	103.1	103.1
EC 22, 40 W	185	MR	318	88.7	95.5	95.5	102.3	102.3	109.1	109.1	109.1
EC 22, 100 W	187			100.9	107.7	107.7	114.5	114.5	121.3	121.3	121.3
EC 22, 100 W	187	MR	318	106.9	113.7	113.7	120.5	120.5	127.3	127.3	127.3
EC-max 16, 8 W	201			71.4	78.2	78.2	85.0	85.0	91.8	91.8	91.8
EC-max 16, 8 W	201	MR	318	78.7	85.5	85.5	92.3	92.3	99.1	99.1	99.1
EC-max 22, 12 W	202			70.1	76.9	76.9	83.7	83.7	90.5	90.5	90.5
EC-max 22, 12 W	202	MR	318	79.8	86.6	86.6	93.4	93.4	100.2	100.2	100.2
EC-max 22, 12 W	202	AB 20	370	105.7	112.5	112.5	119.3	119.3	126.1	126.1	126.1

Continuation of the modular system (irrespective of the spindle) on page 299.

Spindle Drive GP 32 S Ø32 mm, Ball Screw

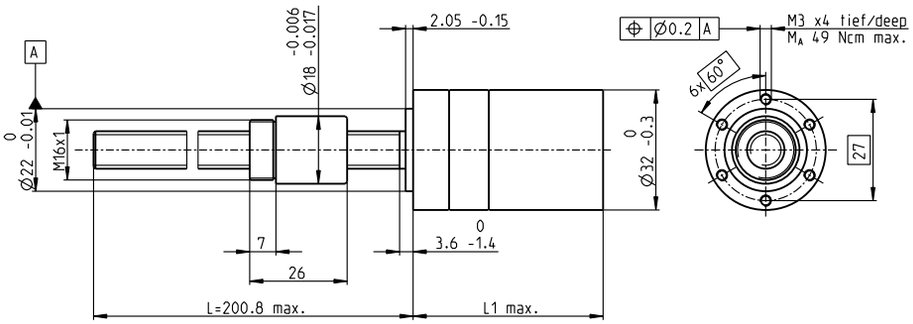

M 1:2

Technical Data

Spindle	Ø10 x 2, stainless steel
Standard length	200.8 mm
Special length (5 mm steps)	max. 600 mm
Nut (standard)	thread nut
Material	100CR6, hardened
Axial play	< 0.01 mm
Planetary gearhead	straight teeth
Bearing	ball bearing/thrust roller bearing
Radial play, 5 mm from flange	< 0.05 mm
Axial play	preloaded
Recommended input speed[4]	< 8000 rpm
Recommended temperature range	-15…+80°C
Max. axial load (static)[1]	2700 N
Number of stages	1 2 3 4
Max. radial load, 15 mm from flange	200 N 350 N 400 N 400 N

Stock program
Standard program
Special program (on request)

			Part Numbers							
			363970	363974	363979	363980	363985	363990	363995	364000
Spindle Drive Data										
1	Reduction		1:1	14:1	33:1	51:1	111:1	246:1	492:1	762:1
2	Reduction absolute		1/1	676/49	529/16	17576/343	13824/125	421824/1715	86112/175	19044/25
20	Max. feed velocity[1]	mm/s	133	19	8.1	5.2	2.4	1.1	0.5	0.3
21	Max. feed force (continuous)[1]	N	386	739	983	1137	1473	1921	2420	2700
22	Max. feed force (intermittent)[1]	N	1023	1956	2604	2700	2700	2700	2700	2700
	Part Numbers		363971	363975		363981	363986	363991	363996	364001
1	Reduction		3.7:1	18:1		66:1	123:1	295:1	531:1	913: 1
2	Reduction absolute		26/7	624/35		16224/245	6877/56	101062/343	331776/625	36501/40
20	Max. feed velocity[1]	mm/s	72	15		4.0	2.2	0.9	0.5	0.3
21	Max. feed force (continuous)[1]	N	474	803		1239	1524	2041	2482	2700
22	Max. feed force (intermittent)[1]	N	1255	2127		2700	2700	2700	2700	2700
	Part Numbers		363972	363976		363982	363987	363992	363997	364002
1	Reduction		4.8:1	21:1		79:1	132:1	318:1	589:1	1093:1
2	Reduction absolute		24/5	299/14		3887/49	3312/25	389376/1225	20631/35	279841/256
20	Max. feed velocity[1]	mm/s	56	13		3.4	2.0	0.8	0.5	0.2
21	Max. feed force (continuous)[1]	N	517	846		1315	1561	2092	2569	2700
22	Max. feed force (intermittent)[1]	N	1369	2239		2700	2700	2700	2700	2700
	Part Numbers		363973	363977		363983	363988	363993	363998	
1	Reduction		5.8:1	23:1		86:1	159:1	411:1	636:1	
2	Reduction absolute		23/4	576/25		14976/175	1587/10	359424/875	79488/125	
20	Max. feed velocity[1]	mm/s	46	12		3.1	1.7	0.6	0.4	
21	Max. feed force (continuous)[1]	N	551	872		1353	1661	2279	2636	
22	Max. feed force (intermittent)[1]	N	1458	2308		2700	2700	2700	2700	
	Part Numbers			363978		363984	363989	363994	363999	
1	Reduction			28:1		103:1	190:1	456:1	706:1	
2	Reduction absolute			138/5		3588/35	12167/64	89401/196	158171/224	
20	Max. feed velocity[1]	mm/s		9.5		2.6	1.4	0.6	0.4	
21	Max. feed force (continuous)[1]	N		931		1437	1762	2359	2700	
22	Max. feed force (intermittent)[1]	N		2465		2700	2700	2700	2700	
4	Number of stages		1[5]	2	2	3	3	4	4	4
7	Max. efficiency gearhead incl. spindle	%	75[2]	71	71	66	66	56	56	56
8	Weight[1]	g	304	331	331	359	359	387	387	387
9	Average backlash no load	°	0.7	0.8	0.8	1.0	1.0	1.0	1.0	1.0
23	Mechanical positioning accuracy[1]	mm	0.037	0.037	0.037	0.039	0.039	0.039	0.039	0.039
10	Mass inertia gearhead incl. spindle[1]	gcm^2	4.2[3]	0.9	0.9	0.7	0.7	0.7	0.7	0.7
11	Gearhead length L1	mm	51.0	57.7	57.7	64.4	64.4	71.1	71.1	71.1

[1] based on spindle length 200.8 mm (standard length) [2] for reduction 1:1 = 94% [3] for reduction 1:1 = 42.3 gcm^2 [4] for reduction 1:1 = 4000 rpm [5] for reduction 1:1 = 0

maxon Modular System

+ Motor	Page	+ Sensor/Brake	Page	**Overall length [mm]** = Motor length + gearhead length + (sensor/brake) + assembly parts							
RE 25	107/109			105.6	112.3	112.3	119.0	119.0	125.7	125.7	125.7
RE 25	107/109	MR	319	116.6	123.3	123.3	130.0	130.0	136.7	136.7	136.7
RE 25	107/109	Enc 22	324	119.7	126.4	126.4	133.1	133.1	139.8	139.8	139.8
RE 25	107/109	HED_5540	325/327	126.4	133.1	133.1	139.8	139.8	146.5	146.5	146.5
RE 25	107/109	DCT 22	336	127.9	134.6	134.6	141.3	141.3	148.0	148.0	148.0
RE 25, 20 W	108			94.1	100.8	100.8	107.5	107.5	114.2	114.2	114.2
RE 25, 20 W	108	MR	319	105.1	111.8	111.8	118.5	118.5	125.2	125.2	125.2
RE 25, 20 W	108	HED_5540	325/327	114.9	121.6	121.6	128.3	128.3	135.0	135.0	135.0
RE 25, 20 W	108	DCT 22	336	116.4	123.1	123.1	129.8	129.8	136.5	136.5	136.5
RE 25, 20 W	108	AB 28	372	128.2	134.9	134.9	141.6	141.6	148.3	148.3	148.3
RE 25, 20 W	108	HED_5540/AB 28	325/372	145.4	152.1	152.1	158.8	158.8	165.5	165.5	165.5
RE 25, 20 W	109	AB 28	372	139.7	146.4	146.4	153.1	153.1	159.8	159.8	159.8
RE 25, 20 W	109	HED_5540/AB 28	325/372	156.9	163.6	163.6	170.3	170.3	177.0	177.0	177.0
RE 30, 60 W	111			119.1	125.8	125.8	132.5	132.5	139.2	139.2	139.2
RE 30, 60 W	111	MR	320	130.5	137.2	137.2	143.9	143.9	150.6	150.6	150.6
RE 30, 60 W	111	HED_5540	325/327	139.9	146.6	146.6	153.3	153.3	160.0	160.0	160.0
RE 35, 90 W	112			122.1	128.8	128.8	135.5	135.5	142.2	142.2	142.2
RE 35, 90 W	112	MR	320	133.5	140.2	140.2	146.9	146.9	153.6	153.6	153.6
RE 35, 90 W	112	HED_5540	325/327	142.8	149.5	149.5	156.2	156.2	162.9	162.9	162.9
RE 35, 90 W	112	DCT 22	336	140.2	146.9	146.9	153.6	153.6	160.3	160.3	160.3
RE 35, 90 W	112	AB 28	372	158.2	164.9	164.9	171.6	171.6	178.3	178.3	178.3
RE 35, 90 W	112	HEDS 5540/AB 28	325/372	175.4	182.1	182.1	188.8	188.8	195.5	195.5	195.5

Continuation of the modular system (irrespective of the spindle) on pages 302 and 303.

Spindle Drive GP 32 S Ø32 mm, Metric spindle

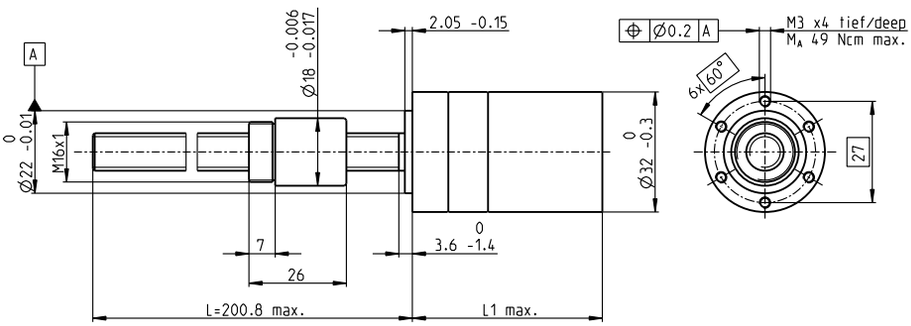

M 1:2

Technical Data

Spindle	M10 x 1, stainless steel
Standard length	200.8 mm
Special length (5 mm steps)	max. 600 mm
Nut (standard)	thread nut
Material	bronze
Axial play	< 0.008 mm
Planetary gearhead	straight teeth
Bearing	ball bearing/thrust roller bearing
Radial play, 5 mm from flange	< 0.05 mm
Axial play	preloaded
Recommended input speed[4]	< 8000 rpm
Recommended temperature range	-15…+80°C
Max. axial load (static)[1]	2700 N
Number of stages	1 2 3 4
Max. radial load, 15 mm from flange	200 N 350 N 400 N 400 N

Stock program
Standard program
Special program (on request)

Part Numbers

			363900	363904	363909	363910	363915	363920	363925	363930
Spindle Drive Data										
1	Reduction		1:1	14:1	33:1	51:1	111:1	246:1	492:1	762:1
2	Reduction absolute		1/1	676/49	529/16	17576/343	13824/125	421824/1715	86112/175	19044/25
20	Max. feed velocity[1]	mm/s	100	9.5	4.0	2.6	1.2	0.5	0.3	0.2
21	Max. feed force (continuous)[1]	N	183	400	533	616	798	1040	1311	1350
22	Max. feed force (intermittent)[1]	N	455	995	1324	1350	1350	1350	1350	1350
	Part Numbers		363901	363905		363911	363916	363921	363926	363931
1	Reduction		3.7:1	18:1		66:1	123:1	295:1	531:1	913: 1
2	Reduction absolute		26/7	624/35		16224/245	6877/56	101062/343	331776/625	36501/40
20	Max. feed velocity[1]	mm/s	36	7.4		2.0	1.1	0.5	0.3	0.1
21	Max. feed force (continuous)[1]	N	257	435		671	826	1105	1345	1350
22	Max. feed force (intermittent)[1]	N	638	1082		1350	1350	1350	1350	1350
	Part Numbers		363902	363906		363912	363917	363922	363927	363932
1	Reduction		4.8:1	21:1		79:1	132:1	318:1	589:1	1093:1
2	Reduction absolute		24/5	299/14		3887/49	3312/25	389376/1225	20631/35	279841/256
20	Max. feed velocity[1]	mm/s	28	6.3		1.7	1.0	0.4	0.2	0.1
21	Max. feed force (continuous)[1]	N	280	458		712	845	1133	1350	1350
22	Max. feed force (intermittent)[1]	N	696	1139		1350	1350	1350	1350	1350
	Part Numbers		363903	363907		363913	363918	363923	363928	
1	Reduction		5.8:1	23:1		86:1	159:1	411:1	636:1	
2	Reduction absolute		23/4	576/25		14976/175	1587/10	359424/875	79488/125	
20	Max. feed velocity[1]	mm/s	23	5.8		1.6	0.8	0.3	0.2	
21	Max. feed force (continuous)[1]	N	298	472		733	899	1234	1350	
22	Max. feed force (intermittent)[1]	N	742	1174		1350	1350	1350	1350	
	Part Numbers			363908		363914	363919	363924	363929	
1	Reduction			28:1		103:1	190:1	456:1	706:1	
2	Reduction absolute			138/5		3588/35	12167/64	89401/196	158171/224	
20	Max. feed velocity[1]	mm/s		4.8		1.3	0.7	0.3	0.2	
21	Max. feed force (continuous)[1]	N		504		778	955	1278	1350	
22	Max. feed force (intermittent)[1]	N		1253		1350	1350	1350	1350	
4	Number of stages		1[5]	2	2	3	3	4	4	4
7	Max. efficiency gearhead incl. spindle	%	22[2]	20	20	19	19	16	16	16
8	Weight[1]	g	304	331	331	359	359	387	387	387
9	Average backlash no load	°	0.7	0.8	0.8	1.0	1.0	1.0	1.0	1.0
23	Mechanical positioning accuracy[1]	mm	0.033	0.033	0.033	0.034	0.034	0.034	0.034	0.034
10	Mass inertia gearhead incl. spindle[1]	gcm²	3.0[3]	0.9	0.9	0.7	0.7	0.7	0.7	0.7
11	Gearhead length L1	mm	51.0	57.7	57.7	64.4	64.4	71.1	71.1	71.1

[1] based on Spindle length 200.8 mm (standard length) [2] for reduction 1:1 = 27% [3] for reduction 1:1 = 43.3 gcm² [4] for reduction 1:1 = 5984 rpm [5] for reduction 1:1 = 0

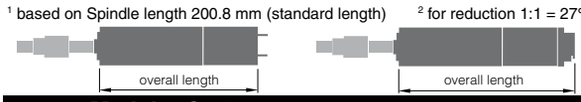

maxon Modular System

+ Motor	Page	+ Sensor/Brake	Page	**Overall length [mm]** = Motor length + gearhead length + (sensor/brake) + assembly parts							
A-max 26	133-140			95.8	102.5	102.5	109.2	109.2	115.9	115.9	115.9
A-max 26	134-140	MEnc 13	334	102.9	109.6	109.6	116.3	116.3	123.0	123.0	123.0
A-max 26	134-140	MR	319	104.6	111.3	111.3	118.0	118.0	124.7	124.7	124.7
A-max 26	134-140	Enc 22	324	110.2	116.9	116.9	123.6	123.6	130.3	130.3	130.3
A-max 26	134-140	HED_5540	325/327	114.2	120.9	120.9	127.6	127.6	134.3	134.3	134.3
A-max 32	141/143			114.0	120.7	120.7	127.4	127.4	134.1	134.1	134.1
A-max 32	142/144			112.6	119.3	119.3	126.0	126.0	132.7	132.7	132.7
A-max 32	142/144	MR	320	123.8	130.5	130.5	137.2	137.2	143.9	143.9	143.9
A-max 32	142/144	HED_5540	325/327	133.4	140.1	140.1	146.8	146.8	153.5	153.5	153.5
RE-max 29	163-166			95.8	102.5	102.5	109.2	109.2	115.9	115.9	115.9
RE-max 29	164/166	MR	319	104.6	111.3	111.3	118.0	118.0	124.7	124.7	124.7
EC 32, 80 W	192			111.1	117.8	117.8	124.5	124.5	131.2	131.2	131.2
EC 32, 80 W	192	HED_ 5540	326/328	129.5	136.2	136.2	142.9	142.9	149.6	149.6	149.6
EC 32, 80 W	192	Res 26	337	131.2	137.9	137.9	144.6	144.6	151.3	151.3	151.3
MCD EPOS, 60 W	292			171.1	177.8	177.8	184.5	184.5	191.2	191.2	191.2
MCD EPOS P 60 W	292			171.1	177.8	177.8	184.5	184.5	191.2	191.2	191.2

Continuation of the modular system (irrespective of the spindle) on pages 301 and 303.

Spindle Drive GP 32 S Ø32 mm, trapezoidal spindle

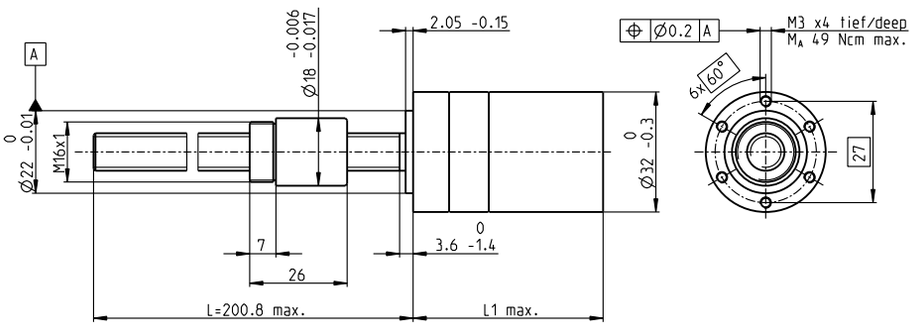

M 1:2

Technical Data

Spindle	TR10 x 2, stainless steel
Standard length	200.8 mm
Special length (5 mm steps)	max. 600 mm
Nut (standard)	thread nut
Material	bronze
Axial play	< 0.008 mm
Planetary gearhead	straight teeth
Bearing	ball bearing/thrust roller bearing
Radial play, 5 mm from flange	< 0.05 mm
Axial play	preloaded
Recommended input speed[4]	< 8000 rpm
Recommended temperature range	-15…+80°C
Max. axial load (static)[1]	2700 N
Number of stages	1 2 3 4
Max. radial load, 15 mm from flange	200 N 350 N 400 N 400 N

Stock program
Standard program
Special program (on request)

			Part Numbers							
			363936	363940	363945	363946	363951	363956	363961	363966
Spindle Drive Data										
1	Reduction		1:1	14:1	33:1	51:1	111:1	246:1	492:1	762:1
2	Reduction absolute		1/1	676/49	529/16	17576/343	13824/125	421824/1715	86112/175	19044/25
20	Max. feed velocity[1]	mm/s	186	19	8.1	5.2	2.4	1.1	0.5	0.3
21	Max. feed force (continuous)[1]	N	216	462	614	710	921	1200	1512	1530
22	Max. feed force (intermittent)[1]	N	528	1127	1500	1530	1530	1530	1530	1530
	Part Numbers		363937	363941		363947	363952	363957	363962	363967
1	Reduction		3.7:1	18:1		66:1	123:1	295:1	531:1	913: 1
2	Reduction absolute		26/7	624/35		16224/245	6877/56	101062/343	331776/625	36501/40
20	Max. feed velocity[1]	mm/s	72	15		4.0	2.2	0.9	0.5	0.3
21	Max. feed force (continuous)[1]	N	296	502		774	953	1275	1530	1530
22	Max. feed force (intermittent)[1]	N	723	1226		1530	1530	1530	1530	1530
	Part Numbers		363938	363942		363948	363953	363958	363963	363968
1	Reduction		4.8:1	21:1		79:1	132:1	318:1	589:1	1093:1
2	Reduction absolute		24/5	299/14		3887/49	3312/25	389376/1225	20631/35	279841/256
20	Max. feed velocity[1]	mm/s	56	13		3.4	2.0	0.8	0.5	0.2
21	Max. feed force (continuous)[1]	N	323	529		822	975	1308	1530	1530
22	Max. feed force (intermittent)[1]	N	789	1291		1530	1530	1530	1530	1530
	Part Numbers		363939	363943		363949	363954	363959	363964	
1	Reduction		5.8:1	23:1		86:1	159:1	411:1	636:1	
2	Reduction absolute		23/4	576/25		14976/175	1587/10	359424/875	79488/125	
20	Max. feed velocity[1]	mm/s	46	12		3.1	1.7	0.6	0.4	
21	Max. feed force (continuous)[1]	N	344	545		846	1038	1424	1530	
22	Max. feed force (intermittent)[1]	N	840	1330		1530	1530	1530	1530	
	Part Numbers			363944		363950	363955	363960	363965	
1	Reduction			28:1		103:1	190:1	456:1	706:1	
2	Reduction absolute			138/5		3588/35	12167/64	89401/196	158171/224	
20	Max. feed velocity[1]	mm/s		9.5		1.3	0.7	0.3	0.2	
21	Max. feed force (continuous)[1]	N		582		898	1101	1475	1530	
22	Max. feed force (intermittent)[1]	N		1420		1530	1530	1530	1530	
4	Number of stages		1[5]	2	2	3	3	4	4	4
7	Max. efficiency gearhead incl. spindle	%	38[2]	35	35	33	33	28	28	28
8	Weight[1]	g	304	331	331	359	359	387	387	387
9	Average backlash no load	°	0.7	0.8	0.8	1.0	1.0	1.0	1.0	1.0
23	Mechanical positioning accuracy[1]	mm	0.035	0.035	0.035	0.037	0.037	0.037	0.037	0.037
10	Mass inertia gearhead incl. spindle[1]	gcm^2	2.4[3]	0.9	0.9	1.0	1.0	1.0	1.0	1.0
11	Gearhead length L1	mm	51.0	57.7	57.7	64.4	64.4	71.1	71.1	71.1

[1] based on spindle length 200.8 mm (standard length) [2] for reduction 1:1 = 47% [3] for reduction 1:1 = 42.3 gcm^2 [4] for reduction 1:1 = 5569 rpm [5] for reduction 1:1 = 0

maxon Modular System

+ Motor	Page	+ Sensor/Brake	Page	**Overall length [mm]** = Motor length + gearhead length + (sensor/brake) + assembly parts							
EC-max 22, 25 W	203			99.6	106.3	106.3	113.0	113.0	119.7	119.7	119.7
EC-max 22, 25 W	203	MR	318	109.3	116.0	116.0	122.7	122.7	129.4	129.4	129.4
EC-max 22, 25 W	203	AB 20	370	135.4	142.1	142.1	148.8	148.8	155.5	155.5	155.5
EC-max 30, 40 W	204			93.1	99.8	99.8	106.5	106.5	113.2	113.2	113.2
EC-max 30, 40 W	204	MR	319	105.3	112.0	112.0	118.7	118.7	125.4	125.4	125.4
EC-max 30, 40 W	204	HEDL5540	328	113.7	120.4	120.4	127.1	127.1	133.8	133.8	133.8
EC-max 30, 40 W	204	AB 20	370	128.9	135.6	135.6	142.3	142.3	148.3	148.3	148.3
EC-max 30, 40 W	204	HEDL 5540 / AB	328/370	149.5	156.2	156.2	162.9	162.9	169.6	169.6	169.6
EC-4pole 22, 90 W	211			99.7	106.4	106.4	113.1	113.1	119.8	119.8	119.8
EC-4pole 22, 90 W	211	HEDL 5540	329	121.2	127.9	127.9	134.6	134.6	141.3	141.3	141.3
EC-4pole 22,120 W	212			117.1	123.8	123.8	130.5	130.5	137.2	137.2	137.2
EC-4pole 22,120 W	212	HEDL 5540	329	138.6	145.3	145.3	152.0	152.0	158.7	158.7	158.7
EC-i 40, 50 W	228			82.7	89.4	89.4	96.1	96.1	102.8	102.8	102.8
EC-i 40, 50 W	228	16 EASY	320	94.4	101.1	101.1	107.8	107.8	114.5	114.5	114.5
EC-i 40, 50 W	228	HEDL 5540	329	105.7	112.4	112.4	119.1	119.1	125.8	125.8	125.8
EC-i 40, 70 W	229			92.7	99.4	99.4	106.1	106.1	112.8	112.8	112.8
EC-i 40, 70 W	229	16 EASY	320	104.4	111.1	111.1	117.8	117.8	124.5	124.5	124.5
EC-i 40, 70 W	229	HEDL 5540	329	115.7	122.4	122.4	129.1	129.1	135.8	135.8	135.8

Continuation of the modular system (irrespective of the spindle) on pages 301 and 302.

Spindle Drive Options

Option	to GP 6 S	to GP 8 S
Special length **Order reference SPIN01**	Without specification, the spindle is supplied in the standard length 45 mm. Special lengths can be ordered in 5 mm steps up to the stated maximum length.	Without specification, the spindle is supplied in the standard length 56 mm. Special lengths can be ordered in 5 mm steps up to the stated maximum length.
Spindle end **Order reference SPIN02** In order to support the end of the spindle by an additional bearing, it can be delivered according to the illustration. Customer specific spindle ends on request.	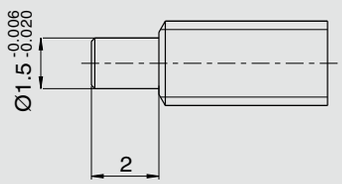	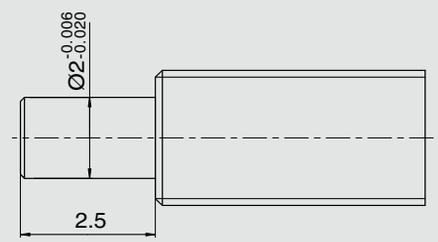
Flange nut **Order reference SPIN04** Flange nut instead of the standard thread nut. If using a ball screw, the rectangular mounting flange (SPIN 06) must be used.	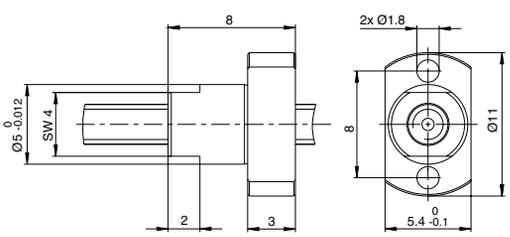	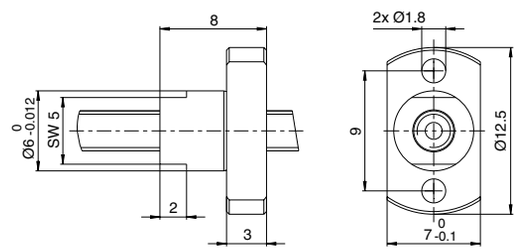
Low backlash ball screw nut **Order reference SPIN05**	Not available for GP 6 S.	Not available for GP 8 S.
Rectangular mounting flange **Order reference SPIN06** Spindle drive with rectangular mounting flange allows mounting from the gearhead side.	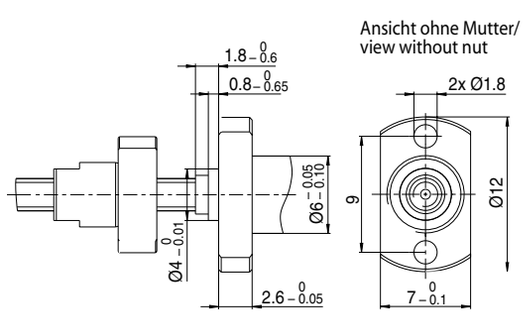	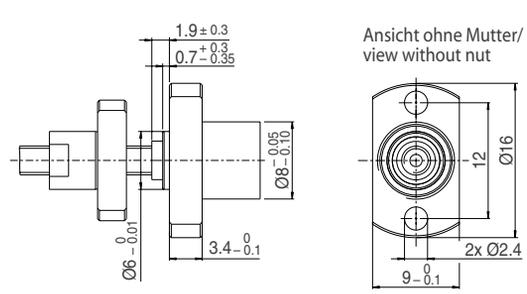

Spindle Drive Options

Option	to GP 16 S	to GP 22 S
Special length **Order reference SPIN01**	Without specification, the spindle is supplied in the standard length 102 mm. Special lengths can be ordered in 5 mm steps up to the stated maximum length.	Without specification, the spindle is supplied in the standard length 151 mm. Special lengths can be ordered in 5 mm steps up to the stated maximum length.
Spindle end **Order reference SPIN02** In order to support the end of the spindle by an additional bearing, it can be delivered according to the illustration. Customer specific spindle ends on request.	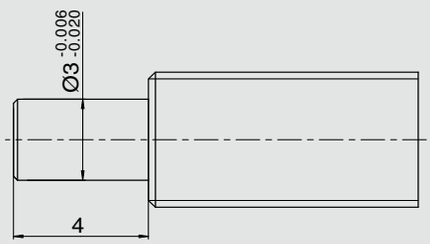	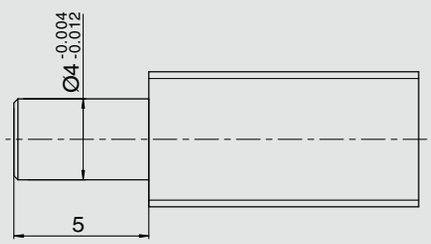
Flange nut **Order reference SPIN04** Flange nut instead of the standard thread nut. If using a ball screw, the rectangular mounting flange (SPIN 06) must be used.	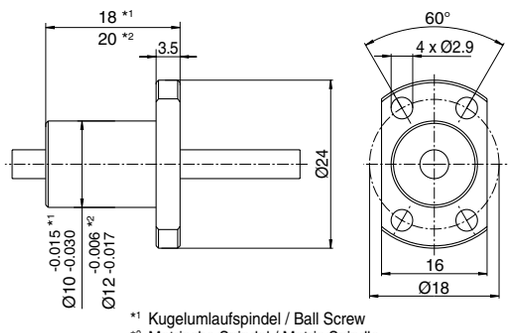 *1 Kugelumlaufspindel / Ball Screw *2 Metrische Spindel / Metric Spindle	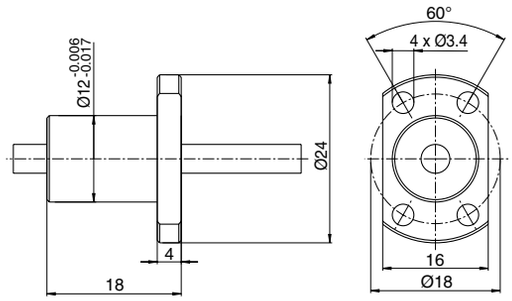
Low backlash ball screw nut **Order reference SPIN05**	Not available for GP 16 S.	Axial play is almost eliminated through increased pre-loading of the ball screw nut. Although, the increased load can lead to greater wear.
Rectangular mounting flange **Order reference SPIN06** Spindle drive with rectangular mounting flange allows mounting from the gearhead side. If using a ball screw with flange nut, the rectangular assembly flange must be used for mounting.	On request.	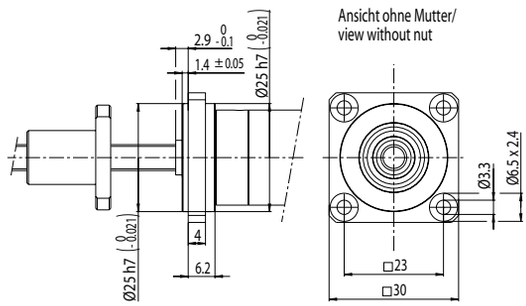

Spindle Drive Options

Option	to GP 32 S
Special length **Order reference SPIN01**	Without specification, the spindle is supplied in the standard length 200.8 mm. Special lengths can be ordered in 5 mm steps up to the stated maximum length.
Spindle end **Order reference SPIN02** In order to support the end of the spindle by an additional bearing, it can be delivered according to the illustration. Customer specific spindle ends on request.	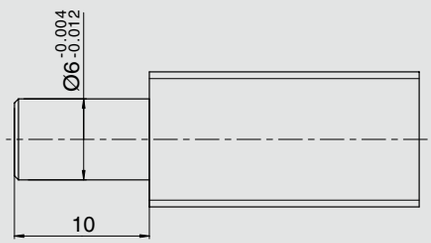
Flange nut **Order reference SPIN04** Flange nut instead of the standard thread nut. If using a ball screw, the rectangular mounting flange (SPIN 06) must be used.	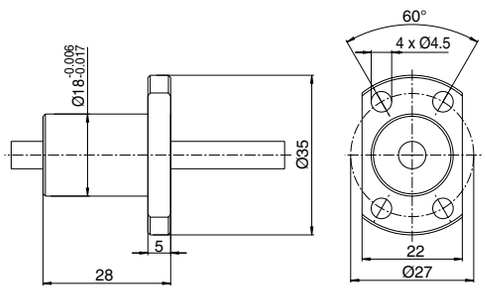
Low backlash ball screw nut **Order reference SPIN05**	Axial play is almost eliminated through increased pre-loading of the ball screw nut. Although, the increased load can lead to greater wear.
Rectangular mounting flange **Order reference SPIN06** Spindle drive with rectangular mounting flange allows mounting from the gearhead side. If using a ball screw with flange nut, the rectangular assembly flange must be used for mounting.	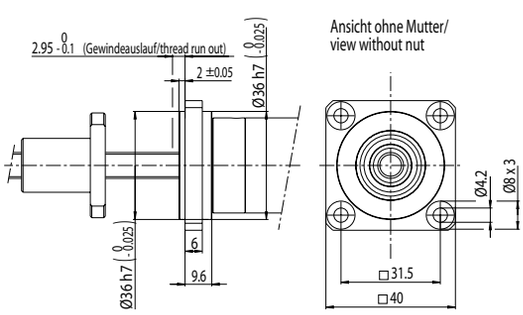

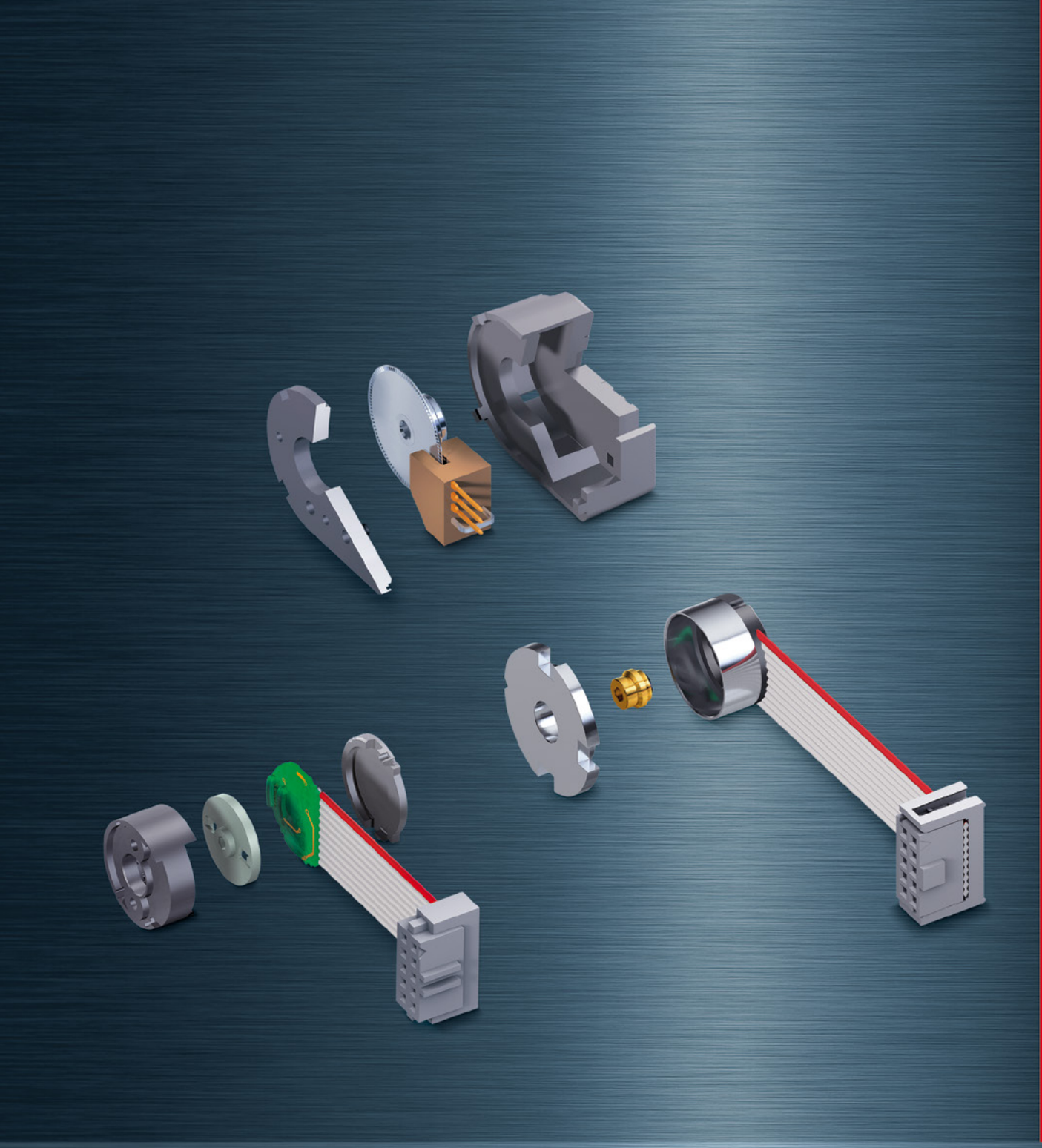

maxon sensor

maxon sensor

Robust encoders, DC tachometers, and resolvers with high accuracy and high signal resolution. Due to resonance, these are mainly mounted on motors with a continuous shaft. The assembly requires adjustment to the motors and may only be done in the delivery plant.

MILE Encoder	308–310
EASY Encoder	311
MR Encoder	312–320
Optical Encoder	321–332
Hall effect Encoder	333–335
DC Tacho/Resolver	336–337

Encoder MILE 256–2048 CPT, 2 Channels, with Line Driver

NEW

Integrated into motor

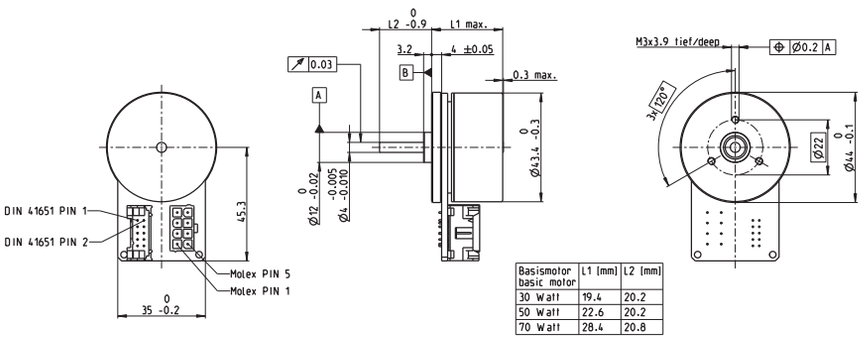

Basismotor basic motor	L1 [mm]	L2 [mm]
30 Watt	19.4	20.2
50 Watt	22.6	20.2
70 Watt	28.4	20.8

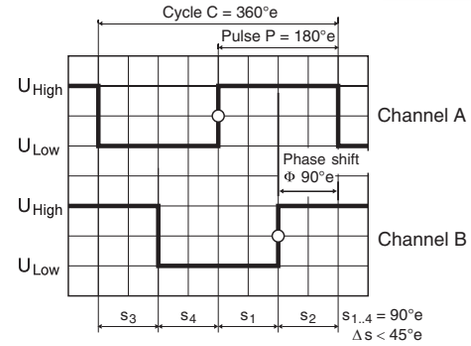

Direction of rotation cw (definition cw p. 78)

Stock program
Standard program
Special program (on request)

Type (provisonal)	Article Numbers 462002	462003	462004	462005
Counts per turn	256	512	1024	2048
Number of channels	2	2	2	2
Max. operating frequency (kHz)	500	500	500	500
Max. speed (rpm)	10000	10000	10000	10000

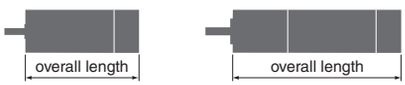

maxon Modular System

+ Motor	Page	+ Gearhead	Page	+ Brake	Page	Overall length [mm] / ● see Gearhead			
EC 45 flat, 30 W	231					19.4	19.4	19.4	19.4
EC 45 flat, 30 W	231	GP 42, 3 - 15 Nm	284			●	●	●	●
EC 45 flat, 30 W	231	GS 45, 0.5 - 2.0 Nm	286			●	●	●	●
EC 45 flat, 50 W	232					22.6	22.6	22.6	22.6
EC 45 flat, 50 W	232	GP 42, 3 - 15 Nm	284			●	●	●	●
EC 45 flat, 50 W	232	GS 45, 0.5 - 2.0 Nm	286			●	●	●	●
EC 45 flat, 70 W	233					28.4	28.4	28.4	28.4
EC 45 flat, 70 W	233	GP 42, 3 - 15 Nm	284			●	●	●	●
EC 45 flat, 70 W	233	GS 45, 0.5 - 2.0 Nm	286			●	●	●	●

Technical Data

Supply voltage V_{CC}	5 V ± 10%
Output signal	CMOS and TTL compatible
State length s_n 90°e (1000 rpm)	45…135°e
Signal rise time (typically, at C_L = 25 pF, R_L = 1 kΩ, 25 °C)	100 ns
Signal fall time (typically, at C_L = 25 pF, R_L = 1 kΩ, 25 °C)	100 ns
Operating temperature range	-40…+100 °C
Moment of inertia of code wheel	≤ 3.5 gcm²
Output current per channel	max. 4 mA
Open collector output of the Hall sensors with integrated pull-up resistor	10 kΩ ± 20%
Wiring diagram for Hall sensors see p. 35	

Additional information can be found under 'Downloads' in the maxon online shop.

Pin Allocation

Connection motor
Pin 1 Hall sensor 1*
Pin 2 Hall sensor 2*
Pin 3 V_{Hall} 4.5...18 VDC
Pin 4 Motor winding 3
Pin 5 Hall sensor 3*
Pin 6 GND
Pin 7 Motor winding 1
Pin 8 Motor winding 2

*Internal pull-up (10 kΩ) on pin 3 (V_{Hall})

Connection Encoder
Pin 1 N.C.
Pin 2 V_{CC}
Pin 3 GND
Pin 4 N.C.
Pin 5 Channel A\
Pin 6 Channel A
Pin 7 Channel B\
Pin 8 Channel B
Pin 9 Do not connect
Pin 10 Do not connect

Connector:
39-28-1083 Molex
DIN 41651/EN 60603-13

Note: Pull-down resistors < 100 kΩ on the encoder outputs are not permitted. Pull-up resistors are permitted, but not required.

Connection example

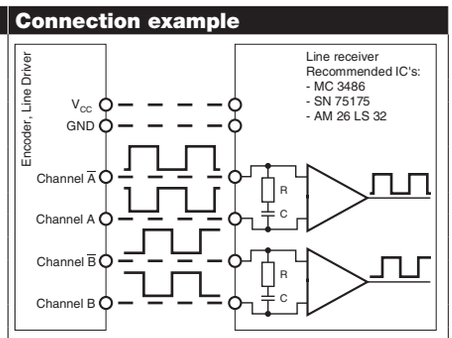

Opt. terminal resistance R = typical 120 Ω
Capacitor C ≥ 0.1 nF per m line length

Encoder MILE 512–4096 CPT, 2 Channels, with Line Driver

Integrated into motor

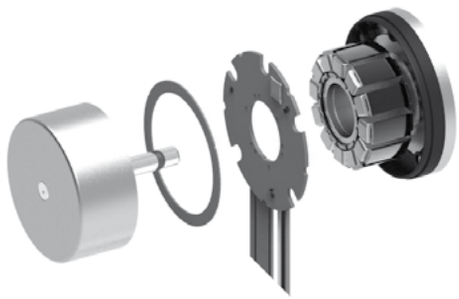

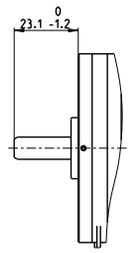

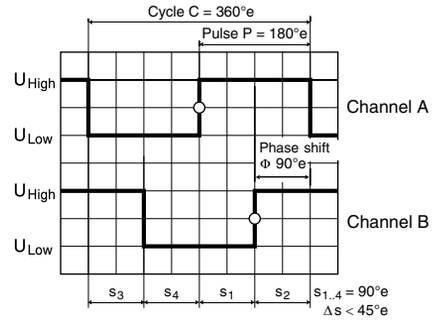

Direction of rotation cw (definition cw p. 78)

Stock program
Standard program
Special program (on request)

Part Numbers	421985	421986	421987	421988
Type				
Counts per turn	512	1024	2048	4096
Number of channels	2	2	2	2
Max. operating frequency (kHz)	500	500	500	500
Max. speed (rpm)	6000	6000	6000	6000

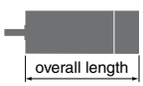

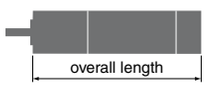

maxon Modular System

+ Motor	Page	+ Gearhead	Page	+ Brake	Page	Overall length [mm] / ● see Gearhead			
EC 60 flat, IP00	236					39.0	39.0	39.0	39.0
EC 60 flat, IP00	236	GP 52, 4 - 30 Nm	287			●	●	●	●
EC 60 flat, IP54	236					43.0	43.0	43.0	43.0
EC 60 flat, IP54	236	GP 52, 4 - 30 Nm	287			●	●	●	●

Technical Data

Supply voltage V_{CC}	5 V ± 10%
Output signal	CMOS and TTL compatible
State length s_n (1000 rpm)	90°e ± <45°
Signal rise time (typically, at C_L = 25 pF, R_L = 1 kΩ, 25 °C)	100 ns
Signal fall time (typically, at C_L = 25 pF, R_L = 1 kΩ, 25 °C)	100 ns
Operating temperature range	-40…+100 °C
Moment of inertia of code wheel	≤ 13 gcm²
Output current per channel	max. 4 mA
Open collector output of the Hall sensors with integrated pull-up resistor	10 kΩ ± 20%
Wiring diagram for Hall sensors see p. 35	

Additional information can be found under 'Downloads' in the maxon online shop.

Pin Allocation

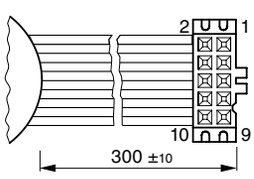

1	N.C.
2	V_{CC}
3	GND
4	N.C.
5	Channel $\overline{A}$
6	Channel A
7	Channel $\overline{B}$
8	Channel B
9	Do not connect
10	Do not connect

DIN Connector 41651/EN 60603-13
flat ribbon cable AWG 28

Note: Pull-down resistors < 100 kΩ on the encoder outputs are not permitted. Pull-up resistors are permitted, but not required.

Connection example

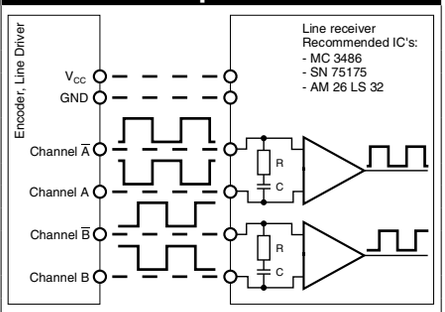

Opt. terminal resistance R = typical 120 Ω
Capacitor C ≥ 0.1 nF per m line length

Encoder MILE 512–6400 CPT, 2 Channels, with Line Driver RS 422

Integrated into motor

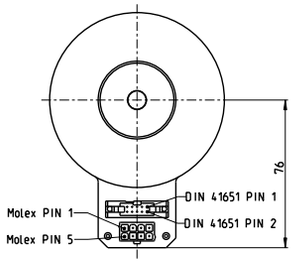

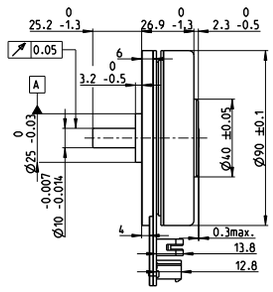

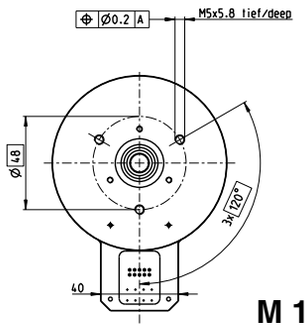

M 1:3

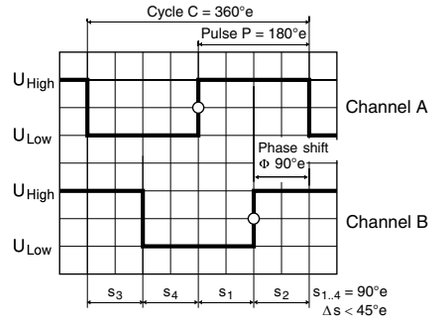

Sense of rotation cw (definition cw p. 78)

Stock program
Standard program
Special program (on request)

Type	Part Numbers							
	453234	409996	453233	411964	453232	411965	453231	411966
Counts per turn	512	800	1024	1600	2048	3200	4096	6400
Number of channels	2	2	2	2	2	2	2	2
Max. operating frequency (kHz)	500	500	500	500	500	500	500	500
Max. speed (rpm)	5000	5000	5000	5000	5000	5000	5000	4650

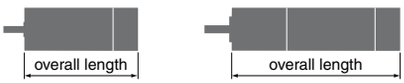

maxon Modular System

+ Motor	Page	+ Gearhead	Page	+ Brake	Page	Overall length [mm] / ● see Gearhead							
EC 90 flat	237					29.2	29.2	29.2	29.2	29.2	29.2	29.2	29.2
EC 90 flat	237	GP 52, 4 - 30 Nm	287			●	●	●	●	●	●	●	●

Technical Data

Supply voltage V_{CC}	5 V ± 10%
Output signal	EIA Standard RS422
driver used:	AM26C31QD
State length s_n (500 rpm)	90°e ± <45°
Signal rise and fall times (typically, at C_L = 120 pF, R_L = 100 Ω)	20 ns
Operating temperature range	-40…+100 °C
Moment of inertia of code wheel	≤ 65 gcm²
Output current per channel	min. -20 mA, max. 20 mA
Wiring diagram for Hall sensors see p. 35	

Additional information can be found under 'Downloads' in the maxon online shop.

Pin Allocation

Connection motor

Pin 1 Hall sensor 1*
Pin 2 Hall sensor 2*
Pin 3 V_{Hall} 4.5...18 VDC
Pin 4 Motor winding 3
Pin 5 Hall sensor 3*
Pin 6 GND
Pin 7 Motor winding 1
Pin 8 Motor winding 2

*Internal pull-up (10 kΩ) on pin 3 (V_{Hall})

Connection Encoder

Pin 1 N.C.
Pin 2 V_{CC}
Pin 3 GND
Pin 4 N.C.
Pin 5 Channel A\
Pin 6 Channel A
Pin 7 Channel B\
Pin 8 Channel B
Pin 9 Do not connect
Pin 10 Do not connect

Connector:
39-28-1083 Molex
DIN 41651/EN 60603-13

Connection example

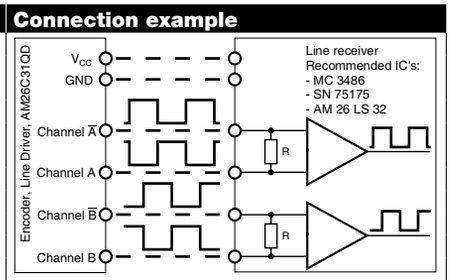

Opt. terminal resistance R = typical 120 Ω

Encoder 16 EASY 128–1024 CPT, 3 Channels, with Line Driver RS 422 NEW

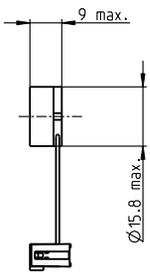

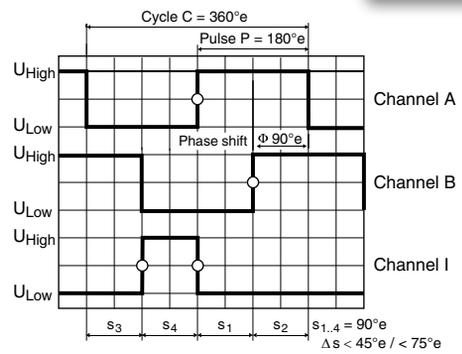

Direction of rotation cw (definition cw p. 78)

Stock program
Standard program
Special program (on request)

Type	Part Numbers 462920	462921	465801	465802
Counts per turn	128	256	512	1024
Number of channels	3	3	3	3
Max. operating frequency (kHz)	500	500	500	500
Max. speed (rpm)	30000	30000	30000	30000
Phase shift Φ (°e)	90 ± 45	90 ± 45	90 ± 75	90 ± 75
Index pulse width (°e)	90 ± 45	90 ± 45	90 ± 75	90 ± 75
Hysteresis (°mech)	0.70	0.35	0.35	0.35

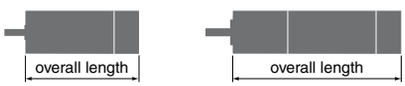

maxon Modular System

+ Motor	Page	+ Gearhead	Page	+ Brake	Page	Overall length [mm] / ● see Gearhead			
EC-i 40, 50 W	228					37.7	37.7	37.7	37.7
EC-i 40, 50 W	228	GP 32, 1 - 6 Nm	277			●	●	●	●
EC-i 40, 50 W	228	GP 32 S	301-303			●	●	●	●
EC-i 40, 50 W	228	GP 42, 3 - 15 Nm	284			●	●	●	●
EC-i 40, 70 W	229					47.7	47.7	47.7	47.7
EC-i 40, 70 W	229	GP 32, 1 - 6 Nm	277			●	●	●	●
EC-i 40, 70 W	229	GP 32 S	301-303			●	●	●	●
EC-i 40, 70 W	229	GP 42, 3 - 15 Nm	284			●	●	●	●

Technical Data

Supply voltage V_{CC}	5 V ± 10%
Output signal	EIA Standard RS 422
Operating temperature range	-40…+100°C
Moment of inertia of code wheel	≤ 0.09 gcm²
Output current per channel	+/- 20 mA
Min. state duration s	500 ns
Signal rise and fall times (typically, at C_L = 200 pF, R_L = 100 Ω)	20 ns

Additional information can be found in themaxon online shop under downloads.

The index signal I is synchronized with channel A or B.

Pin Allocation

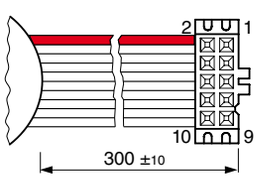

1 Do not connect[1]
2 V_{CC}
3 GND
4 Do not connect[1]
5 Channel $\overline{A}$
6 Channel A
7 Channel $\overline{B}$
8 Channel B
9 Channel $\overline{I}$ (Index)
10 Channel I (Index)

DIN Connector 41651/
EN 60603-13
flat band cable AWG 28

[1] Applying voltage to these pins can destroy the encoder.

Connection example

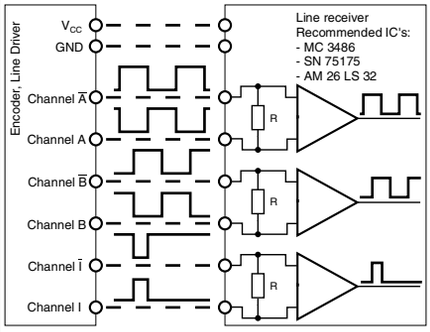

Opt. terminal resistance R = typical 120 Ω

Encoder MR Type S, 16 CPT, 2 Channels

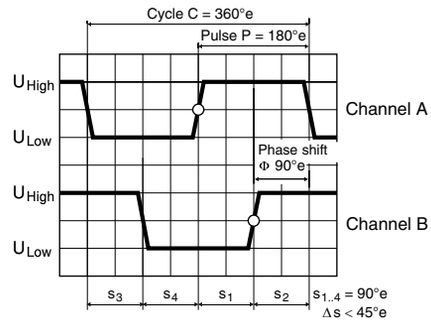

Direction of rotation cw (definition cw p. 78)

Stock program
Standard program
Special program (on request)

Type	Part Numbers 201933	224702
Counts per turn	16	16
Number of channels	2	2
Max. operating frequency (kHz)	8	8
Max. speed (rpm)	30 000	30 000

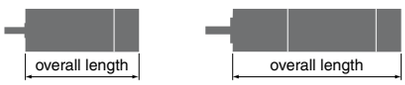

maxon Modular System

+ Motor	Page	+ Gearhead	Page	+ Brake	Page	Overall length [mm] / ● see Gearhead	
RE 10, 0.75 W	83					22.8	
RE 10, 0.75 W	83	GP 10, 0.005 - 0.15 Nm	244/245			●	
RE 10, 1.5 W	85					30.4	
RE 10, 1.5 W	85	GP 10, 0.005 - 0.15 Nm	244/245			●	
RE 13, 0.75 W	88						26.3
RE 13, 0.75 W	89						28.7
RE 13, 0.75 W	89	GP 13, 0.05 - 0.15 Nm	247				●
RE 13, 0.75 W	89	GP 13, 0.2 - 0.35 Nm	248				●
RE 13, 2 W	92						38.5
RE 13, 2 W	93						40.9
RE 13, 2 W	93	GP 13, 0.05 - 0.15 Nm	247				●
RE 13, 2 W	93	GP 13, 0.2 - 0.35 Nm	248				●
RE 13, 1.5 W	96						28.4
RE 13, 1.5 W	97						30.8
RE 13, 1.5 W	97	GP 13, 0.05 - 0.15 Nm	247				●
RE 13, 1.5 W	97	GP 13, 0.2 - 0.35 Nm	248				●
RE 13, 3 W	100						40.6
RE 13, 3 W	101						43.0
RE 13, 3 W	101	GP 13, 0.05 - 0.15 Nm	247				●
RE 13, 3 W	101	GP 13, 0.2 - 0.35 Nm	248				●
A-max 12, 0.5 W	120					25.3	
A-max 12, 0.5 W	120	GP 10, 0.01 - 0.15 Nm	245			●	
A-max 12, 0.5 W	120	GS 12, 0.01 - 0.03 Nm	246			●	
A-max 12, 0.5 W	120	GP 13, 0.05 - 0.15 Nm	247			●	
A-max 12, 0.5 W	120	GP 13, 0.2 - 0.35 Nm	248			●	
RE-max 13, 0.75 W	148						25.2
RE-max 13, 0.75 W	148	GP 13, 0.05 - 0.15 Nm	247				●
RE-max 13, 0.75 W	148	GP 13, 0.2 - 0.35 Nm	248				●
RE-max 13, 2 W	150						36.2
RE-max 13, 2 W	150	GP 13, 0.05 - 0.15 Nm	247				●
RE-max 13, 2 W	150	GP 13, 0.2 - 0.35 Nm	248				●

Technical Data

Supply voltage V_{CC}	2.7 - 5.5 V
Output signal V_{CC} = 5 VDC	TTL compatible
Phase shift Φ	90°e ± 45°e
Operating temperature range	-25…+85 °C
Moment of inertia of code wheel	≤ 0.005 gcm²
Output current per channel	max. 5 mA

Pin Allocation

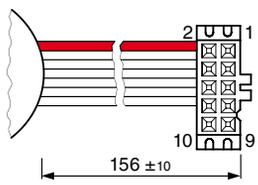

1 Motor +
2 V_{CC}
3 Channel A
4 Channel B
5 GND
6 Motor –

DIN Connector 41651/
EN 60603-13
flat band cable AWG 28

Connection example

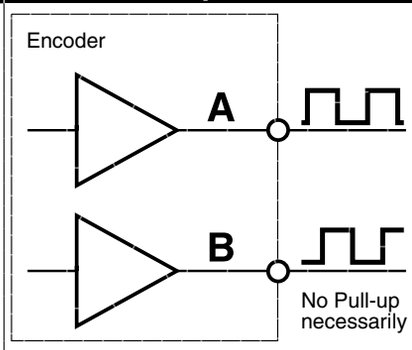

Encoder MR Type S, 64–256 CPT, 2 Channels, with Line Driver

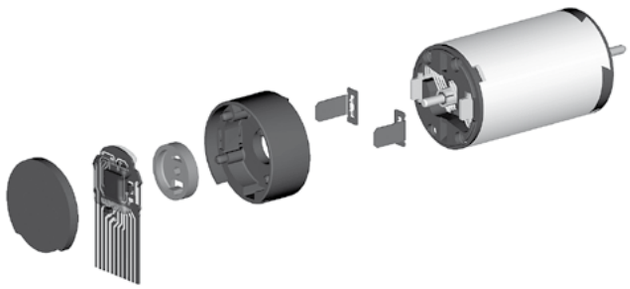

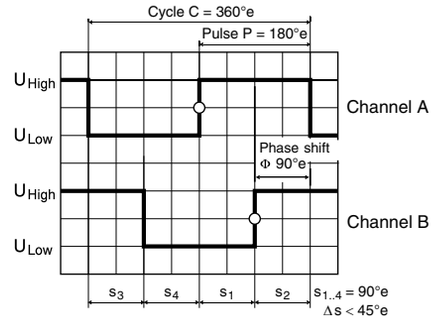

Direction of rotation cw (definition cw p. 78)

Stock program
Standard program
Special program (on request)

Type	Part Numbers 323049	323050	334910	323051	323052	323053	323054
Counts per turn	64	64	100	128	128	256	256
Number of channels	2	2	2	2	2	2	2
Max. operating frequency (kHz)	80	80	100	160	160	320	320
Max. speed (rpm)	75000	75000	60000	75000	75000	75000	75000

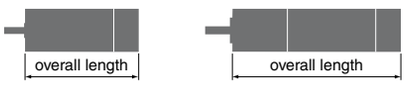

maxon Modular System

+ Motor	Page	+ Gearhead	Page	+ Brake	Page	Overall length [mm] / ● see Gearhead						
RE 8, 0.5 W, A	81							22.6				
RE 8, 0.5 W, A	81	GP 8, 0.01 - 0.1 Nm	243					●				
RE 8, 0.5 W, A	81	GP 8 S	294–295					●				
RE 10, 0.75 W	83					22.8			22.8		22.8	
RE 10, 0.75 W	83	GP 10, 0.005 - 0.15 Nm	244/245			●			●		●	
RE 10, 1.5 W	85					30.4			30.4		30.4	
RE 10, 1.5 W	85	GP 10, 0.005 - 0.15 Nm	244/245			●			●		●	
RE 13, 0.75 W	88						26.3			26.3		26.3
RE 13, 0.75 W	89						28.7			28.7		28.7
RE 13, 0.75 W	89	GP 13, 0.05 - 0.15 Nm	247				●			●		●
RE 13, 0.75 W	89	GP 13, 0.2 - 0.35 Nm	248				●			●		●
RE 13, 2 W	92						38.5			38.5		38.5
RE 13, 2 W	93						40.9			40.9		40.9
RE 13, 2 W	93	GP 13, 0.05 - 0.15 Nm	247				●			●		●
RE 13, 2 W	93	GP 13, 0.2 - 0.35 Nm	248				●			●		●
RE 13, 1.5 W	96						28.4			28.4		28.4
RE 13, 1.5 W	97						30.8			30.8		30.8
RE 13, 1.5 W	97	GP 13, 0.05 - 0.15 Nm	247				●			●		●
RE 13, 1.5 W	97	GP 13, 0.2 - 0.35 Nm	248				●			●		●
RE 13, 3 W	100						40.6			40.6		40.6
RE 13, 3 W	101						43.0			43.0		43.0
RE 13, 3 W	101	GP 13, 0.05 - 0.15 Nm	247				●			●		●
RE 13, 3 W	101	GP 13, 0.2 - 0.35 Nm	248				●			●		●
A-max 12, 0.5 W	120					25.3			25.3		25.3	
A-max 12, 0.5 W	120	GP 10, 0.01 - 0.15 Nm	245			●			●		●	
A-max 12, 0.5 W	120	GS 12, 0.01 - 0.03 Nm	246			●			●		●	
A-max 12, 0.5 W	120	GP 13, 0.05 - 0.15 Nm	247			●			●		●	
A-max 12, 0.5 W	120	GP 13, 0.2 - 0.35 Nm	248			●			●		●	
RE-max 13, 0.75 W	148						25.2			25.2		25.2
RE-max 13, 0.75 W	148	GP 13, 0.05 - 0.15 Nm	247				●			●		●
RE-max 13, 0.75 W	148	GP 13, 0.2 - 0.35 Nm	248				●			●		●
RE-max 13, 2 W	150						36.2			36.2		36.2
RE-max 13, 2 W	150	GP 13, 0.05 - 0.15 Nm	247				●			●		●
RE-max 13, 2 W	150	GP 13, 0.2 - 0.35 Nm	248				●			●		●

Technical Data

Supply voltage V_{CC}	5 V ± 5%
Output signal	TTL compatible
Phase shift Φ	90°e ± 45°e
Operating temperature range	-25…+85 °C
Moment of inertia of code wheel	≤ 0.005 gcm²
Output current per channel	max. 5 mA

Pin Allocation

Part Numbers 323049 – 323054
Pin 1 – 10 / X = 0.3 ±0.05 / Y = 11 –0.1 / L = 80 ±3
Compatible connector:
Molex 52207-1085, Tyco 1-84953-0
Adapter print to DIN 41651, Art. No. 327086
Pitch 1.0 mm, top contact style

1	Motor +
2	V_{CC}
3	GND
4	Motor –
5	Channel $\overline{A}$
6	Channel A
7	Channel $\overline{B}$
8	Channel B
9	N.C.
10	N.C.

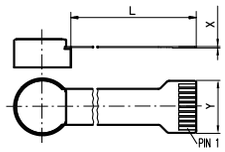

Part Numbers 334910
Pin 1 – 8 / X = 0.3 ±0.03 / Y = 4.5 ±0.07 / L = 84 ±3
Compatible connector:
Molex 52745-0896

1	Motor +
2	V_{CC}
3	GND
4	Motor –
5	Channel $\overline{A}$
6	Channel A
7	Channel $\overline{B}$
8	Channel B

Connection example

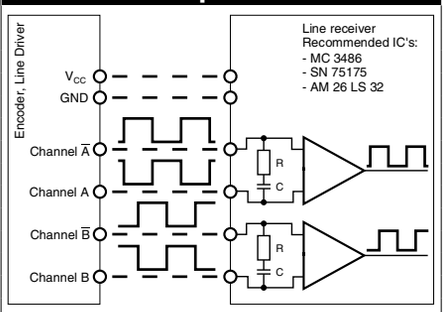

Terminal resistance R = typical 120 Ω
Capacitor C ≥ 0.1 nF per m line length

Encoder MR Type S, 64–256 CPT, 2 Channels

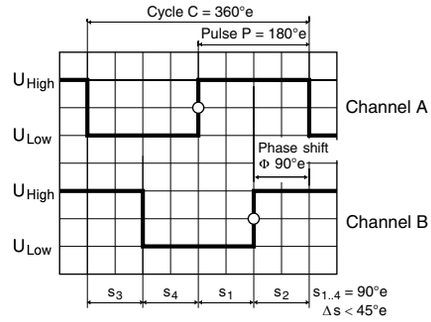

Direction of rotation cw (definition cw p. 78)

Stock program
Standard program
Special program (on request)

Part Numbers	241057	241060	241062
Type			
Counts per turn	64	128	256
Number of channels	2	2	2
Max. operating frequency (kHz)	80	160	320
Max. speed (rpm)	75000	75000	75000

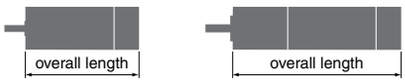

maxon Modular System

+ Motor	Page	+ Gearhead	Page	+ Brake	Page	Overall length [mm] / ● see Gearhead		
RE 13, 0.75 W	88					26.3	26.3	26.3
RE 13, 0.75 W	89					28.7	28.7	28.7
RE 13, 0.75 W	89	GP 13, 0.05 - 0.15 Nm	247			●	●	●
RE 13, 0.75 W	89	GP 13, 0.2 - 0.35 Nm	248			●	●	●
RE 13, 2 W	92					38.5	38.5	38.5
RE 13, 2 W	93					40.9	40.9	40.9
RE 13, 2 W	93	GP 13, 0.05 - 0.15 Nm	247			●	●	●
RE 13, 2 W	93	GP 13, 0.2 - 0.35 Nm	248			●	●	●
RE 13, 1.5 W	96					28.4	28.4	28.4
RE 13, 1.5 W	97					30.8	30.8	30.8
RE 13, 1.5 W	97	GP 13, 0.05 - 0.15 Nm	247			●	●	●
RE 13, 1.5 W	97	GP 13, 0.2 - 0.35 Nm	248			●	●	●
RE 13, 3 W	100					40.6	40.6	40.6
RE 13, 3 W	101					43.0	43.0	43.0
RE 13, 3 W	101	GP 13, 0.05 - 0.15 Nm	247			●	●	●
RE 13, 3 W	101	GP 13, 0.2 - 0.35 Nm	248			●	●	●
RE-max 13, 0.75 W	148					25.2	25.2	25.2
RE-max 13, 0.75 W	148	GP 13, 0.05 - 0.15 Nm	247			●	●	●
RE-max 13, 0.75 W	148	GP 13, 0.2 - 0.35 Nm	248			●	●	●
RE-max 13, 2 W	150					36.2	36.2	36.2
RE-max 13, 2 W	150	GP 13, 0.05 - 0.15 Nm	247			●	●	●
RE-max 13, 2 W	150	GP 13, 0.2 - 0.35 Nm	248			●	●	●

Technical Data

Supply voltage V_{CC}	5 V ± 5%
Output signal	TTL compatible
Phase shift Φ	90°e ± 45°e
Operating temperature range	-25…+85 °C
Moment of inertia of code wheel	≤ 0.005 gcm²
Output current per channel	max. 5 mA

Pin Allocation

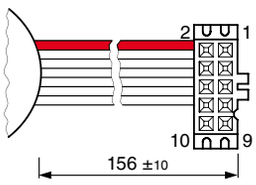

1 Motor +
2 V_{CC}
3 Channel A
4 Channel B
5 GND
6 Motor –
7 N.C.

DIN Connector 41651/
EN 60603-13
flat band cable AWG 28

Connection example

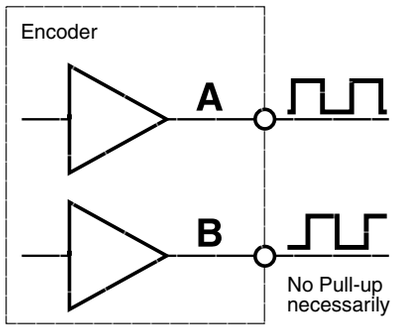

Encoder MR Type M, 32 CPT, 2/3 Channels

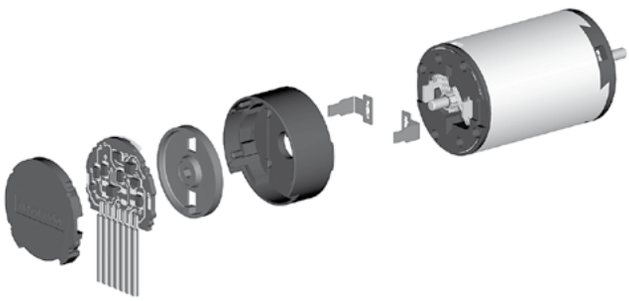

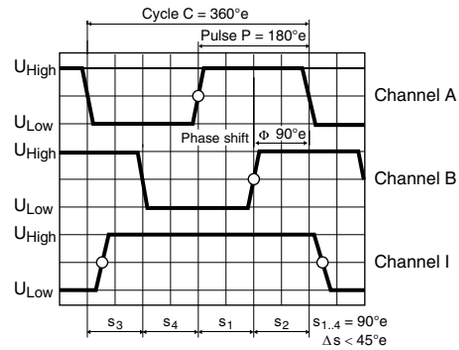

Direction of rotation cw (definition cw p. 78)

Stock program
Standard program
Special program (on request)

Part Numbers	201935	201938
Type		
Counts per turn	32	32
Number of channels	2	3
Max. operating frequency (kHz)	8	8
Max. speed (rpm)	15000	15000

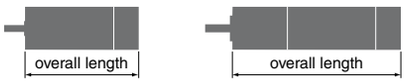

maxon Modular System

+ Motor	Page	+ Gearhead	Page	+ Brake	Page	Overall length [mm] / ● see Gearhead	
RE 16, 2 W	102					28.0	28.0
RE 16, 2 W	102	GP 16, 0.1 - 0.6 Nm	254/255			●	●
RE 16, 2 W	102	GP 16 S	296/297			●	●
RE 16, 3.2 W	104					45.4	45.4
RE 16, 3.2 W	104	GP 16, 0.1 - 0.6 Nm	254/255			●	●
RE 16, 3.2 W	104	GP 16 S	296/297			●	●
RE 16, 4.5 W	106					48.4	48.4
RE 16, 4.5 W	106	GP 16, 0.1 - 0.6 Nm	254/255			●	●
RE 16, 4.5 W	106	GP 16 S	296/297			●	●
A-max 16	122/124					30.4	30.4
A-max 16	122/124	GS 16, 0.01 - 0.1 Nm	250-253			●	●
A-max 16	122/124	GP 16, 0.1 - 0.3 Nm	254			●	●
A-max 16	122/124	GP 16 S	296/297			●	●
A-max 19, 1.5 W	126					34.0	34.0
A-max 19, 1.5 W	126	GP 19, 0.1 - 0.3 Nm	257			●	●
A-max 19, 1.5 W	126	GP 22, 0.5 - 2.0 Nm	264			●	●
A-max 19, 1.5 W	126	GS 24, 0.1 Nm	269			●	●
A-max 19, 1.5 W	126	GP 22 S	299/300			●	●
A-max 19, 2.5 W	128					35.8	35.8
A-max 19, 2.5 W	128	GP 19, 0.1 - 0.3 Nm	257			●	●
A-max 19, 2.5 W	128	GS 20, 0.06 - 0.25 Nm	259			●	●
A-max 19, 2.5 W	128	GP 22, 0.5 - 2.0 Nm	264			●	●
A-max 19, 2.5 W	128	GS 24, 0.1 Nm	269			●	●
A-max 19, 2.5 W	128	GP 22 S	299/300			●	●
A-max 22	130/132					36.9	36.9
A-max 22	130/132	GP 22, 0.1 - 0.6 Nm	260/261			●	●
A-max 22	130/132	GP 22, 0.5 - 2.0 Nm	260-264			●	●
A-max 22	130/132	GS 24, 0.1 Nm	269			●	●
A-max 22	130/132	GP 22 S	299/300			●	●

Technical Data

Supply voltage V_{CC}	2.7 – 5.5 V
Output signal V_{CC} = 5 VDC	TTL compatible
Phase shift Φ	90°e ± 45°e
Operating temperature range	-25…+85 °C
Moment of inertia of code wheel	≤ 0.09 gcm²
Output current per channel	max. 5 mA

The index signal I is not synchronized with channel A or B.
The length of the index signal can last more than one cycle.

Pin Allocation

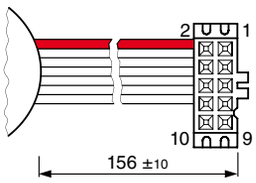

1 Motor +
2 V_{CC}
3 Channel A
4 Channel B
5 GND
6 Motor –
7* Channel I (Index)

DIN Connector 41651/
EN 60603-13
flat band cable AWG 28
*version with 3 channels

Connection example

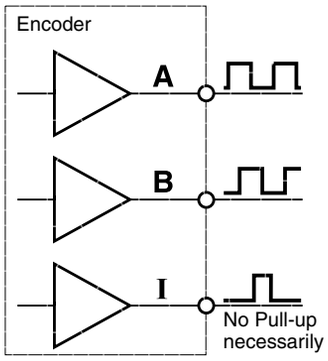

Encoder MR Type M, 32 CPT, 2/3 Channels

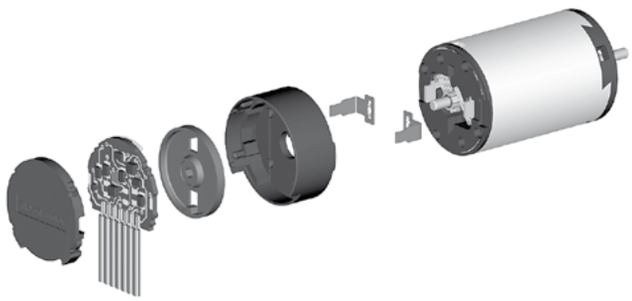

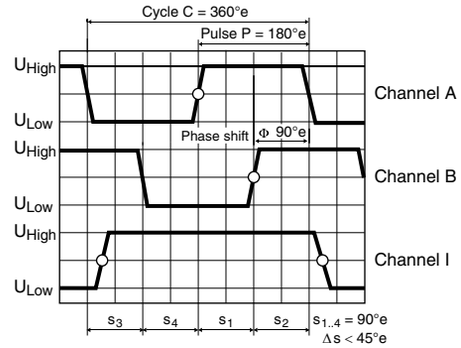

Direction of rotation cw (definition cw p. 78)

Stock program
Standard program
Special program (on request)

Part Numbers	201935	201938
Type		
Counts per turn	32	32
Number of channels	2	3
Max. operating frequency (kHz)	8	8
Max. speed (rpm)	15 000	15 000

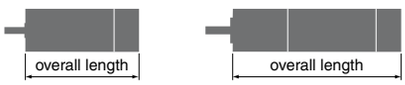

maxon Modular System

+ Motor	Page	+ Gearhead	Page	+ Brake	Page	Overall length [mm] / ● see Gearhead	
RE-max 17	152/154					30.4	30.4
RE-max 17	152/154	GP 16, 0.1 - 0.3 Nm	256			●	●
RE-max 21, 3.5 W	156					34.0	34.0
RE-max 21, 3.5 W	156	GP 22, 0.5 - 2.0 Nm	262/264			●	●
RE-max 21, 3.5 W	156	GS 38, 0.1 - 0.6 Nm	282			●	●
RE-max 21, 3.5 W	156	GP 22 S	299/300			●	●
RE-max 21, 6 W	158					35.8	35.8
RE-max 21, 6 W	158	GP 22, 0.5 - 2.0 Nm	262/264			●	●
RE-max 21, 6 W	158	GS 38, 0.1 - 0.6 Nm	282			●	●
RE-max 21, 6 W	158	GP 22 S	299/300			●	●
RE-max 24	160/162					36.9	36.9
RE-max 24	160/162	GP 22, 0.5 - 2.0 Nm	264			●	●
RE-max 24	160/162	GS 38, 0.1 - 0.6 Nm	282			●	●
RE-max 24	160/162	GP 22 S	299/300			●	●

Technical Data

Supply voltage V_{CC}	2.7 – 5.5 V
Output signal V_{CC} = 5 VDC	TTL compatible
Phase shift Φ	90°e ± 45°e
Operating temperature range	-25…+85 °C
Moment of inertia of code wheel	≤ 0.09 gcm²
Output current per channel	max. 5 mA

The index signal I is not synchronized with channel A or B.
The length of the index signal can last more than one cycle.

Pin Allocation

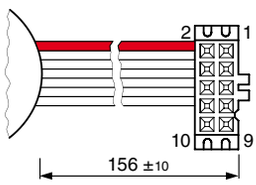

1 Motor +
2 V_{CC}
3 Channel A
4 Channel B
5 GND
6 Motor –
7* Channel I (Index)

DIN Connector 41651/
EN 60603-13
flat band cable AWG 28
*version with 3 channels

Connection example

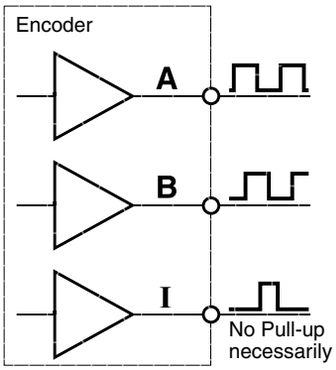

Encoder MR Type M, 128–512 CPT, 2/3 Channels, with Line Driver

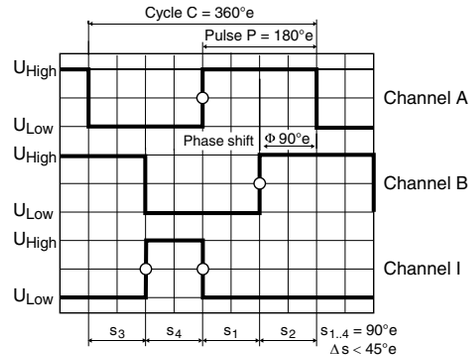

Direction of rotation cw (definition cw p. 78)

Stock program
Standard program
Special program (on request)

Type	Part Numbers 228179	228177	228181	228182	201937	201940
Counts per turn	128	128	256	256	512	512
Number of channels	2	3	2	3	2	3
Max. operating frequency (kHz)	80	80	160	160	320	320
Max. speed (rpm)	37 500	37 500	37 500	37 500	37 500	37 500

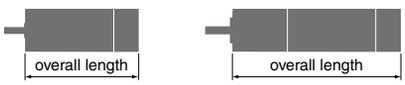

maxon Modular System

+ Motor	Page	+ Gearhead	Page	+ Brake	Page	Overall length [mm] / ● see Gearhead					
RE 16, 2 W	102					28.0	28.0	28.0	28.0	28.0	28.0
RE 16, 2 W	102	GP 16, 0.1 - 0.6 Nm	254/255			●	●	●	●	●	●
RE 16, 2 W	102	GP 16 S	296/297			●	●	●	●	●	●
RE 16, 3.2 W	104					45.4	45.4	45.4	45.4	45.4	45.4
RE 16, 3.2 W	104	GP 16, 0.1 - 0.6 Nm	254/255			●	●	●	●	●	●
RE 16, 3.2 W	104	GP 16 S	296/297			●	●	●	●	●	●
RE 16, 4.5 W	106					48.4	48.4	48.4	48.4	48.4	48.4
RE 16, 4.5 W	106	GP 16, 0.1 - 0.6 Nm	254/255			●	●	●	●	●	●
RE 16, 4.5 W	106	GP 16 S	296/297			●	●	●	●	●	●
A-max 16	122/124					30.4	30.4	30.4	30.4	30.4	30.4
A-max 16	122/124	GS 16, 0.01 - 0.1 Nm	250-253			●	●	●	●	●	●
A-max 16	122/124	GP 16, 0.1 - 0.6 Nm	254/255			●	●	●	●	●	●
A-max 16	122/124	GP 16 S	296/297			●	●	●	●	●	●
A-max 19, 1.5 W	126					34.0	34.0	34.0	34.0	34.0	34.0
A-max 19, 1.5 W	126	GP 19, 0.1 - 0.3 Nm	257			●	●	●	●	●	●
A-max 19, 1.5 W	126	GP 22, 0.5 - 2.0 Nm	262/264			●	●	●	●	●	●
A-max 19, 1.5 W	126	GS 24, 0.1 Nm	269			●	●	●	●	●	●
A-max 19, 1.5 W	126	GP 22 S	299/300			●	●	●	●	●	●
A-max 19, 2.5 W	128					35.8	35.8	35.8	35.8	35.8	35.8
A-max 19, 2.5 W	128	GP 19, 0.1 - 0.3 Nm	257			●	●	●	●	●	●
A-max 19, 2.5 W	128	GS 20 0.06 - 0.25 Nm	259			●	●	●	●	●	●
A-max 19, 2.5 W	128	GP 22, 0.5 - 2.0 Nm	262/264			●	●	●	●	●	●
A-max 19, 2.5 W	128	GS 24, 0.1 Nm	269			●	●	●	●	●	●
A-max 19, 2.5 W	128	GP 22 S	299/300			●	●	●	●	●	●
A-max 22	130/132					36.9	36.9	36.9	36.9	36.9	36.9
A-max 22	130/132	GP 22, 0.1 - 0.6 Nm	260/261			●	●	●	●	●	●
A-max 22	130/132	GP 22, 0.5 - 2.0 Nm	262/264			●	●	●	●	●	●
A-max 22	130/132	GS 24, 0.1 Nm	269			●	●	●	●	●	●
A-max 22	130/132	GP 22 S	299/300			●	●	●	●	●	●
RE-max 17	152/154					30.4	30.4	30.4	30.4	30.4	30.4
RE-max 17	152/154	GP 16, 0.1 - 0.3 Nm	254			●	●	●	●	●	●

Technical Data

Supply voltage V_{CC}	5 V ± 5%
Output signal	TTL compatible
Phase shift Φ	90°e ± 45°e
Index pulse width	90°e ± 45°e
Operating temperature range	-25…+85 °C
Moment of inertia of code wheel	≤ 0.09 gcm²
Output current per channel	max. 5 mA

The index signal I is synchronized with channel A or B.

Pin Allocation

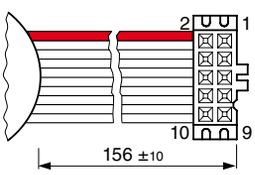

1 Motor +
2 V_{CC}
3 GND
4 Motor –
5 Channel $\overline{A}$
6 Channel A
7 Channel $\overline{B}$
8 Channel B
9* Channel $\overline{I}$ (Index)
10* Channel I (Index)

DIN Connector 41651/
EN 60603-13
flat band cable AWG 28
*version with 3 channels

Connection example

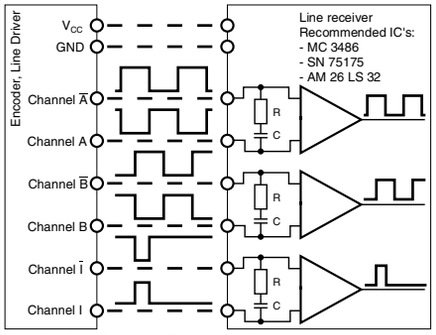

Terminal resistance R = typical 120 Ω
Capacitor C ≥ 0.1 nF per m line length

Encoder MR Type M, 128–512 CPT, 2/3 Channels, with Line Driver

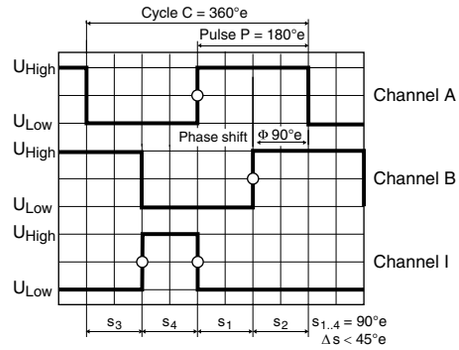

Direction of rotation cw (definition cw p. 78)

Stock program
Standard program
Special program (on request)

Type	Part Numbers 228179	228177	228181	228182	201937	201940
Counts per turn	128	128	256	256	512	512
Number of channels	2	3	2	3	2	3
Max. operating frequency (kHz)	80	80	160	160	320	320
Max. speed (rpm)	37 500	37 500	37 500	37 500	37 500	37 500

maxon Modular System

+ Motor	Page	+ Gearhead	Page	+ Brake	Page	Overall length [mm] / ● see Gearhead					
RE-max 21, 3.5 W	156					34.0	34.0	34.0	34.0	34.0	34.0
RE-max 21, 3.5 W	156	GP 22, 0.5 - 2.0 Nm	262/264			●	●	●	●	●	●
RE-max 21, 3.5 W	156	GS 38, 0.1 - 0.6 Nm	282			●	●	●	●	●	●
RE-max 21, 3.5 W	156	GP 22 S	299/300			●	●	●	●	●	●
RE-max 21, 6 W	158					35.8	35.8	35.8	35.8	35.8	35.8
RE-max 21, 6 W	158	GP 22, 0.5 - 2.0 Nm	262/264			●	●	●	●	●	●
RE-max 21, 6 W	158	GS 38, 0.1 - 0.6 Nm	282			●	●	●	●	●	●
RE-max 21, 6 W	158	GP 22 S	299/300			●	●	●	●	●	●
RE-max 24	160/162					36.9	36.9	36.9	36.9	36.9	36.9
RE-max 24	160/162	GP 22/GS 38	264/282			●	●	●	●	●	●
RE-max 24	160/162	GP 22 S	299/300			●	●	●	●	●	●
EC 16, 30 W	178					50.7	50.7	50.7	50.7	50.7	50.7
EC 16, 30 W	178	GP 16, 0.1 - 0.6 Nm	254/255			●	●	●	●	●	●
EC 16, 30 W	178	GP 22, 0.5 - 1.0 Nm	262			●	●	●	●	●	●
EC 16, 30 W	178	GP 16 S	296/297			●	●	●	●	●	●
EC 16, 60 W	180					66.7	66.7	66.7	66.7	66.7	66.7
EC 16, 60 W	180	GP 16, 0.2 - 0.6 Nm	255			●	●	●	●	●	●
EC 16, 60 W	180	GP 22, 0.5 - 2.0 Nm	262/265			●	●	●	●	●	●
EC 16, 60 W	180	GP 16 S/GP 22 S	296/300			●	●	●	●	●	●
EC 22, 40 W	185					50.5	50.5	50.5	50.5	50.5	50.5
EC 22, 40 W	185	GP 22, 0.5 - 3.4 Nm	265/266			●	●	●	●	●	●
EC 22, 40 W	185	GP 22 S	299/300			●	●	●	●	●	●
EC 22, 100 W	187					68.7	68.7	68.7	68.7	68.7	68.7
EC 22, 100 W	187	GP 22, 0.5 - 3.4 Nm	265/266			●	●	●	●	●	●
EC 22, 100 W	187	GP 22 S	299/300			●	●	●	●	●	●
EC-max 16, 5 W	199					31.3	31.3	31.3	31.3	31.3	31.3
EC-max 16, 5 W	199	GP 16, 0.1 - 0.6 Nm	254/255			●	●	●	●	●	●
EC-max 16, 5 W	199	GP 16 S	296/297			●	●	●	●	●	●
EC-max 16, 8 W	201					43.3	43.3	43.3	43.3	43.3	43.3
EC-max 16, 8 W	201	GP 16, 0.2 - 0.6 Nm	255			●	●	●	●	●	●
EC-max 16, 8 W	201	GP 22, 0.5 - 2.0 Nm	265			●	●	●	●	●	●
EC-max 16, 8 W	201	GP 16 S/GP 22 S	296/300			●	●	●	●	●	●
EC-max 22, 12 W	202					41.7	41.7	41.7	41.7	41.7	41.7
EC-max 22, 12 W	202	GP 22, 0.5 - 2.0 Nm	265/266			●	●	●	●	●	●
EC-max 22, 12 W	202	KD 32, 1.0 - 4.5 Nm	281			●	●	●	●	●	●
EC-max 22, 12 W	202	GP 22 S	299/300			●	●	●	●	●	●
EC-max 22, 25 W	203					58.2	58.2	58.2	58.2	58.2	58.2
EC-max 22, 25 W	203	GP 22/GP 32	266/277			●	●	●	●	●	●
EC-max 22, 25 W	203	GP 32 S	301-303			●	●	●	●	●	●

Technical Data

Supply voltage V_{CC}	5 V ± 5%
Output signal	TTL compatible
Phase shift Φ	90°e ± 45°e
Index pulse width	90°e ± 45°e
Operating temperature range	-25…+85 °C
Moment of inertia of code wheel	≤ 0.09 gcm²
Output current per channel	max. 5 mA

The index signal I is synchronized with channel A or B.

Pin Allocation

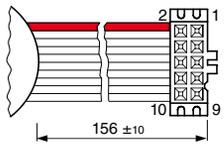

MR Encoder EC-max 16 / EC-max 22

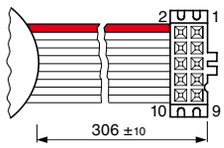

MR Encoder EC 16 / EC 22

1 N.C.
2 V_{CC}
3 GND
4 N.C.
5 Channel $\overline{A}$
6 Channel A
7 Channel $\overline{B}$
8 Channel B
9* Channel $\overline{I}$ (Index)
10* Channel I (Index)

DIN Connector 41651/
EN 60603-13
flat band cable AWG 28
*version with 3 channels

Pin assignment for RE-max
see Page 317

Connection example

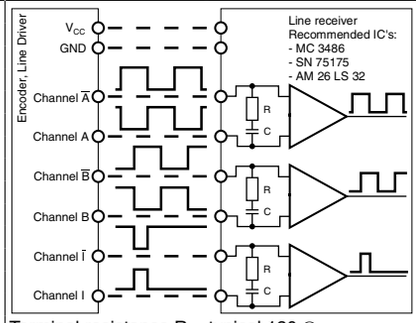

Terminal resistance R = typical 120 Ω
Capacitor C ≥ 0.1 nF per m line length

Encoder MR Type ML, 128–1000 CPT, 3 Channels, with Line Driver

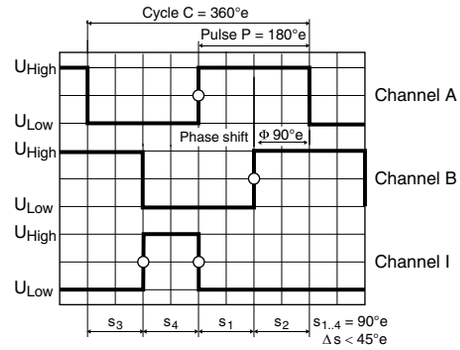

Direction of rotation cw (definition cw p. 78)

Stock program
Standard program
Special program (on request)

Type	Part Numbers 225771	225773	225778	225805	225780
Counts per turn	128	256	500	512	1000
Number of channels	3	3	3	3	3
Max. operating frequency (kHz)	80	160	200	320	200
Max. speed (rpm)	37500	37500	24000	37500	12000

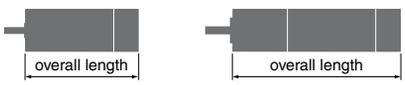

maxon Modular System

+ Motor	Page	+ Gearhead	Page	+ Brake	Page	Overall length [mm] / ● see Gearhead				
RE 25	107/109					65.5	65.5	65.5	65.5	65.5
RE 25	107/109	GP 26, 0.75 - 2.0 Nm	270			●	●	●	●	●
RE 25	107/109	GP 32, 0.75 - 6.0 Nm	272-277			●	●	●	●	●
RE 25	107/109	KD 32, 1.0 - 4.5 Nm	281			●	●	●	●	●
RE 25	107/109	GP 32 S	301-303			●	●	●	●	●
RE 25, 20 W	108					54.0	54.0	54.0	54.0	54.0
RE 25, 20 W	108	GP 22, 0.5 Nm	262			●	●	●	●	●
RE 25, 20 W	108	GP 26, 0.75 - 2.0 Nm	270			●	●	●	●	●
RE 25, 20 W	108	GP 32, 0.75 - 6.0 Nm	272-277			●	●	●	●	●
RE 25, 20 W	108	KD 32, 1.0 - 4.5 Nm	281			●	●	●	●	●
RE 25, 20 W	108	GP 32 S	301-303			●	●	●	●	●
A-max 26	134-140					53.5	53.5	53.5	53.5	53.5
A-max 26	134-140	GP 26, 0.75 - 4.5 Nm	270			●	●	●	●	●
A-max 26	134-140	GS 30, 0.07 - 0.2 Nm	271			●	●	●	●	●
A-max 26	134-140	GP 32, 0.75 - 6.0 Nm	272-277			●	●	●	●	●
A-max 26	134-140	GS 38, 0.1 - 0.6 Nm	282			●	●	●	●	●
A-max 26	134-140	GP 32 S	301-303			●	●	●	●	●
RE-max 29	163-166					53.5	53.5	53.5	53.5	53.5
RE-max 29	163-166	GP 32, 0.75 - 6.0 Nm	273-277			●	●	●	●	●
RE-max 29	163-166	GP 32 S	301-303			●	●	●	●	●
EC-max 30, 40 W	204							54.2		54.2
EC-max 30, 40 W	204	GP 32, 1 - 8.0 Nm	277/279					●		●
EC-max 30, 40 W	204	KD 32, 1.0 - 4.5 Nm	281					●		●
EC-max 30, 40 W	204	GP 32 S	301-303					●		●
EC-max 30, 60 W	205							76.2		76.2
EC-max 30, 60 W	205	GP 32, 1 - 8.0 Nm	277/279					●		●
EC-max 30, 60 W	205	KD 32, 1.0 - 4.5 Nm	281					●		●
EC-max 30, 60 W	205	GP 42, 3 - 15 Nm	284					●		●
EC-4pole 30	213							59.2		59.2
EC-4pole 30	213	GP 32, 4.0 - 8.0 Nm	279					●		●
EC-4pole 30	213	GP 42, 3 - 15 Nm	284					●		●
EC-4pole 30	214							76.2		76.2
EC-4pole 30	214	GP 32, 4.0 - 8.0 Nm	279					●		●
EC-4pole 30	214	GP 42, 3 - 15 Nm	284					●		●

Technical Data

Supply voltage V_{CC}	5 V ± 5%
Output signal	TTL compatible
Phase shift Φ	90°e ± 45°e
Index pulse width	90°e ± 45°e
Operating temperature range	-25…+85 °C
Moment of inertia of code wheel	≤ 0.7 gcm²
Output current per channel	max. 5 mA

The index signal I is synchronized with channel A or B.

Pin Allocation

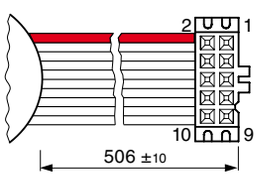

1 N.C.
2 V_{CC}
3 GND
4 N.C.
5 Channel $\overline{A}$
6 Channel A
7 Channel $\overline{B}$
8 Channel B
9 Channel $\overline{I}$ (Index)
10 Channel I (Index)

DIN Connector 41651/
EN 60603-13
flat band cable AWG 28

Connection example

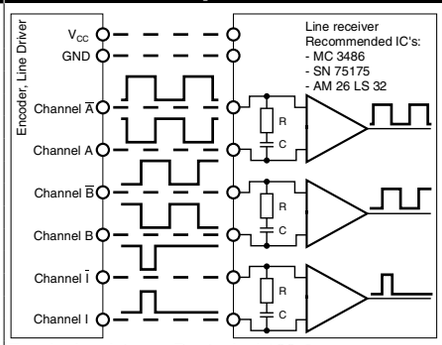

Terminal resistance R = typical 120 Ω
Capacitor C ≥ 0.1 nF per m line length

Encoder MR Type L, 256–1024 CPT, 3 Channels, with Line Driver

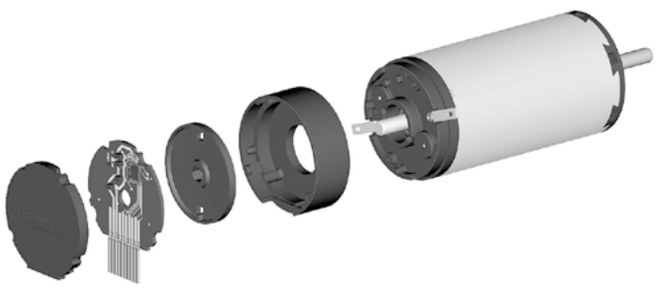

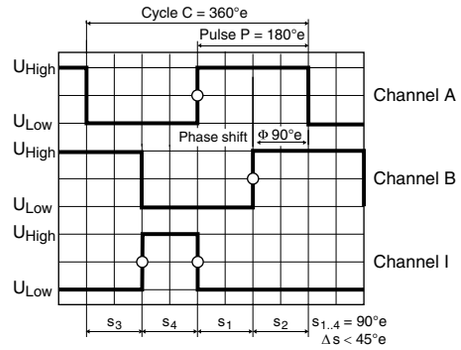

Direction of rotation cw (definition cw p. 78)

Stock program
Standard program
Special program (on request)

Type	Part Numbers 225783	228452	225785	228456	225787
Counts per turn	256	500	512	1000	1024
Number of channels	3	3	3	3	3
Max. operating frequency (kHz)	80	200	160	200	320
Max. speed (rpm)	18750	24000	18750	12000	18750

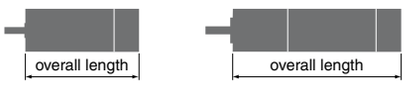

maxon Modular System

+ Motor	Page	+ Gearhead	Page	+ Brake	Page	Overall length [mm] / ● see Gearhead				
RE 30, 15 W	110					79.4	79.4	79.4	79.4	79.4
RE 30, 15 W	110	GP 32, 0.75 - 4.5 Nm	274			●	●	●	●	●
RE 30, 60 W	111					79.4	79.4	79.4	79.4	79.4
RE 30, 60 W	111	GP 32, 0.75 - 4.5 Nm	272			●	●	●	●	●
RE 30, 60 W	111	GP 32, 0.75 - 6.0 Nm	274-278			●	●	●	●	●
RE 30, 60 W	111	GP 32 S	301-303			●	●	●	●	●
RE 35, 90 W	112					82.4	82.4	82.4	82.4	82.4
RE 35, 90 W	112	GP 32, 0.75 - 4.5 Nm	272			●	●	●	●	●
RE 35, 90 W	112	GP 32, 0.75 - 6.0 Nm	274-278			●	●	●	●	●
RE 35, 90 W	112	GP 32, 4.0 - 8.0 Nm	279			●	●	●	●	●
RE 35, 90 W	112	GP 42, 3 - 15 Nm	283			●	●	●	●	●
RE 35, 90 W	112	GP 32 S	301-303			●	●	●	●	●
RE 40, 150 W	114					82.4	82.4	82.4	82.4	82.4
RE 40, 150 W	114	GP 42, 3 - 15 Nm	283			●	●	●	●	●
RE 40, 150 W	114	GP 52, 4 - 30 Nm	287			●	●	●	●	●
A-max 32	142/144					72.7	72.7	72.7	72.7	72.7
A-max 32	142/144	GP 32, 0.75 - 6.0 Nm	274-277			●	●	●	●	●
A-max 32	142/144	GS 38, 0.1 - 0.6 Nm	282			●	●	●	●	●
A-max 32	142/144	GP 32 S	301-303			●	●	●	●	●
EC-max 40, 70 W	206					73.9	73.9	73.9	73.9	73.9
EC-max 40, 70 W	206	GP 42, 3 - 15 Nm	284			●	●	●	●	●
EC-max 40, 120 W	207					103.9	103.9	103.9	103.9	103.9
EC-max 40, 120 W	207	GP 52, 4 - 30 Nm	288			●	●	●	●	●
EC-i 40, 50 W	228					41.9	41.9	41.9	41.9	41.9
EC-i 40, 50 W	228	GP 32, 1 - 6 Nm	277			●	●	●	●	●
EC-i 40, 50 W	228	GP 32 S	301-303			●	●	●	●	●
EC-i 40, 70 W	229					51.9	51.9	51.9	51.9	51.9
EC-i 40, 70 W	229	GP 32, 1 - 6 Nm	277			●	●	●	●	●
EC-i 40, 70 W	229	GP 32 S	301-303			●	●	●	●	●

Technical Data

Supply voltage V_{CC}	5 V ± 5%
Output signal	TTL compatible
Phase shift Φ	90°e ± 45°e
Index pulse width	90°e ± 45°e
Operating temperature range	-25…+85 °C
Moment of inertia of code wheel	≤ 1.7 gcm²
Output current per channel	max. 5 mA

The index signal I is synchronized with channel A or B.

Pin Allocation

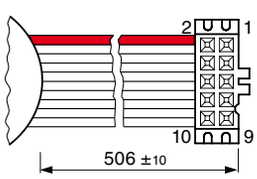

1 N.C.
2 V_{CC}
3 GND
4 N.C.
5 Channel $\overline{A}$
6 Channel A
7 Channel $\overline{B}$
8 Channel B
9 Channel $\overline{I}$ (Index)
10 Channel I (Index)

DIN Connector 41651/
EN 60603-13
flat band cable AWG 28

Connection example

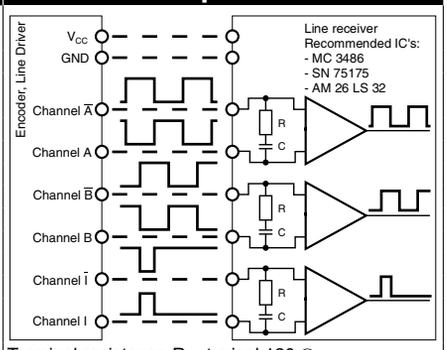

Terminal resistance R = typical 120 Ω
Capacitor C ≥ 0.1 nF per m line length

Encoder 8 OPT 50 CPT, 2 Channels

NEW

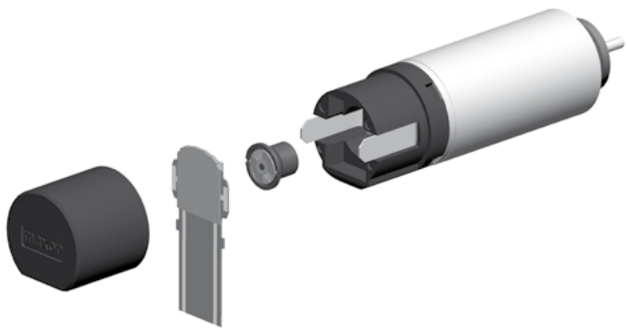

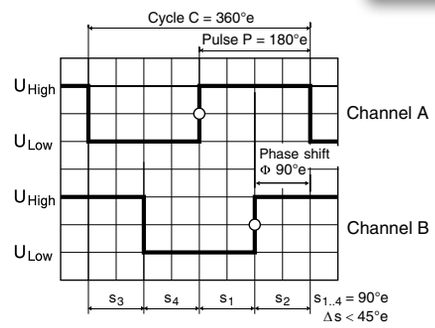

Direction of rotation cw (definition cw p. 78)

Stock program
Standard program
Special program (on request)

Part Numbers	
	473594
Type (provisonal)	
Counts per turn	50
Number of channels	2
Max. operating frequency (kHz)	15
Max. speed (rpm)	18000

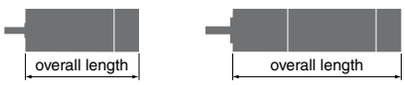

maxon Modular System

+ Motor	Page	+ Gearhead	Page	+ Brake	Page	Overall length [mm] / ● see Gearhead
RE 8, 0.5 W, A	81					24.2
RE 8, 0.5 W, A	81	GP 8, 0.01 - 0.1 Nm	243			●
RE 8, 0.5 W, A	81	GP 8 S	294–295			●

Technical Data

Supply voltage V_{CC} [1]	3 V ± 10%
Phase shift Φ	90°e ± 45°e
Operating temperature range	-20…+85 °C
Moment of inertia of code wheel	≤ 0.001 gcm²
Output current per channel	min. -1 mA, max. 8 mA

[1] Not in combination with maxon controllers.

Pin Allocation

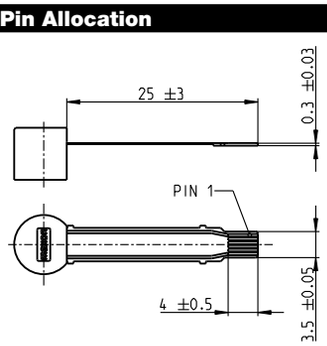

1 Motor +
2 V_{CC}
3 Channel A
4 Channel B
5 GND
6 Motor –

Compatible connector:
Molex 52745-0697

Connection example

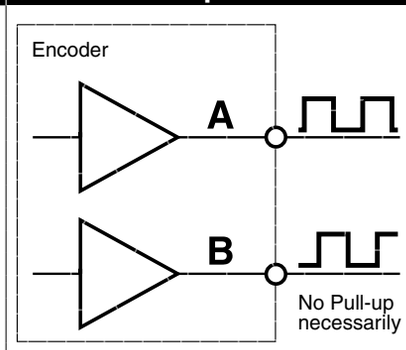

Encoder SCH16F 2000–3600 CPT, 3 Channels, with Line Driver RS 422 NEW

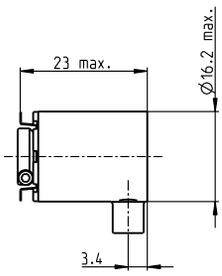

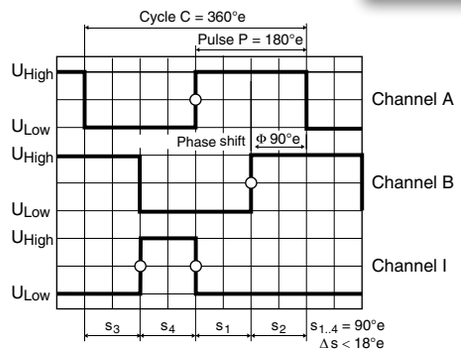

Direction of rotation cw (definition cw p. 78)

Stock program
Standard program
Special program (on request)

Part Numbers

Type (provisonal)	461212	461211	X drives
Counts per turn	2000	3600	2000–3600
Number of channels	3	3	3
Max. operating frequency (kHz)	200	200	200
Max. speed (rpm)	6000	3333	6000–3333
Shaft diameter (mm)	3	3	2

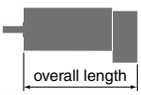

maxon Modular System

+ Motor	Page	+ Gearhead	Page	+ Brake	Page	Overall length [mm] / ● see Gearhead		
DCX 22 S	61							online
DCX 22 L	62							online
EC-4pole 22, 90 W	211					76.1	76.1	
EC-4pole 22, 120 W	212					93.5	93.5	

Technical Data

Supply voltage V_{CC}	4.5 - 30 V
Output signal	EIA Standard RS 422
Operating temperature range	-20…+70 °C
Moment of inertia of code wheel	0.25 gcm²
Output current per channel	+/- 20 mA
Phase shift Φ	90°e ± 18°e
Index pulse width	90°e ± 18°e
Max. startup torque at 25 °C	< 5 mNm

The index signal I is synchronized with channel A or B.

Pin Allocation

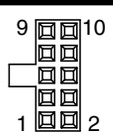

1	N.C.	DIN Connector 41651/EN 60603-13
2	V_{CC}	
3	GND	
4	N.C.	Ring terminal Molex 19324-0002
5	Channel $\overline{A}$	
6	Channel A	
7	Channel $\overline{B}$	
8	Channel B	
9	Channel $\overline{I}$ (Index)	
10	Channel I (Index)	

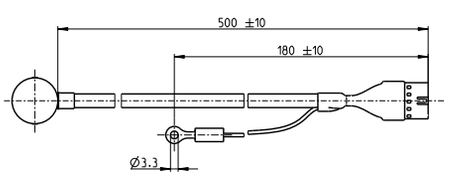

Connection example

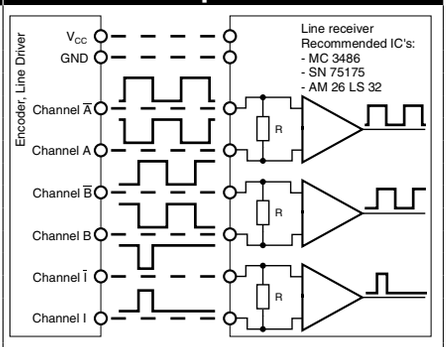

Opt. terminal resistance R = typical 120 Ω

Encoder 2RMHF 3000–5000 CPT, 3 Channels, with Line Driver RS 422

NEW

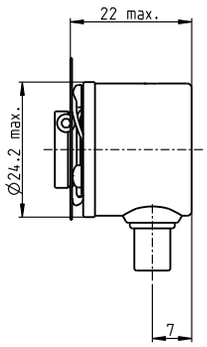

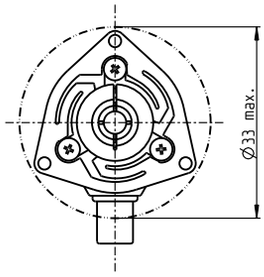

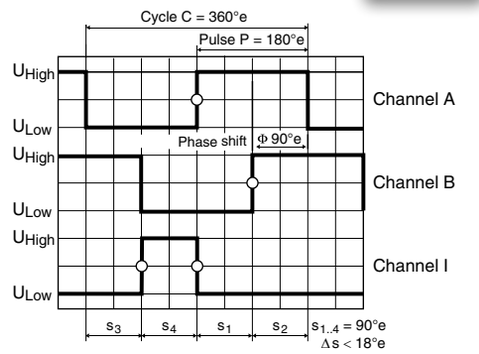

Direction of rotation cw (definition cw p. 78)

Stock program
Standard program
Special program (on request)

Part Numbers	461214	461216	461213	461215	X drives
Type (provisonal)					
Counts per turn	3000	3000	5000	5000	3000–5000
Number of channels	3	3	3	3	3
Max. operating frequency (kHz)	200	200	200	200	200
Max. speed (rpm)	4000	4000	2400	2400	4000–2400
Shaft diameter (mm)	4	6	4	6	4

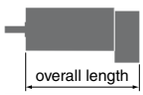

maxon Modular System

+ Motor	Page	+ Gearhead	Page	+ Brake	Page	Overall length [mm] / ● see Gearhead				
DCX 32 L	63									online
DCX 35 L	64									online
EC-4pole 30, 100 W	213					75.2		75.2		
EC-4pole 30, 200 W	214					92.2		92.2		
EC-i 40, 50 W	228						56.2		56.2	
EC-i 40, 70 W	229						66.2		66.2	

Technical Data

Supply voltage V_{CC}	4.5 - 30 V
Output signal	EIA Standard RS 422
driver used:	26C31
Operating temperature range	-40…+85 °C
Moment of inertia of code wheel	1.0 gcm²
Output current per channel	+/- 30 mA
Phase shift Φ	90°e ± 18°e
Index pulse width	90°e ± 18°e
Max. startup torque at 25 °C	< 5 mNm

The index signal I is synchronized with channel A or B.

Pin Allocation

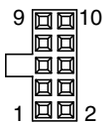

1	N.C.	DIN Connector 41651/EN 60603-13
2	V_{CC}	
3	GND	
4	N.C.	Ring terminal Molex 19324-0002
5	Channel $\overline{A}$	
6	Channel A	
7	Channel $\overline{B}$	
8	Channel B	
9	Channel $\overline{I}$ (Index)	
10	Channel I (Index)	

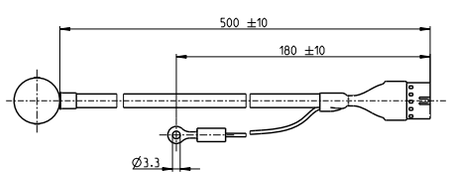

Connection example

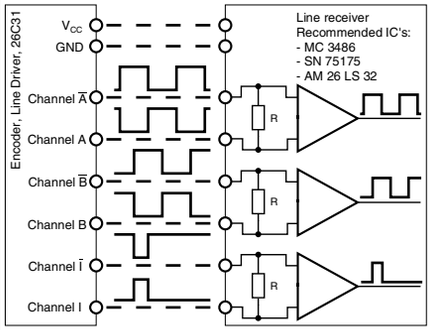

Opt. terminal resistance R = typical 120 Ω

Encoder Enc 22 100 CPT, 2 Channels

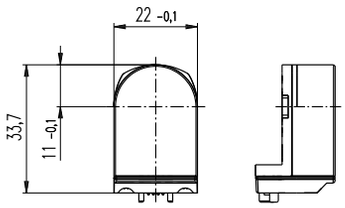

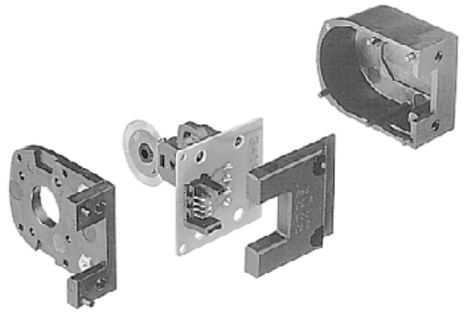

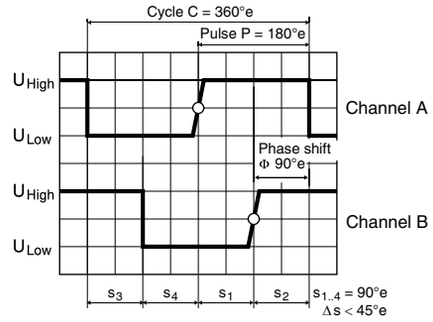

Direction of rotation cw (definition cw p. 78)

Stock program
Standard program
Special program (on request)

Part Numbers	103935	110520	110521
Type			
Counts per turn	100	100	100
Number of channels	2	2	2
Max. operating frequency (kHz)	20	20	20
Max. speed (rpm)	12000	12000	12000
Shaft diameter (mm)	3	2	3

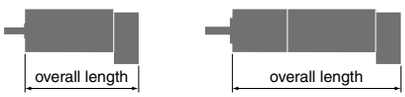

maxon Modular System

+ Motor	Page	+ Gearhead	Page	Overall length [mm] / ● see Gearhead		
RE 25	107/109			68.6		
RE 25	107/109	GP 26, 0.75 - 2.0 Nm	270	●		
RE 25	107/109	GP 32, 0.75 - 4.5 Nm	272	●		
RE 25	107/109	GP 32, 0.75 - 4.5 Nm	273	●		
RE 25	107/109	GP 32, 1.0 - 6.0 Nm	276	●		
RE 25	107/109	GP 32 S	301-303	●		
A-max 19, 1.5 W	126				43.3	
A-max 19, 1.5 W	126	GP 19, 0.1 - 0.3 Nm	257		●	
A-max 19, 1.5 W	126	GS 20, 0.06 - 0.25 Nm	259		●	
A-max 19, 1.5 W	126	GP 22, 0.1 - 2.0 Nm	262/264		●	
A-max 19, 1.5 W	126	GS 24, 0.1 Nm	269		●	
A-max 19, 1.5 W	126	GP 22 S	299/300		●	
A-max 19, 2.5 W	128				45.9	
A-max 19, 2.5 W	128	GP 19, 0.1 - 0.3 Nm	257		●	
A-max 19, 2.5 W	128	GP 22, 0.1 - 2.0 Nm	262/264		●	
A-max 19, 2.5 W	128	GS 24, 0.1 Nm	269		●	
A-max 19, 2.5 W	128	GP 22 S	299/300		●	
A-max 22	130/132				46.3	
A-max 22	130/132	GP 22, 0.1 - 0.3 Nm	260		●	
A-max 22	130/132	GP 22, 0.2 - 0.6 Nm	261		●	
A-max 22	130/132	GP 22, 0.1 - 2.0 Nm	260-264		●	
A-max 22	130/132	GS 24, 0.1 Nm	269		●	
A-max 22	130/132	GP 22 S	299/300		●	
A-max 26	134-140					59.1
A-max 26	134-140	GP 26, 0.75 - 4.5 Nm	270			●
A-max 26	134-140	GS 30, 0.07 - 0.2 Nm	271			●
A-max 26	134-140	GP 32, 0.75 - 4.5 Nm	272			●
A-max 26	134-140	GP 32, 0.75 - 4.5 Nm	273			●
A-max 26	134-140	GP 32, 1.0 - 6.0 Nm	277			●
A-max 26	134-140	GS 38, 0.1 - 0.6 Nm	282			●
A-max 26	134-140	GP 32 S	301-303			●

Technical Data

Supply voltage V_{CC}	5 V ± 10%
Output signal	TTL compatible
Phase shift Φ	90°e ± 45°e
Signal rise time (typically, at C_L = 25 pF, R_L = 11 kΩ, 25°C)	200 ns
Signal fall time (typically, at C_L = 25 pF, R_L = 11 kΩ, 25°C)	50 ns
Operating temperature range	-20…+85°C
Moment of inertia of code wheel	≤ 0.05 gcm²
Output current per channel	min. -1 mA, max. 5 mA

Pin Allocation

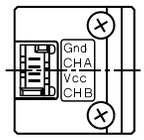

Micromodule contact strip
Type Lumberg MICS 4
Pin 4 GND
Pin 3 Channel A
Pin 2 V_{CC}, Pin 1 Channel B
recommended connectors:
Micromodule connector
Type Lumberg MICA 4

Order number for connector with cable: 3419.506

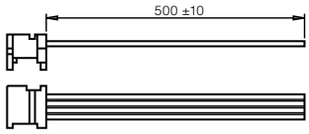

Connection example

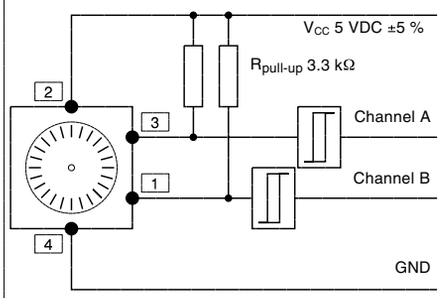

Ambient temperature range ϑ_U = 22 - 25°C

Encoder HEDS 5540 500 CPT, 3 Channels

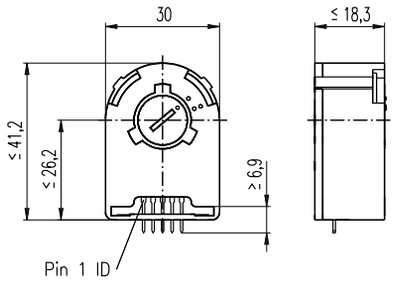

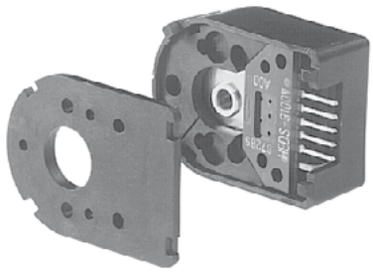

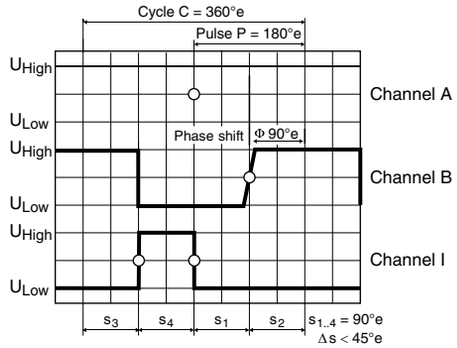

Direction of rotation cw (definition cw p. 78)

Stock program
Standard program
Special program (on request)

Type	Part Numbers 110511	110513	110515
Counts per turn	500	500	500
Number of channels	3	3	3
Max. operating frequency (kHz)	100	100	100
Max. speed (rpm)	12000	12000	12000
Shaft diameter (mm)	3	4	6

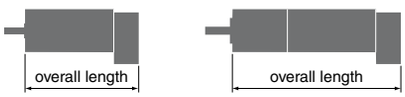

maxon Modular System

+ Motor	Page	+ Gearhead	Page	+ Brake	Page	Overall length [mm] / ● see Gearhead					
RE 25	107/109					75.3					
RE 25	107/109	GP 26, 0.75 - 2.0 Nm	270			●					
RE 25	107/109	GP 32, 0.75 - 6.0 Nm	272-276			●					
RE 25	107/109	KD 32, 1.0 - 4.5 Nm	281			●					
RE 25	107/109	GP 32 S	301-303			●					
RE 25, 20 W	109			AB 28	372	105.8					
RE 25, 20 W	109	GP 26, 0.75 - 2.0 Nm	270	AB 28	372	●					
RE 25, 20 W	109	GP 32, 0.75 - 6.0 Nm	272-276	AB 28	372	●					
RE 25, 20 W	109	KD 32, 1.0 - 4.5 Nm	281	AB 28	372	●					
RE 25, 20 W	109	GP 32 S	301-303	AB 28	372	●					
RE 30, 15 W	110					88.8					
RE 30, 15 W	110	GP 32, 0.75 - 4.5 Nm	274			●					
RE 30, 60 W	111					88.8					
RE 30, 60 W	111	GP 32, 0.75 - 6.0 Nm	272-278			●					
RE 30, 60 W	111	KD 32, 1.0 - 4.5 Nm	281			●					
RE 30, 60 W	111	GP 32 S	301-303			●					
RE 35, 90 W	112						91.7				
RE 35, 90 W	112	GP 32, 0.75 - 8.0 Nm	272-279				●				
RE 35, 90 W	112	GP 42, 3.0 - 15 Nm	283				●				
RE 35, 90 W	112	GP 32 S	301-303				●				
RE 35, 90 W	112			AB 28	372	124.3					
RE 35, 90 W	112	GP 32, 0.75 - 8.0 Nm	272-279	AB 28	372	●					
RE 35, 90 W	112	GP 42, 3.0 - 15 Nm	283	AB 28	372	●					
RE 35, 90 W	112	GP 32 S	301-303	AB 28	372	●					
RE 40, 150 W	114						91.7				
RE 40, 150 W	114	GP 42, 3.0 - 15 Nm	283				●				
RE 40, 150 W	114	GP 52, 4.0 - 30 Nm	287				●				
RE 40, 150 W	114			AB 28	372	124.3					
RE 40, 150 W	114	GP 42, 3.0 - 15 Nm	283	AB 28	372	●					
RE 40, 150 W	114	GP 52, 4.0 - 30 Nm	287	AB 28	372	●					

Technical Data

Supply voltage V_{CC}	5 V ± 10%
Output signal	TTL compatible
Phase shift Φ	90°e ± 45°e
Signal rise time (typically, at C_L = 25 pF, R_L = 2.7 kΩ, 25 °C)	180 ns
Signal fall time (typically, at C_L = 25 pF, R_L = 2.7 kΩ, 25 °C)	40 ns
Index pulse width (nominal)	90°e
Operating temperature range	-40…+100 °C
Moment of inertia of code wheel	≤ 0.6 gcm²
Max. angular acceleration	250000 rad s⁻²
Output current per channel	min. -1 mA, max. 5 mA

The index signal I is synchronized with channel A or B.

Pin Allocation

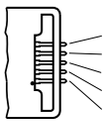

Encoder	Description	Pin no. from 3409.506
Pin 5	Channel B	1
Pin 4	V_{CC}	2
Pin 3	Channel A	3
Pin 2	Channel I	4
Pin 1	GND	5

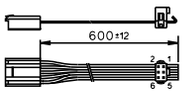

Cable with plug:
maxon part number 3409.506
The plug (Harting 918.906.6803) can be fixed in the required position.

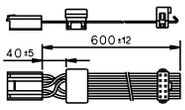

Cable with plug (compatible with encoder HEDS5010):
maxon part number 3409.504
The plug (3M 89110-0101) can be fixed in the required position.

Connection example

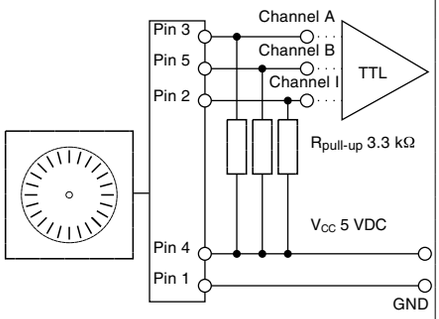

Ambient temperature range ϑ_U = 25 °C

Encoder HEDS 5540 500 CPT, 3 Channels

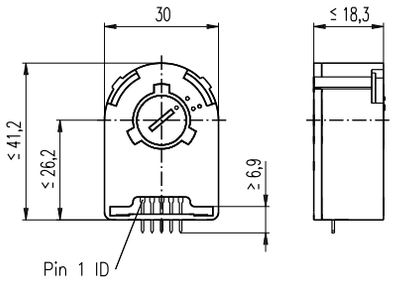

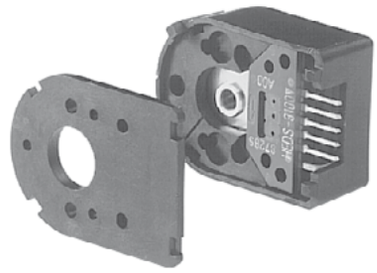

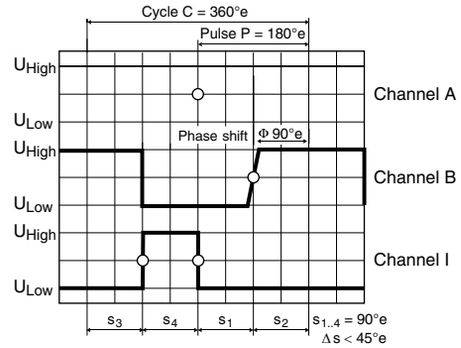

Direction of rotation cw (definition cw p. 78)

Stock program
Standard program
Special program (on request)

Type	Part Numbers 110511	110513	110515	110517
Counts per turn	500	500	500	500
Number of channels	3	3	3	3
Max. operating frequency (kHz)	100	100	100	100
Max. speed (rpm)	12000	12000	12000	12000
Shaft diameter (mm)	3	4	6	8

maxon Modular System

+ Motor	Page	+ Gearhead	Page	+ Brake	Page	Overall length [mm] / ● see Gearhead			
RE 25, 20 W	108					63.8			
RE 25, 20 W	108	GP 26, 0.75 - 2.0 Nm	270			●			
RE 25, 20 W	108	GP 32, 0.75 - 4.5 Nm	272			●			
RE 25, 20 W	108	GP 32, 0.75 - 6.0 Nm	273/276			●			
RE 25, 20 W	108	KD 32, 1.0 - 4.5 Nm	281			●			
RE 25, 20 W	108	GP 32 S	301-303			●			
RE 25, 20 W	108			AB 28	372	94.3			
RE 25, 20 W	108	GP 22, 0.5 Nm	262			●			
RE 25, 20 W	108	GP 26, 0.75 - 2.0 Nm	270	AB 28	372	●			
RE 25, 20 W	108	GP 32, 0.75 - 4.5 Nm	272	AB 28	372	●			
RE 25, 20 W	108	GP 32, 0.75 - 6.0 Nm	273/276	AB 28	372	●			
RE 25, 20 W	108	KD 32, 1.0 - 4.5 Nm	281	AB 28	372	●			
RE 25, 20 W	108	GP 32 S	301-303	AB 28	372	●			
RE 50, 200 W	115								128.7
RE 50, 200 W	115	GP 52, 4 - 30 Nm	288						●
RE 50, 200 W	115	GP 62, 8 - 50 Nm	289						●
RE 65, 250 W	116								157.3
RE 65, 250 W	116	GP 81, 20 - 120 Nm	290						●
A-max 26	134-140					63.1			
A-max 26	134-140	GP 26, 0.75 - 4.5 Nm	270			●			
A-max 26	134-140	GS 30, 0.07 - 0.2 Nm	271			●			
A-max 26	134-140	GP 32, 0.75 - 4.5 Nm	272			●			
A-max 26	134-140	GP 32, 0.75 - 6.0 Nm	273/277			●			
A-max 26	134-140	GS 38, 0.1 - 0.6 Nm	282			●			
A-max 26	134-140	GP 32 S	301-303			●			
A-max 32	142/144						82.3		
A-max 32	142/144	GP 32, 0.75 - 6.0 Nm	272-277				●		
A-max 32	142/144	GS 38, 0.1 - 0.6 Nm	282				●		
A-max 32	142/144	GP 32 S	301-303				●		
EC 32, 80 W	192						78.4		
EC 32, 80 W	192	GP 32, 0.75 - 6.0 Nm	272-278				●		
EC 32, 80 W	192	GP 32 S	301-303				●		
EC 40, 170 W	193							103.4	
EC 40, 170 W	193	GP 42, 3.0 - 15 Nm	283					●	
EC 40, 170 W	193	GP 52, 4.0 - 30 Nm	287					●	

Technical Data

Supply voltage V_{CC}	5 V ± 10%
Output signal	TTL compatible
Phase shift Φ	90°e ± 45°e
Signal rise time (typically, at C_L = 25 pF, R_L = 2.7 kΩ, 25 °C)	180 ns
Signal fall time (typically, at C_L = 25 pF, R_L = 2.7 kΩ, 25 °C)	40 ns
Index pulse width	90°e
Operating temperature range	-40…+100 °C
Moment of inertia of code wheel	≤ 0.6 gcm^2
Max. angular acceleration	250000 rad s^{-2}
Output current per channel	min. -1 mA, max. 5 mA

The index signal I is synchronized with channel A or B.

Pin Allocation

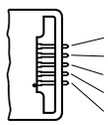

Encoder	Description	Pin no. from 3409.506
Pin 5	Channel B	1
Pin 4	V_{CC}	2
Pin 3	Channel A	3
Pin 2	Channel I	4
Pin 1	GND	5

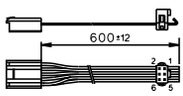

Cable with plug:
maxon part number 3409.506
The plug (Harting 918.906.6803) can be fixed in the required position.

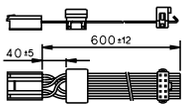

Cable with plug (compatible with encoder HEDS5010):
maxon part number 3409.504
The plug (3M 89110-0101) can be fixed in the required position.

Connection example

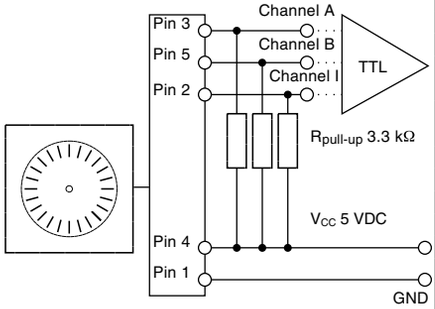

Ambient temperature range ϑ_U = 25 °C

Encoder HEDL 5540 500 CPT, 3 Channels, with Line Driver RS 422

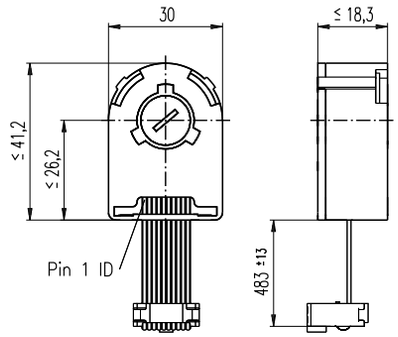

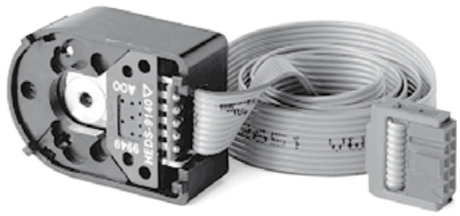

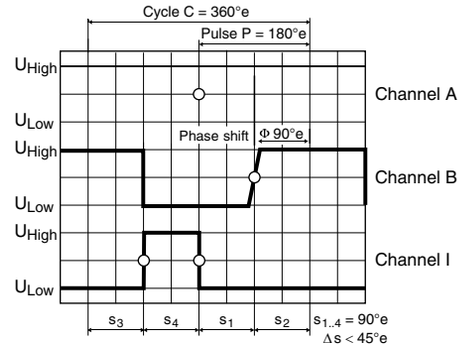

Direction of rotation cw (definition cw p. 78)

Stock program
Standard program
Special program (on request)

Type	Part Numbers 110512	110514	110516
Counts per turn	500	500	500
Number of channels	3	3	3
Max. operating frequency (kHz)	100	100	100
Max. speed (rpm)	12000	12000	12000
Shaft diameter (mm)	3	4	6

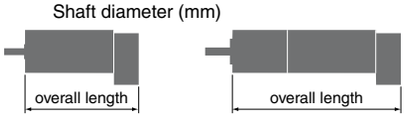

maxon Modular System

+ Motor	Page	+ Gearhead	Page	+ Brake	Page	Overall length [mm] / ● see Gearhead		
RE 25	107/109					75.3		
RE 25	107/109	GP 26/GP 32	270/272			●		
RE 25	107/109	KD 32, 1.0 - 4.5 Nm	281			●		
RE 25	107/109	GP 32, 0.75 - 6.0 Nm	273/276			●		
RE 25	107/109	GP 32 S	301-303			●		
RE 25, 20 W	108					63.8		
RE 25, 20 W	108	GP 26/GP 32	270/272			●		
RE 25, 20 W	108	KD 32, 1.0 - 4.5 Nm	281			●		
RE 25, 20 W	108	GP 32, 0.75 - 6.0 Nm	273/276			●		
RE 25, 20 W	108	GP 32 S	301-303			●		
RE 25, 20 W	108			AB 28	372	94.3		
RE 25, 20 W	108	GP 26/GP 32	270/272	AB 28	372	●		
RE 25, 20 W	108	KD 32, 1.0 - 4.5 Nm	281	AB 28	372	●		
RE 25, 20 W	108	GP 32, 0.75 - 6.0 Nm	273/276	AB 28	372	●		
RE 25, 20 W	108	GP 32 S	301-303	AB 28	372	●		
RE 25, 20 W	109			AB 28	372	105.8		
RE 25, 20 W	109	GP 26/GP 32	270/272	AB 28	372	●		
RE 25, 20 W	109	KD 32, 1.0 - 4.5 Nm	281	AB 28	372	●		
RE 25, 20 W	109	GP 32, 0.75 - 6.0 Nm	273/276	AB 28	372	●		
RE 25, 20 W	109	GP 32 S	301-303	AB 28	372	●		
RE 30, 15 W	110					88.8		
RE 30, 15 W	110	GP 32, 0.75 - 4.5 Nm	274			●		
RE 30, 60 W	111					88.8		
RE 30, 60 W	111	GP 32, 0.75 - 6.0 Nm	272-278			●		
RE 30, 60 W	111	KD 32, 1.0 - 4.5 Nm	281			●		
RE 30, 60 W	111	GP 32 S	301-303			●		
RE 35, 90 W	112						91.7	
RE 35, 90 W	112	GP 32, 0.75 - 8.0 Nm	272-279				●	
RE 35, 90 W	112	GP 42, 3.0 - 15 Nm	283				●	
RE 35, 90 W	112	GP 32 S	301-303				●	
RE 35, 90 W	112			AB 28	372	124.3		
RE 35, 90 W	112	GP 32, 0.75 - 8.0 Nm	272-279	AB 28	372	●		
RE 35, 90 W	112	GP 42, 3.0 - 15 Nm	283	AB 28	372	●		
RE 35, 90 W	112	GP 32 S	301-303	AB 28	372	●		

Technical Data

Supply voltage V_{CC}	5 V ± 10%
Output signal	EIA Standard RS 422
driver used:	DS26LS31
Phase shift Φ	90°e ± 45°e
Signal rise time (typically, at C_L = 25 pF, R_L = 2.7 kΩ, 25 °C)	180 ns
Signal fall time (typically, at C_L = 25 pF, R_L = 2.7 kΩ, 25 °C)	40 ns
Index pulse width	90°e
Operating temperature range	-40…+100 °C
Moment of inertia of code wheel	≤ 0.6 gcm²
Max. angular acceleration	250000 rad s⁻²
Output current per channel	min. -20 mA, max. 20 mA
Option	1000 Counts per turn, 2 Channels

The index signal I is synchronized with channel A or B.

Pin Allocation

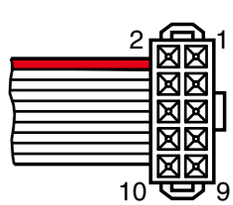

1 N.C.
2 V_{CC}
3 GND
4 N.C.
5 Channel $\overline{A}$
6 Channel A
7 Channel $\overline{B}$
8 Channel B
9 Channel $\overline{I}$ (Index)
10 Channel I (Index)

Pin type DIN 41651/
EN 60603-13
flat band cable AWG 28

Connection example

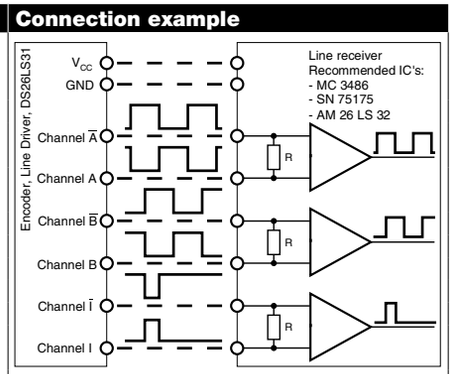

Terminal resistance R = typical 120 Ω

Encoder HEDL 5540 500 CPT, 3 Channels, with Line Driver RS 422

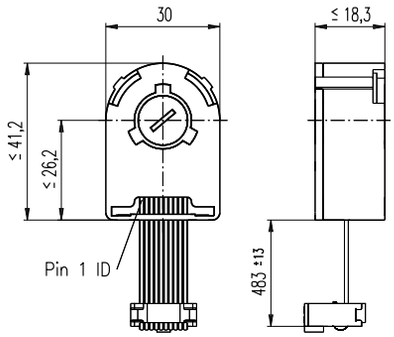

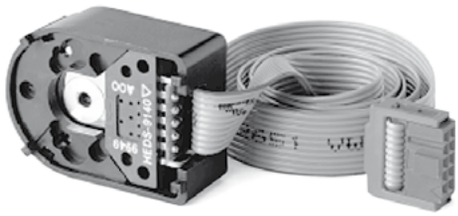

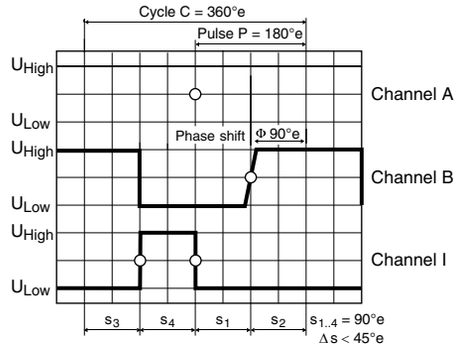

Direction of rotation cw (definition cw p. 78)

Stock program
Standard program
Special program (on request)

Type	Part Numbers 110512	110514	110516	110518
Counts per turn	500	500	500	500
Number of channels	3	3	3	3
Max. operating frequency (kHz)	100	100	100	100
Max. speed (rpm)	12000	12000	12000	12000
Shaft diameter (mm)	3	4	6	8

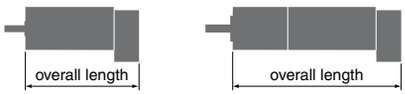

maxon Modular System

+ Motor	Page	+ Gearhead	Page	+ Brake	Page	Overall length [mm] / ● see Gearhead		
RE 40, 150 W	114						91.7	
RE 40, 150 W	114	GP 42, 3.0 - 15 Nm	283				●	
RE 40, 150 W	114	GP 52, 4.0 - 30 Nm	287				●	
RE 40, 150 W	114			AB 28	372	124.3		
RE 40, 150 W	114	GP 42, 3.0 - 15 Nm	283	AB 28	372	●		
RE 40, 150 W	114	GP 52, 4.0 - 30 Nm	287	AB 28	372	●		
RE 50, 200 W	115							128.7
RE 50, 200 W	115	GP 52, 4 - 30 Nm	288					●
RE 50, 200 W	115	GP 62, 8 - 50 Nm	289					●
RE 65, 250 W	116							157.3
RE 65, 250 W	116	GP 81, 20 - 120 Nm	290					●
A-max 26	134-140					63.1		
A-max 26	134-140	GP 26, 0.75 - 4.5 Nm	270			●		
A-max 26	134-140	GS 30/GP 32	271/274			●		
A-max 26	134-140	GP 32, 0.75 - 6.0 Nm	273/277			●		
A-max 26	134-140	GS 38, 0.1 - 0.6 Nm	282			●		
A-max 26	134-140	GP 32 S	301-303			●		
A-max 32	142/144						82.3	
A-max 32	142/144	GP 32, 0.75 - 6.0 Nm	272-277				●	
A-max 32	142/144	GS 38, 0.1 - 0.6 Nm	282				●	
A-max 32	142/144	GP 32 S	301-303				●	

Technical Data

Supply voltage V_{CC}	5 V ± 10%
Output signal driver used:	EIA Standard RS 422 DS26LS31
Phase shift Φ	90°e ± 45°e
Signal rise time (typically, at C_L = 25 pF, R_L = 2.7 kΩ, 25 °C)	180 ns
Signal fall time (typically, at C_L = 25 pF, R_L = 2.7 kΩ, 25 °C)	40 ns
Index pulse width	90°e
Operating temperature range	-40…+100 °C
Moment of inertia of code wheel	≤ 0.6 gcm²
Max. angular acceleration	250000 rad s⁻²
Output current per channel	min. -20 mA, max. 20 mA
Option	1000 Counts per turn, 2 Channels

The index signal I is synchronized with channel A or B.

Pin Allocation

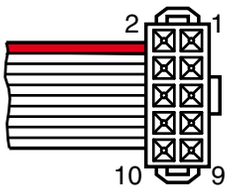

1 N.C.
2 V_{CC}
3 GND
4 N.C.
5 Channel $\overline{A}$
6 Channel A
7 Channel $\overline{B}$
8 Channel B
9 Channel $\overline{I}$ (Index)
10 Channel I (Index)

Pin type DIN 41651/
EN 60603-13
flat band cable AWG 28

Connection example

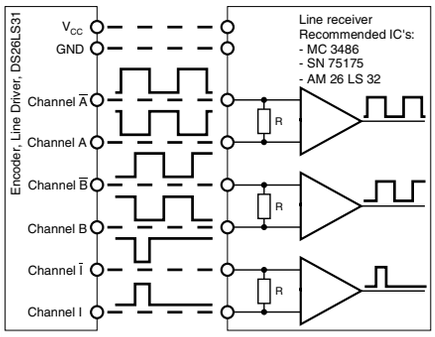

Terminal resistance R = typical 120 Ω

Encoder HEDL 5540 500 CPT, 3 Channels, with Line Driver RS 422

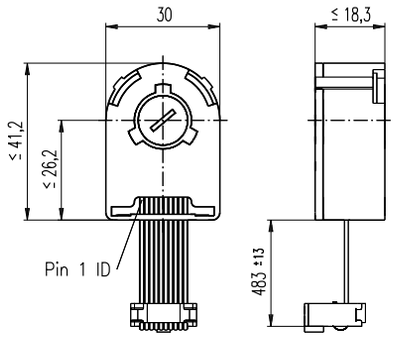

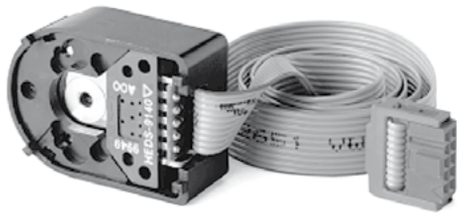

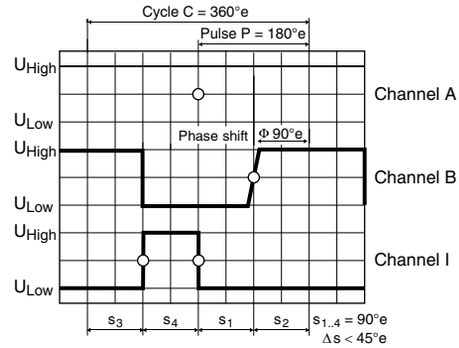

Direction of rotation cw (definition cw p. 78)

Stock program
Standard program
Special program (on request)

Type	Part Numbers 110512	110514	110516
Counts per turn	500	500	500
Number of channels	3	3	3
Max. operating frequency (kHz)	100	100	100
Max. speed (rpm)	12000	12000	12000
Shaft diameter (mm)	3	4	6

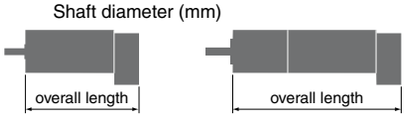

maxon Modular System

+ Motor	Page	+ Gearhead	Page	+ Brake	Page	Overall length [mm] / ● see Gearhead		
EC 32, 80 W	192					78.4		
EC 32, 80 W	192	GP 32, 0.75 - 6.0 Nm	272-278			●		
EC 32, 80 W	192	GP 32 S	301-303			●		
EC 40, 170 W	193						103.4	
EC 40, 170 W	193	GP 42, 3.0 - 15 Nm	283				●	
EC 40, 170 W	193	GP 52, 4.0 - 30 Nm	287				●	
EC-max 30, 40 W	204					62.6		
EC-max 30, 40 W	204	GP 32, 1.0 - 8.0 Nm	277/279			●		
EC-max 30, 40 W	204	KD 32, 1.0 - 4.5 Nm	281			●		
EC-max 30, 40 W	204	GP 32 S	301-303			●		
EC-max 30, 40 W	204			AB 20	370	98.4		
EC-max 30, 40 W	204	GP 32, 1.0 - 8.0 Nm	277/279	AB 20	370	●		
EC-max 30, 40 W	204	KD 32, 1.0 - 4.5 Nm	281	AB 20	370	●		
EC-max 30, 40 W	204	GP 32 S	301-303	AB 20	370	●		
EC-max 30, 60 W	205					84.6		
EC-max 30, 60 W	205	GP 32, 1.0 - 8.0 Nm	277/279			●		
EC-max 30, 60 W	205	KD 32, 1.0 - 4.5 Nm	281			●		
EC-max 30, 60 W	205	GP 42, 3 - 15 Nm	284			●		
EC-max 30, 60 W	205			AB 20	370	120.4		
EC-max 30, 60 W	205	GP 32, 1.0 - 8.0 Nm	277/279	AB 20	370	●		
EC-max 30, 60 W	205	KD 32, 1.0 - 4.5 Nm	281	AB 20	370	●		
EC-max 30, 60 W	205	GP 42, 3 - 15 Nm	284	AB 20	370	●		
EC-max 40, 70 W	206						81.4	
EC-max 40, 70 W	206	GP 42, 3 - 15 Nm	284				●	
EC-max 40, 70 W	206			AB 28	371		110.7	
EC-max 40, 70 W	206	GP 42, 3 - 15 Nm	284	AB 28	371		●	
EC-max 40, 120 W	207						111.4	
EC-max 40, 120 W	207	GP 52, 4 - 30 Nm	288				●	
EC-max 40, 120 W	207			AB 28	371		140.7	
EC-max 40, 120 W	207	GP 52, 4 - 30 Nm	288	AB 28	371		●	

Technical Data

Supply voltage V_{CC}	5 V ± 10%
Output signal	EIA Standard RS 422
driver used:	DS26LS31
Phase shift Φ	90°e ± 45°e
Signal rise time (typically, at C_L = 25 pF, R_L = 2.7 kΩ, 25 °C)	180 ns
Signal fall time (typically, at C_L = 25 pF, R_L = 2.7 kΩ, 25 °C)	40 ns
Index pulse width	90°e
Operating temperature range	-40…+100 °C
Moment of inertia of code wheel	≤ 0.6 gcm²
Max. angular acceleration	250000 rad s⁻²
Output current per channel	min. -20 mA, max. 20 mA
Option	1000 Counts per turn, 2 Channels

The index signal I is synchronized with channel A or B.

Pin Allocation

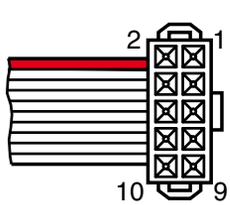

1 N.C.
2 V_{CC}
3 GND
4 N.C.
5 Channel $\overline{A}$
6 Channel A
7 Channel $\overline{B}$
8 Channel B
9 Channel $\overline{I}$ (Index)
10 Channel I (Index)

Pin type DIN 41651/
EN 60603-13
flat band cable AWG 28

Connection example

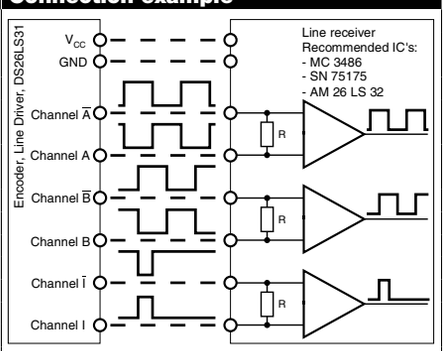

Terminal resistance R = typical 120 Ω

Encoder HEDL 5540 500 CPT, 3 Channels, with Line Driver RS 422

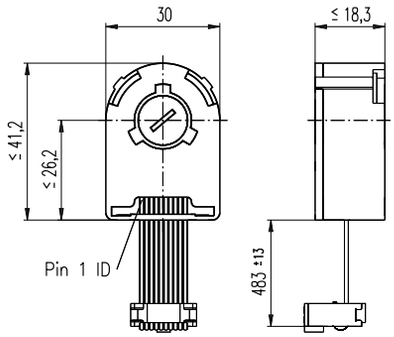

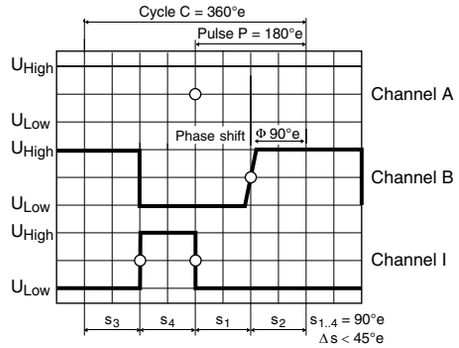

Direction of rotation cw (definition cw p. 78)

Stock program
Standard program
Special program (on request)

Type	Part Numbers 110512	110514	110516	X drives
Counts per turn	500	500	500	500
Number of channels	3	3	3	3
Max. operating frequency (kHz)	100	100	100	100
Max. speed (rpm)	12000	12000	12000	12000
Shaft diameter (mm)	3	4	6	3–6

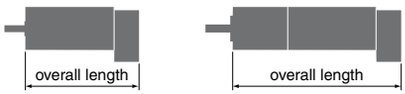

maxon Modular System

+ Motor	Page	+ Gearhead	Page	+ Brake	Page	Overall length [mm] / ● see Gearhead			
EC-4pole 22, 90 W	211					70.1			
EC-4pole 22, 90 W	211	GP 22/GP 32	266/277			●			
EC-4pole 22, 90 W	211	GP 32 S	301-303			●			
EC-4pole 22, 120 W	212					87.5			
EC-4pole 22, 120 W	212	GP 22/GP 32	266/277			●			
EC-4pole 22, 120 W	212	GP 32 S	301-303			●			
EC-4pole 30, 100 W	213						67.6		
EC-4pole 30, 100 W	213	GP 32, 4.0 - 8.0 Nm	279				●		
EC-4pole 30, 100 W	213	GP 42, 3 - 15 Nm	284				●		
EC-4pole 30, 100 W	213			AB 20	370		104.0		
EC-4pole 30, 100 W	213	GP 32, 4.0 - 8.0 Nm	279	AB 20	370		●		
EC-4pole 30, 100 W	213	GP 42, 3 - 15 Nm	284	AB 20	370		●		
EC-4pole 30, 200 W	214						84.6		
EC-4pole 30, 200 W	214	GP 32, 4.0 - 8.0 Nm	279				●		
EC-4pole 30, 200 W	214	GP 42, 3 - 15 Nm	284				●		
EC-4pole 30, 200 W	214			AB 20	370		121.0		
EC-4pole 30, 200 W	214	GP 32, 4.0 - 8.0 Nm	279	AB 20	370		●		
EC-4pole 30, 200 W	214	GP 42, 3 - 15 Nm	284	AB 20	370		●		
EC-i 40, 50 W	228							49.0	
EC-i 40, 50 W	228	GP 32, 1 - 6 Nm	277					●	
EC-i 40, 50 W	228	GP 42, 3 - 15 Nm	284					●	
EC-i 40, 50 W	228	GP 32 S	301-303					●	
EC-i 40, 70 W	229							59.0	
EC-i 40, 70 W	229	GP 32, 1 - 6 Nm	277					●	
EC-i 40, 70 W	229	GP 42, 3 - 15 Nm	284					●	
EC-i 40, 70 W	229	GP 32 S	301-303					●	
DCX 22 S									online
DCX 22 L									online
DCX 32 L									online
DCX 35 L									online

Technical Data

Supply voltage V_{CC}	5 V ± 10%
Output signal driver used:	EIA Standard RS 422 DS26LS31
Phase shift Φ	90°e ± 45°e
Signal rise time (typically, at C_L = 25 pF, R_L = 2.7 kΩ, 25 °C)	180 ns
Signal fall time (typically, at C_L = 25 pF, R_L = 2.7 kΩ, 25 °C)	40 ns
Index pulse width	90°e
Operating temperature range	-40…+100 °C
Moment of inertia of code wheel	≤ 0.6 gcm²
Max. angular acceleration	250000 rad s⁻²
Output current per channel	min. -20 mA, max. 20 mA
Option	1000 Counts per turn, 2 Channels

The index signal I is synchronized with channel A or B.

Pin Allocation

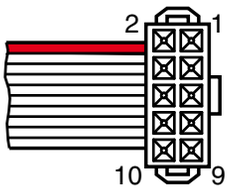

1 N.C.
2 V_{CC}
3 GND
4 N.C.
5 Channel $\overline{A}$
6 Channel A
7 Channel $\overline{B}$
8 Channel B
9 Channel $\overline{I}$ (Index)
10 Channel I (Index)

Pin type DIN 41651/
EN 60603-13
flat band cable AWG 28

Connection example

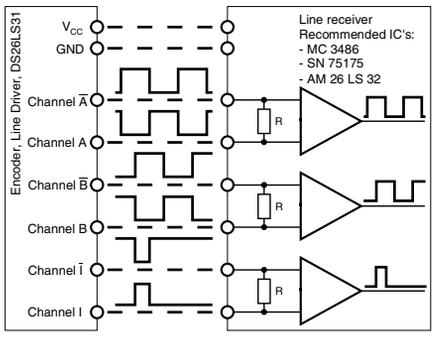

Terminal resistance R = typical 120 Ω

Encoder HEDL 9140 500 CPT, 3 Channels, with Line Driver RS 422

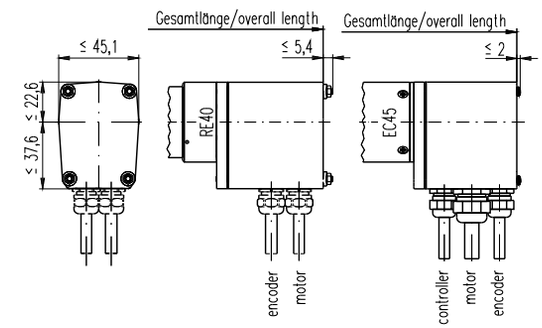

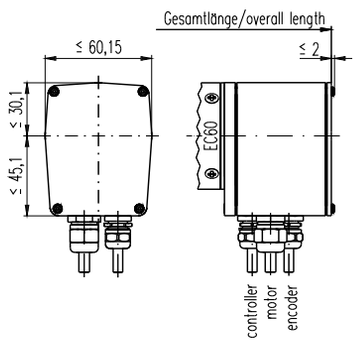

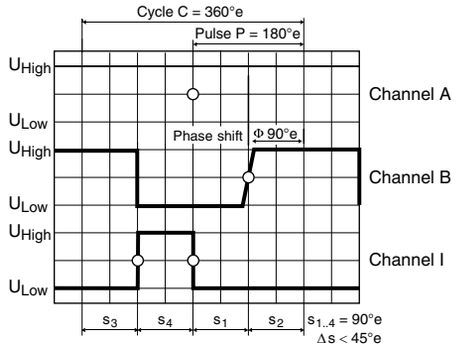

Direction of rotation cw (definition cw p. 78)

Stock program
Standard program
Special program (on request)

Part Numbers

137959

Type	
Counts per turn	500
Number of channels	3
Max. operating frequency (kHz)	100
Max. speed (rpm)	12000

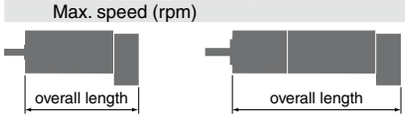

maxon Modular System

+ Motor	Page	+ Gearhead	Page	+ Brake	Page	Overall length [mm] / ● see Gearhead
RE 40, 150 W	114					125.1
RE 40, 150 W	114	GP 42, 3 - 15 Nm	283			●
RE 40, 150 W	114	GP 52, 4 - 30 Nm	287			●
RE 40, 150 W	114			AB 28	373	135.6
RE 40, 150 W	114	GP 42, 3 - 15 Nm	283	AB 28	373	●
RE 40, 150 W	114	GP 52, 4 - 30 Nm	287	AB 28	373	●
EC 45, 150 W	194					126.8
EC 45, 150 W	194	GP 42, 3 - 15 Nm	283			●
EC 45, 150 W	194	GP 52, 4 - 30 Nm	287			●
EC 45, 150 W	194			AB 28	373	135.6
EC 45, 150 W	194	GP 42, 3 - 15 Nm	283	AB 28	373	●
EC 45, 150 W	194	GP 52, 4 - 30 Nm	287	AB 28	373	●
EC 45, 250 W	195					159.6
EC 45, 250 W	195	GP 42, 3 - 15 Nm	284			●
EC 45, 250 W	195	GP 52, 4 - 30 Nm	287			●
EC 45, 250 W	195	GP 62, 8 - 50 Nm	289			●
EC 45, 250 W	195			AB 28	373	168.4
EC 45, 250 W	195	GP 42, 3 - 15 Nm	284	AB 28	373	●
EC 45, 250 W	195	GP 52, 4 - 30 Nm	287	AB 28	373	●
EC 45, 250 W	195	GP 62, 8 - 50 Nm	289	AB 28	373	●
EC 60, 400 W	196					177.3
EC 60, 400 W	196	GP 81, 20 - 120 Nm	290			●
EC 60, 400 W	196			AB 41	375	214.9
EC 60, 400 W	196	GP 81, 20 - 120 Nm	290	AB 41	375	●

Technical Data

Supply voltage V_{CC}	5 V ± 10%
Output signal	EIA Standard RS 422
driver used:	DS26LS31
Phase shift Φ	90°e ± 45°e
Signal rise time (typically, at C_L = 25 pF, R_L = 11 kΩ, 25 °C)	180 ns
Signal fall time (typically, at C_L = 25 pF, R_L = 11 kΩ, 25 °C)	40 ns
Index pulse width	90°e
Operating temperature range	-40…+85 °C
Moment of inertia of code wheel	≤ 0.6 gcm²
Max. angular acceleration	250000 rad s⁻²
Output current per channel	min. -20 mA, max. 20 mA

The index signal I is synchronized with channel A or B.

Pin Allocation

Cable white	=	2	V_{CC} 5 VDC
Cable brown	=	3	GND
Cable green	=	5	Channel $\overline{A}$
Cable yellow	=	6	Channel A
Cable grey	=	7	Channel $\overline{B}$
Cable pink	=	8	Channel B
Cable blue	=	9	Channel $\overline{I}$ (Index)
Cable red	=	10	Channel I (Index)

Cable size 8 × 0.25 mm²

Connection example

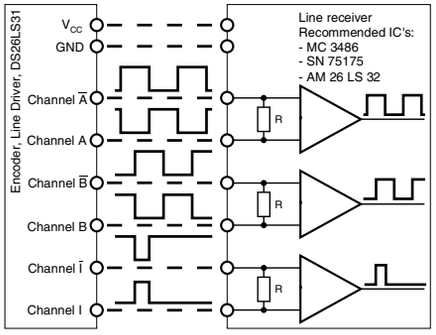

Terminal resistance R = typical 120 Ω

Encoder HEDL 9140 500 CPT, 3 Channels, with Line Driver RS 422

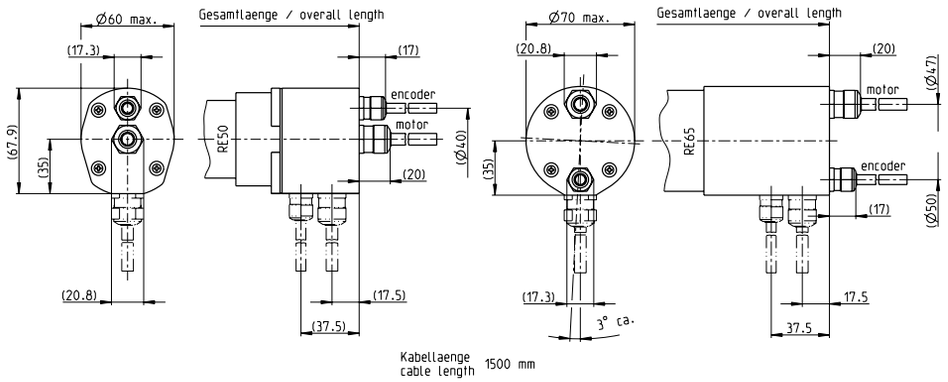

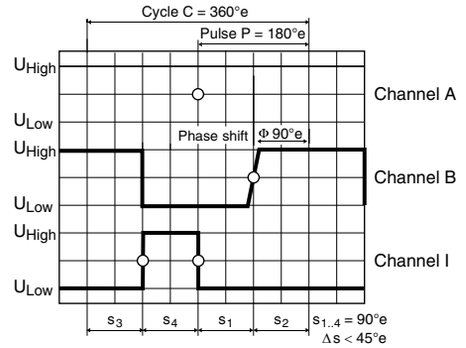

Direction of rotation cw (definition cw p. 78)

Stock program
Standard program
Special program (on request)

	Part Numbers	
cable outlet axial	386051	386001
cable outlet radial	386053	386002

Type		
Counts per turn	500	500
Number of channels	3	3
Max. operating frequency (kHz)	100	100
Max. speed (rpm)	12 000	12 000

maxon Modular System

+ Motor	Page	+ Gearhead	Page	+ Brake	Page	Overall length [mm] / ● see Gearhead	
RE 50, 200 W	115					170.4	
RE 50, 200 W	115	GP 52, 4 - 30 Nm	288			●	
RE 50, 200 W	115	GP 62, 8 - 50 Nm	289			●	
RE 50, 200 W	115			AB 44	376	183.4	
RE 50, 200 W	115	GP 52, 4 - 30 Nm	288	AB 44	376	●	
RE 50, 200 W	115	GP 62, 8 - 50 Nm	289	AB 44	376	●	
RE 65, 250 W	116						187.5
RE 65, 250 W	116	GP 81, 20 - 120 Nm	290				●
RE 65, 250 W	116			AB 44	376		205.5
RE 65, 250 W	116	GP 81, 20 - 120 Nm	290	AB 44	376		●

Technical Data

Supply voltage V_{CC}	5 V ± 10%
Output signal	EIA Standard RS 422
driver used:	DS26LS31
Phase shift Φ	90°e ± 45°e
Signal rise time (typically, at C_L = 25 pF, R_L = 11 kΩ, 25 °C)	180 ns
Signal fall time (typically, at C_L = 25 pF, R_L = 11 kΩ, 25 °C)	40 ns
Index pulse width	90°e
Operating temperature range	-40…+85 °C
Moment of inertia of code wheel	≤ 0.6 gcm²
Max. angular acceleration	250 000 rad s⁻²
Output current per channel	min. -20 mA, max. 20 mA
Protection to	IP54

The index signal I is synchronized with channel A or B.

Pin Allocation

Encoder

Cable white	=	V_{CC} 5 VDC
Cable brown	=	GND
Cable green	=	Channel $\overline{A}$
Cable yellow	=	Channel A
Cable grey	=	Channel $\overline{B}$
Cable pink	=	Channel B
Cable blue	=	Channel $\overline{I}$ (Index)
Cable red	=	Channel I (Index)

Cable size 8 × 0.25 mm²

Motor

Cable white	=	Motor +
Cable brown	=	Motor -

Cable size 2 × 1.0 mm²

Connection example

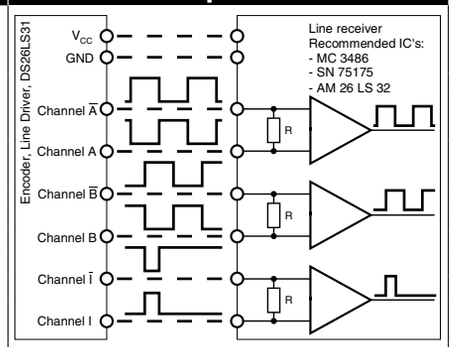

Terminal resistance R = typical 120 Ω

Encoder MEnc 10 12 CPT, 2 Channels

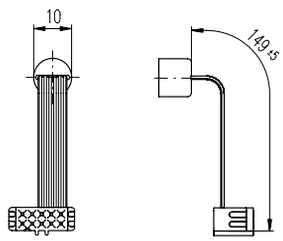

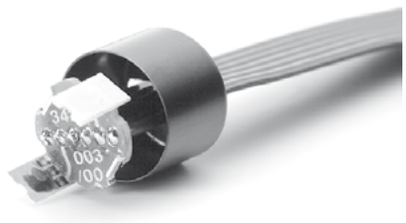

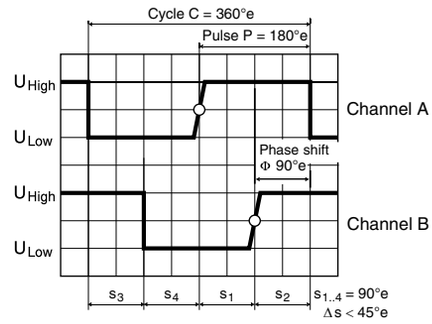

Direction of rotation cw (definition cw p. 78)

Stock program
Standard program
Special program (on request)

Part Numbers	
	138061
Type	
Counts per turn	12
Number of channels	2
Max. operating frequency (kHz)	20
Max. speed (rpm)	100 000

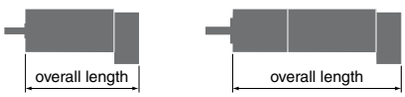

maxon Modular System

+ Motor	Page	+ Gearhead	Page	Overall length [mm] / ● see Gearhead
RE 10, 0.75 W	83			25.1
RE 10, 0.75 W	83	GP 10, 0.005 - 0.1 Nm	244	●
RE 10, 0.75 W	83	GP 10, 0.01 - 0.15 Nm	245	●
RE 10, 1.5 W	85			32.7
RE 10, 1.5 W	85	GP 10, 0.005 - 0.1 Nm	244	●
RE 10, 1.5 W	85	GP 10, 0.01 - 0.15 Nm	245	●

Technical Data

Supply voltage V_{CC}	3.8 - 24 V
Output signal V_{CC} = 5 VDC	TTL compatible
Phase shift Φ	90°e ± 45°e
Power input at V_{CC} 5 VDC	max. 8 mA
Inertia of the magnetic disc	0.03 gcm²
Operating temperature range	-20…+80 °C
Open collector output with integrated pull-up resistance	10 kΩ ± 20%

Pin Allocation

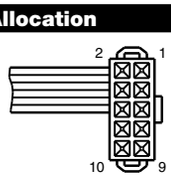

1 Motor +
2 V_{CC}
3 Channel A
4 Channel B
5 GND
6 Motor –

Pin type DIN 41651/
EN 60603-13
(Type 3M 89110-0101 HA)
flat band cable AWG 28

Connection example

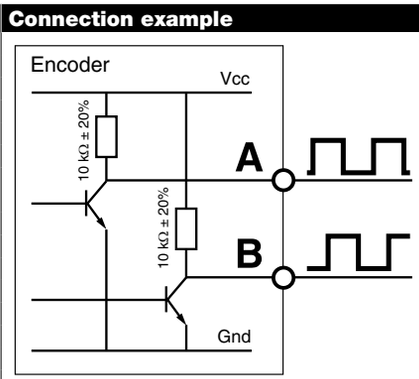

Encoder MEnc 13 16 CPT, 2 Channels

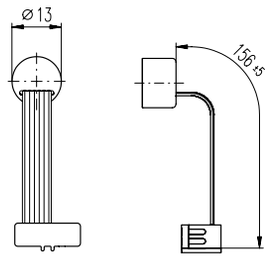

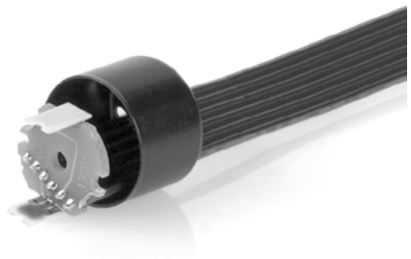

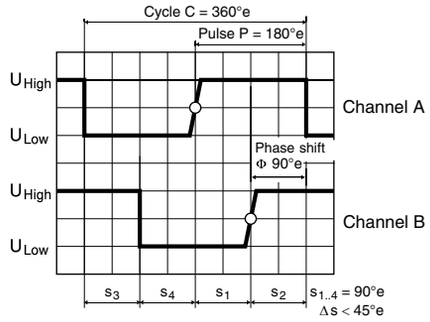

Direction of rotation cw (definition cw p. 78)

Stock program
Standard program
Special program (on request)

Part Numbers	
	110778

Type	
Counts per turn	16
Number of channels	2
Max. operating frequency (kHz)	20
Max. speed (rpm)	75 000

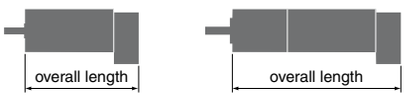

maxon Modular System

+ Motor	Page	+ Gearhead	Page	Overall length [mm] / ● see Gearhead
RE 13, 0.75 W	88/89			27.0/29.4
RE 13, 0.75 W	89	GP 13, 0.05 - 0.15 Nm	247	●
RE 13, 0.75 W	89	GP 13, 0.2 - 0.35 Nm	248	●
RE 13, 2 W	92/93			39.2/41.6
RE 13, 2 W	93	GP 13, 0.05 - 0.15 Nm	247	●
RE 13, 2 W	93	GP 13, 0.2 - 0.35 Nm	248	●
RE 13, 1.5 W	96/97			30.3/32.7
RE 13, 1.5 W	97	GP 13, 0.05 - 0.15 Nm	247	●
RE 13, 1.5 W	97	GP 13, 0.2 - 0.35 Nm	248	●
RE 13, 3 W	100/101			42.5/44.9
RE 13, 3 W	101	GP 13, 0.05 - 0.15 Nm	247	●
RE 13, 3 W	101	GP 13, 0.2 - 0.35 Nm	248	●
RE 16, 3.2 W	104			46.5
RE 16, 3.2 W	104	GP 16, 0.06 - 0.18 Nm	31	●
RE 16, 3.2 W	104	GP 16, 0.1 - 0.6 Nm	254/255	●
RE 16, 3.2 W	104	GP 16 S	296/297	●
RE 16, 4.5 W	106			49.7
RE 16, 4.5 W	106	GP 16, 0.06 - 0.18 Nm	31	●
RE 16, 4.5 W	106	GP 16, 0.1 - 0.6 Nm	254/255	●
RE 16, 4.5 W	106	GP 16 S	296/297	●
A-max 16	122/124			33.5
A-max 16	122/124	GS 16, 0.01 - 0.03 Nm	250/251	●
A-max 16	122/124	GS 16, 0.06 - 0.1 Nm	252/253	●
A-max 16	122/124	GP 16, 0.06 - 0.18 Nm	31	●
A-max 16	122/124	GP 16, 0.1 - 0.3 Nm	254	●
A-max 16	122/124	GP 16 S	296/297	●
A-max 19	126/128			36.4/39.0
A-max 19	126/128	GP 19, 0.1 - 0.3 Nm	257	●
A-max 19	126/128	GP 22, 0.5 - 2.0 Nm	262/264	●
A-max 19	126/128	GS 24, 0.1 Nm	269	●
A-max 19	126/128	GP 22 S	299/300	●

Technical Data

Supply voltage V_{CC}	3.8 - 24 V
Output signal V_{CC} = 5 VDC	TTL compatible
Phase shift Φ	90°e ± 45°e
Power input at V_{CC} 5 VDC	max. 8 mA
Inertia of the magnetic disc	0.07 gcm²
Operating temperature range	-20…+80 °C
Open collector output with integrated pull-up resistance	10 kΩ ± 20%

Pin Allocation

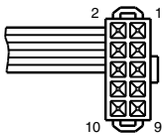

1 Motor +
2 V_{CC}
3 Channel A
4 Channel B
5 GND
6 Motor –

Pin type
DIN 41651/EN 60603-13
(Type 3M 89110-0101 HA)
flat band cable AWG 28

Connection example

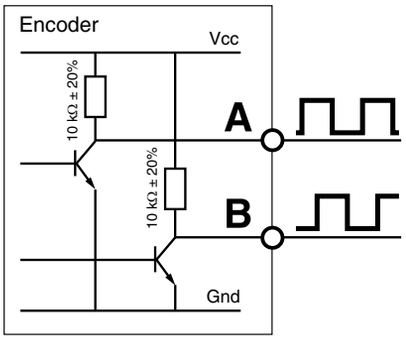

Encoder MEnc 13 16 CPT, 2 Channels

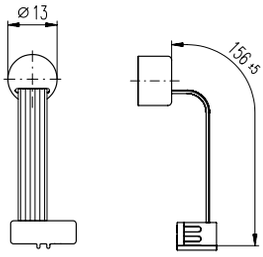

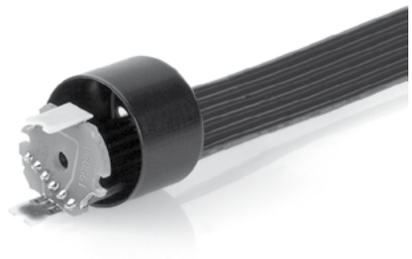

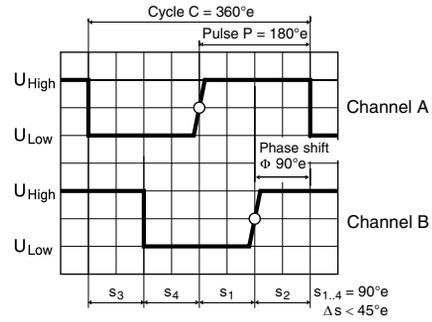

Direction of rotation cw (definition cw p. 78)

Stock program
Standard program
Special program (on request)

Part Numbers	
	110778
Type	
Counts per turn	16
Number of channels	2
Max. operating frequency (kHz)	20
Max. speed (rpm)	75000

maxon Modular System

+ Motor	Page	+ Gearhead	Page	Overall length [mm] / ● see Gearhead
A-max 22	130/132			39.0
A-max 22	130/132	GP 22, 0.1 - 0.6 Nm	260/261	●
A-max 22	130/132	GP 22, 0.5 - 2.0 Nm	262/264	●
A-max 22	130/132	GS 24, 0.1 Nm	269	●
A-max 22	130/132	GP 22 S	299/300	●
A-max 26	134-140			51.8
A-max 26	134-140	GP 26, 0.75 - 4.5 Nm	270	●
A-max 26	134-140	GS 30, 0.07 - 0.2 Nm	271	●
A-max 26	134-140	GP 32, 0.75 - 4.5 Nm	272	●
A-max 26	134-140	GP 32, 0.75 - 6.0 Nm	273	●
A-max 26	134-140	GS 38, 0.1 - 0.6 Nm	282	●
A-max 26	134-140	GP 32 S	301-303	●

Technical Data

Supply voltage V_{CC}	3.8 - 24 V
Output signal V_{CC} = 5 VDC	TTL compatible
Phase shift Φ	90°e ± 45°e
Power input at V_{CC} 5 VDC	max. 8 mA
Inertia of the magnetic disc	0.07 gcm²
Operating temperature range	-20…+80 °C
Open collector output with integrated pull-up resistance	10 kΩ ± 20%

Pin Allocation

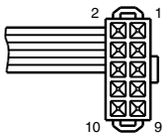

1 Motor +
2 V_{CC}
3 Channel A
4 Channel B
5 GND
6 Motor –

Pin type
DIN 41651/EN 60603-13
(Type 3M 89110-0101 HA)
flat band cable AWG 28

Connection example

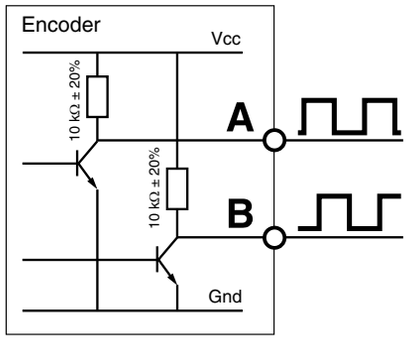

DC Tacho DCT 22 0.52 Volt

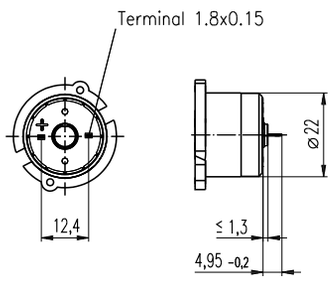

Important Information

- Tacho with moving coil, maxon system.
- Tacho with precious metal commutation.
- To establish total inertia add motor and tacho inertias.
- With the output shaft turning CW as seen from the mounting surface, the tacho output voltage will be positive at the + terminal.
- A high impedance load is recommended at tacho terminals.
- The tacho current should be kept low.
- The indicated resonance frequency refers to the motor-tacho rotor system.

Stock program
Standard program
Special program (on request)

Part Numbers

Type	118909	118910
Shaft diameter (mm)	3	4

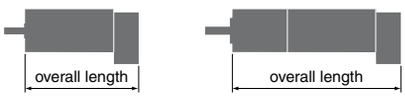

maxon Modular System

+ Motor	Page	+ Gearhead	Page	Overall length [mm] / ● see Gearhead	
RE 25	107/109			76.8	
RE 25	107/109	GP 26, 0.75 - 2.0 Nm	270	●	
RE 25	107/109	GP 32, 0.75 - 4.5 Nm	272/273	●	
RE 25	107/109	GP 32, 0.75 - 6.0 Nm	276	●	
RE 25	107/109	GP 32, 1.0 - 4.5 Nm	281	●	
RE 25	107/109	GP 32 S	301-303	●	
RE 25, 20 W	108			65.3	
RE 25, 20 W	108	GP 22, 0.5 Nm	262	●	
RE 25, 20 W	108	GP 26, 0.75 - 2.0 Nm	270	●	
RE 25, 20 W	108	GP 32, 0.75 - 4.5 Nm	272/273	●	
RE 25, 20 W	108	GP 32, 0.75 - 6.0 Nm	276	●	
RE 25, 20 W	108	GP 32, 1.0 - 4.5 Nm	281	●	
RE 25, 20 W	108	GP 32 S	301-303	●	
RE 35, 90 W	112				89.1
RE 35, 90 W	112	GP 32, 0.75 - 6.0 Nm	272-278		●
RE 35, 90 W	112	GP 32, 8 Nm	279		●
RE 35, 90 W	112	GP 42, 3.0 - 15 Nm	283		●
RE 35, 90 W	112	GP 32 S	301-303		●

Technical Data

Output voltage per 1000 rpm	0.52 V	Max. recommended current	10 mA
Terminal resistance tacho	37.7 Ω	Tolerance of the output voltage	± 15 %
Typical peak to peak ripple	≤ 6 %	Rotor inertia (tacho only)	< 3 gcm²
Ripple frequency per turn	14	Resonance frequency with motors on p. 107 – 109	> 2 kHz
Linearity between 500 and 5000 rpm unloaded	± 0.2 %	with motors on p. 112	> 4.5 kHz
Linearity with 10 kΩ load resistance	± 0.7 %	Temperature range	-20 ... +65 °C
Reversal error	± 0.1 %		
Temperature coefficient of EMF (magnet)	-0.02 % /°C	Option: Pigtails in place of solder terminals.	
Temperature coefficient of coil resistance	+0.4 % /°C		

Connection example

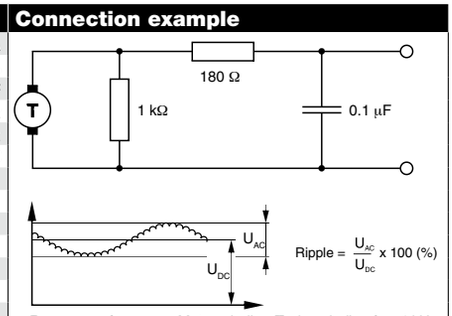

Resonance frequency Motor winding-Tacho winding $f_R \geq 4$ kHz

Resolver Res 26 10 Volt

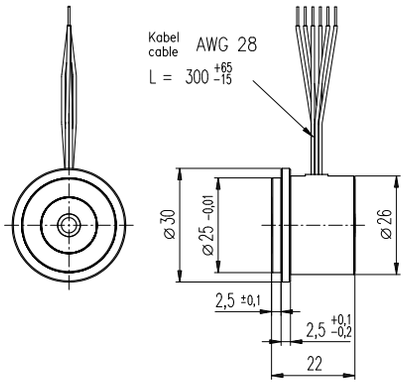

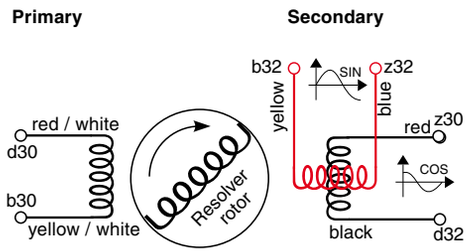

Output voltage as a function of the rotor angle after demodulation of the input frequency.

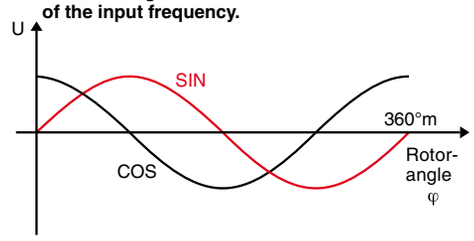

Stock program
Standard program
Special program (on request)

Part Numbers	166488	133405	268912	199287
Type				
Shaft diameter (mm)	4	6	6	6
Max. speed (rpm)	10000	10000	10000	10000

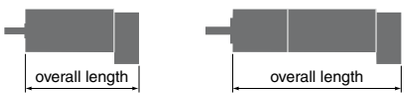

maxon Modular System

+ Motor	Page	+ Gearhead	Page	Overall length [mm] / ● see Gearhead			
EC 32, 80 W	192			80.1			
EC 32, 80 W	192	GP 32, 0.75 - 6.0 Nm	272-278	●			
EC 32, 80 W	192	GP 32 S	301-303	●			
EC 40, 170 W	193				107.2		
EC 40, 170 W	193	GP 42, 3.0 - 15 Nm	283		●		
EC 40, 170 W	193	GP 52, 4.0 - 30 Nm	287		●		
EC 45, 150 W	194					111.2	
EC 45, 150 W	194	GP 42, 3.0 - 15 Nm	283			●	
EC 45, 150 W	194	GP 52, 4.0 - 30 Nm	287			●	
EC 45, 250 W	195					144.0	
EC 45, 250 W	195	GP 42, 3.0 - 15 Nm	283			●	
EC 45, 250 W	195	GP 52, 4.0 - 30 Nm	287			●	
EC 45, 250 W	195	GP 62, 8.0 - 50 Nm	289			●	
EC 60, 400 W	196						177.3
EC 60, 400 W	196	GP 81, 20 - 120 Nm	290				●

Technical Data

Input voltage	10 V peak, 10 kHz	Rotor inertia	6 gcm²
Transmission ratio	0.5	Weight	40 g
Electrical error	± 10 minutes	Operating temperature range	-55 ... +155°C

For your personal notes

P [mW]	I [mA]	η [%]	n [rpm, min⁻¹]	M [mNm]

maxon motor control

Various 4-quadrant PWM servo controllers for permanent magnet-activated brushed DC motors and brushless EC motors meet all requirements in terms of performance and functionality. Thanks to the fast current controller and dynamic speed controller, outstanding control characteristics are achieved. Combined with maxon motors, the positioning controllers constitute complete solutions for highly demanding motion control applications.

ESCON servo controllers	340–344
1-Q-EC Amplifier	345–346
EPOS2, EPOS2 P, EPOS3 Positioning controller	347–357
MAXPOS Positioning controller	358–360
Summary and accessories	361–363

ESCON Overview

The ESCON servo controllers are small-sized, powerful 4-quadrant PWM servo controller for the highly efficient control of permanent magnet-activated DC motors.

The featured operating modes – speed control (closed loop), speed control (open loop), and current control – meet the highest requirements. The ESCON servo controllers are designed being commanded by an analog set value and features extensive analog and digital I/O functionality and are being configured via USB interface using the graphical user interface “ESCON Studio” for Windows PCs.

ESCON 36/2 DC
403112

ESCON 36/3 EC
414533

NEW ESCON Module 50/4 EC-S
446925

ESCON Module 50/5
438725

ESCON 50/5
409510

ESCON 70/10
422969

Depending on the ESCON variant, the following **motor types** can be operated
- **DC motor:** Permanent-magnet DC motor
- **EC motor:** Brushless, electronically commutated permanent-magnet DC motor (BLDC) with and without Hall sensors.

Various **operating modes** allow an adaptable use in a wide range of drive systems
- **Current controller:** The current controller compares the actual motor current (torque) with the applied set value. In case of deviation, the motor current is dynamically readjusted.
- **Speed controller (closed loop):** The closed loop speed controller compares the actual speed signal with the applied set value. In case of deviation, the speed is dynamically readjusted.
- **Speed controller (open loop):** The open loop speed controller feeds the motor with a voltage proportional to the applied speed set value. Changes in load are compensated using the IxR methodology.

Speed measurement by
- **Digital incremental encoder:** The encoders deliver simple square signals for further processing. Their impulses are counted to determine the speed. Channels A and B are phase-shifted signals, which are being compared to determine the sense of rotation.
- **DC tacho:** The DC tacho delivers a speed-proportional analog voltage.
- **Available Hall sensors:** The Hall sensors deliver six different combinations of switching impulses per electrical turn which are counted to determine speed. They also deliver phase-shifted signals that are being compared to determine the sense of rotation.
- **Sensorless EC:** The speed is determined by the progression of the induced voltage. The electronics evaluates the zero crossing of the induced voltage (EMF).

To the numerous **inputs** and **outputs,** various functionalities can be assigned to.

Set value (speed or current), **current limitation,** as well as **offset** can be assigned as follows.
- **Analog value:** The value is defined by an analog voltage set via external or internal potentiometer.
- **PWM value:** The value is defined by fixed frequency and amplitude. The desired change is achieved by variation of the duty cycle of 10…90%.
- **Fixed value:** The value is defined by a fixed preset value.
- **2 fixed values:** Value 1 is defined by a fixed preset value 1. Value 2 is defined by a fixed preset value 2. A digital input is used to switch between the two preset values.

Various functionalities are available to **enable** the power stage.
- **Enable:** Enables or disables the power stage.
- **Enable & Direction:** Enables or disables the power stage and determines the motor shaft’s direction of rotation.
- **Enable CW:** Enables or disables the power stage in direction of rotation-dependent sense. The rotor can only turn clockwise (CW).
- **Enable CCW:** Enables or disables the power stage in direction of rotation-dependent sense. The rotor can only turn counterclockwise (CCW).
- **Enable CW & CCW:** Enables or disables the power stage in direction of rotation-dependent sense. The rotor can only turn in defined direction. The signals are interlocked against each other.

The **ramp function** permits controlled acceleration/deceleration of the motor shaft in both, open loop and closed loop speed controller mode.
- **Analog ramp:** The ramp is defined by means of an internal potentiometer.
- **Fixed ramp:** The ramp is defined by a fixed preset value.

Stop: The motor shaft decelerates with preset speed ramp until complete standstill.

Ready: The Ready signal can be used to transmit the operational status (respectively fault) to a superior control.

Speed and Current Comparator: The digital output is set depending on the actual value.
- **Limit:** The digital output is set as soon as the preset value is reached. It remains set as long as the value is exceeded.

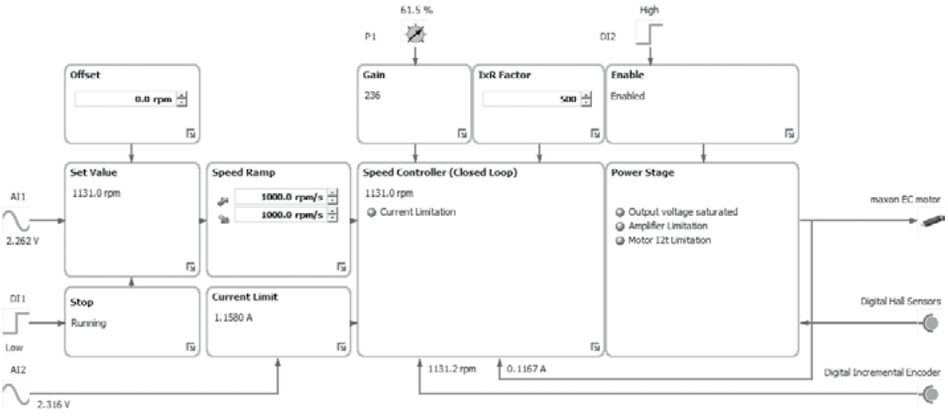

ESCON Studio (Controller Monitor)

- **Range:** The digital output is set as soon as the preset value range is reached. It remains set as long as the value remains in range.
- **Deviation:** The digital output is set as soon as the preset value deviation (based on the set value) is in range.

With the integrated **potentiometers** the additional following functions can be adjusted
- **Current Gain:** Adjustment of the current controller gain.
- **Speed Gain:** Adjustment of the speed controller gain.
- **IxR Factor:** The voltage drop caused by terminal resistance will be compensated in the range of [0…1000…2000].

Analog outputs allow monitoring of
- **Actual current:** Actually measured motor winding current.
- **Actual current averaged:** Actually measured motor winding current filtered by first order digital low-pass filter with a cut-off frequency of 5 Hz.
- **Actual speed:** Actually measured motor speed.
- **Actual speed averaged:** Actually measured motor speed filtered by 1st order digital low-pass filter with a cut-off frequency of 5 Hz.
- **Demand Current:** Demanded motor winding current.
- **Demand Speed:** Demanded motor speed.
- **Temperature Power Stage:** Actually measured power stage temperature.
- **Fixed value:** The output voltage is said fixed to the preset value.

Easy startup
Startup and parameterization are performed using the intuitive graphical user interface “ESCON Studio” with the help of simple to use, menu-guided wizards. The following wizards are available: Startup, Regulation Tuning, Firmware Update, Controller Monitor, Parameters, Data Recording, and Diagnostics.

Protective equipment
The servo controller has protective circuits against overcurrent, excess temperature, under- and overvoltage, against voltage transients, and against short-circuits in the motor cable. Furthermore it is equipped with protected digital inputs and outputs and an adjustable current limitation for protecting the motor and the load. The motor current and the actual speed of the motor shaft can be monitored by means of the analog output voltage.

Comprehensive documentation
Using the “Feature Comparison Chart”, the suitable ESCON servo controller can easily be determined. The “Hardware Reference” comprises the specifications of the hardware in detail. The documents “Firmware Version” and “Release Notes” describe changes and improvements of firmware and software. In addition, the graphical user interface “ESCON Studio” features a comprehensive online help.

Software
Installation Program: ESCON Setup
Graphical User Interface: ESCON Studio
✓ Startup Wizard
✓ Regulation Tuning
✓ Diagnostic
✓ Firmware Update
✓ Controller Monitor
✓ Parameters
✓ Data Recording
✓ Online Help
Language: German, English, French, Italian, Spanish, Japanese, Chinese
Operating System: Windows 8, Windows 7, Windows XP SP3
Communication interface: USB 2.0 (full speed)

Accessories ESCON*	36/2 DC	36/3 EC	M 50/4 EC-S	M 50/5	50/5	70/10
404404 ESCON 36/2 DC Connector Set	✓	—	—	—	—	—
425255 ESCON 36/3 EC Connector Set	—	✓	—	—	—	—
403962 DC Motor Cable	✓	—	—	—	—	—
403964 I/O Cable 7core	✓	✓	—	—	—	—
403965 I/O Cable 8core	✓	✓	—	—	—	—
275934 Encoder Cable	optional	—	—	optional	optional	optional
403957 Power Cable	✓	✓	—	—	—	—
403968 USB Type A - micro B Cable	✓	✓	✓	✓	✓	✓
418719 Adapter BLACK FPC11poles	—	✓	—	—	—	—
418723 Adapter BLUE FPC8poles	—	✓	—	—	—	—
418721 Adapter GREEN FPC8poles	—	✓	—	—	—	—
438779 ESCON Module Motherboard	—	—	—	✓	—	—
450237 ESCON Module Motherboard Sensorless	—	—	✓	—	—	—
409286 ESCON USB Stick	✓	✓	✓	✓	✓	✓

*not included in delivery

ESCON Feature Comparison Chart

	ESCON 36/2 DC	ESCON 36/3 EC
DC motors up to	72 W	
EC motors up to	–	97 W
Sensors		
	Digital Incremental Encoder (2 channel with or without Line Driver)	–
	DC Tacho	–
	Without sensor (DC motors)	–
	–	Digital Hall Sensors (EC motors)
Operating Mode		
	Current controller (torque control), Speed controller (closed and open loop)	Current controller (torque control), Speed controller (closed and open loop)
Electrical Data		
Nominal operating voltage V_{CC}	10 - 36 VDC	10 - 36 VDC
Max. output voltage	0.98 x V_{CC}	0.98 x V_{CC}
Max. output current	4 A (<60 s)	9 A (<4 s)
Continuous output current	2 A	2.7 A
Pulse width modulation frequency	53.6 kHz	53.6 kHz
Sampling rate PI current controller	53.6 kHz	53.6 kHz
Sampling rate PI speed controller	5.36 kHz	5.36 kHz
Max. efficiency	95%	95%
Max. speed (DC)	limited by max. permissible speed (motor) and max. output voltage (controller)	–
Max. speed (EC; 1 pole pair)	–	150 000 rpm
Built-in motor choke	300 µH / 2 A	3 x 47 µH / 2.7 A
Inputs/Outputs		
Hall sensor signals	–	H1, H2, H3
Encoder signals	A, A\, B, B\	–
Max. encoder input frequency differential (single-ended)	1 MHz (100 kHz)	–
Potentiometers	1	1
Digital inputs	2	2
Digital inputs/outputs	2	2
Analog inputs Resolution, Range, Circuit	2 12-bit, -10…+10 V, differential	2 12-bit, -10…+10 V, differential
Analog outputs Resolution, Range	2 12-bit, -4…+4 V	2 12-bit, -4…+4 V
Auxiliary voltage output	+5 VDC (IL ≤10 mA)	+5 VDC (IL ≤10 mA)
Hall sensor supply voltage	–	+5 VDC (IL ≤30 mA)
Encoder supply voltage	+5 VDC (IL ≤70 mA)	–
Status Indicators	Operation: green LED / Error: red LED	Operation: green LED / Error: red LED
Environmental Conditions		
Temperature – Operation	-30…+45°C	-30…+45°C
Temperature – Extended range	+45…+81°C; Derating: -0.056 A/°C	+45…+78°C; Derating: -0.082 A/°C
Temperature – Storage	-40…+85°C	-40…+85°C
Humidity (condensation not permitted)	20…80%	20…80%
Mechanical Data		
Weight	Approx. 30 g	Approx. 36 g
Dimensions (L x W x H)	55 x 40 x 16.1 mm	55 x 40 x 19.8 mm
Mounting holes	for screws M2.5	for screws M2.5
Part Numbers		
	403112 ESCON 36/2 DC	**414533** ESCON 36/3 EC
	Order accessories separately, from page 362	Order accessories separately, from page 362

ESCON Feature Comparison Chart

NEW

	ESCON Module 50/4 EC-S	ESCON Module 50/5
DC motors up to	–	250 W
EC motors up to	200 W	250 W
Sensors		
	–	Digital Incremental Encoder (2 channel with or without Line Driver)
	–	DC Tacho
	Without sensor (EC motors)	Without sensor (DC motors)
	–	Digital Hall Sensors (EC motors)
Operating Mode		
	Speed controller (closed and open loop)	Current controller (torque control), Speed controller (closed and open loop)
Electrical Data		
Nominal operating voltage V_{CC}	10 - 50 VDC	10 - 50 VDC
Max. output voltage	0.96 x V_{CC}	0.98 x V_{CC}
Max. output current	12 A (<30 s)	15 A (<20 s)
Continuous output current	4 A	5 A
Pulse width modulation frequency	53.6 kHz	53.6 kHz
Sampling rate PI current controller	–	53.6 kHz
Sampling rate PI speed controller	5.36 kHz	5.36 kHz
Max. efficiency	97%	98%
Max. speed (DC)	–	limited by max. permissible speed (motor) and max. output voltage (controller)
Max. speed (EC; 1 pole pair)	120 000 rpm	150 000 rpm
Built-in motor choke	–	–
Inputs/Outputs		
Hall sensor signals	–	H1, H2, H3
Encoder signals	–	A, A\, B, B\
Max. encoder input frequency differential (single-ended)	–	1 MHz (100 kHz)
Potentiometers	1	1
Digital inputs	2	2
Digital inputs/outputs	2	2
Analog inputs Resolution, Range, Circuit	2 12-bit, -10…+10 V, differential	2 12-bit, -10…+10 V, differential
Analog outputs Resolution, Range	2 12-bit, -4…+4 V	2 12-bit, -4…+4 V
Auxiliary voltage output	+5 VDC (IL ≤110 mA)	+5 VDC (IL ≤10 mA)
Hall sensor supply voltage	–	+5 VDC (IL ≤30 mA)
Encoder supply voltage	–	+5 VDC (IL ≤70 mA)
Status Indicators	Operation: green LED / Error: red LED	Operation: green LED / Error: red LED
Environmental Conditions		
Temperature – Operation	-30…+45°C	-30…+45°C
Temperature – Extended range	+45…+65°C; Derating -0.200 A/°C	+45…+75°C; Derating: -0.167 A/°C
Temperature – Storage	-40…+85°C	-40…+85°C
Humidity (condensation not permitted)	20…80%	20…80%
Mechanical Data		
Weight	Approx. 11 g	Approx. 12 g
Dimensions (L x W x H)	43.2 x 31.8 x 12.7 mm	43.2 x 31.8 x 12.7 mm
Mounting holes	Plugable (socket headers with 2.54 mm pitch)	Plugable (socket headers with 2.54 mm pitch)
Part Numbers		
	446925 ESCON Module 50/4 EC-S	**438725** ESCON Module 50/5
	Order accessories separately, from page 362	Order accessories separately, from page 362

ESCON Feature Comparison Chart

	ESCON 50/5	ESCON 70/10
DC motors up to	250 W	700 W
EC motors up to	250 W	700 W
Sensors		
	Digital Incremental Encoder (2 channel with or without Line Driver)	Digital Incremental Encoder (2 channel with or without Line Driver)
	DC Tacho	DC Tacho
	Without sensor (DC motors)	Without sensor (DC motors)
	Digital Hall Sensors (EC motors)	Digital Hall Sensors (EC motors)
Operating Mode		
	Current controller (torque control), Speed controller (closed and open loop)	Current controller (torque control), Speed controller (closed and open loop)
Electrical Data		
Nominal operating voltage V_{CC}	10 - 50 VDC	10 - 70 VDC
Max. output voltage	0.98 x V_{CC}	0.95 x V_{CC}
Max. output current	15 A (<20 s)	30 A (<20 s)
Continuous output current	5 A	10 A
Pulse width modulation frequency	53.6 kHz	53.6 kHz
Sampling rate PI current controller	53.6 kHz	53.6 kHz
Sampling rate PI speed controller	5.36 kHz	5.36 kHz
Max. efficiency	95%	98%
Max. speed (DC)	limited by max. permissible speed (motor) and max. output voltage (controller)	limited by max. permissible speed (motor) and max. output voltage (controller)
Max. speed (EC; 1 pole pair)	150 000 rpm	150 000 rpm
Built-in motor choke	3 x 30 µH / 5 A	3 x 15 µH / 10 A
Inputs/Outputs		
Hall sensor signals	H1, H2, H3	H1, H2, H3
Encoder signals	A, A\, B, B\	A, A\, B, B\
Max. encoder input frequency differential (single-ended)	1 MHz (100 kHz)	1 MHz (100 kHz)
Potentiometers	2	2
Digital inputs	2	2
Digital inputs/outputs	2	2
Analog inputs Resolution, Range, Circuit	2 12-bit, -10…+10 V, differential	2 12-bit, -10…+10 V, differential
Analog outputs Resolution, Range	2 12-bit, -4…+4 V	2 12-bit, -4…+4 V
Auxiliary voltage output	+5 VDC (IL ≤10 mA)	+5 VDC (IL ≤10 mA)
Hall sensor supply voltage	+5 VDC (IL ≤30 mA)	+5 VDC (IL ≤30 mA)
Encoder supply voltage	+5 VDC (IL ≤70 mA)	+5 VDC (IL ≤70 mA)
Status Indicators	Operation: green LED / Error: red LED	Operation: green LED / Error: red LED
Environmental Conditions		
Temperature – Operation	-30…+45°C	-30…+45°C
Temperature – Extended range	+45…+85°C; Derating: -0.113 A/°C	+45…+82°C; Derating: -0.270 A/°C
Temperature – Storage	-40…+85°C	-40…+85°C
Humidity (condensation not permitted)	20…80%	20…80%
Mechanical Data		
Weight	Approx. 204 g	Approx. 259 g
Dimensions (L x W x H)	115 x 75.5 x 24 mm	125 x 78.5 x 27 mm
Mounting holes	for screws M4	for screws M4
Part Numbers		
	409510 ESCON 50/5	**422969** ESCON 70/10
	Order accessories separately, from page 362	Order accessories separately, from page 362

1-Q-EC Amplifier Summary

The basic function of EC motors electronics is the electronic commutation of the motor winding. Simple speed controls are possible with Hall sensors. A further distinction is made between open or closed loop speed control.

1-Q amplifier functions in motor operation. Direction reverse via digital signal.

DEC Module 24/2 1-Q-EC Amplifier

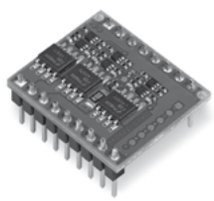

The DEC Module 24/2 (Digital EC Controller) is a 1-quadrant amplifier for controlling EC motors with Hall sensors with a maximum output of 48 watts.
Technical data page 346

Operating modes
Digital speed control or open loop speed control operation can be preset by a digital signal.

Excellent price/performance ratio
Reasonably priced 1-Q-EC amplifier optimised for OEM applications in small appliances.

OEM Module
Miniaturized open electronics board. Two connector arrays arranged in a 2.54 mm (0.1“) pattern support easy connectivity and integration into the motherboard.

Functionality
Direction of rotation preset by a digital signal. The motor shaft can be enabled or disabled. Adjustable maximum current limitation. Set value speed input through external analog voltage. Status indicator with “Ready”-Output.

Protection circuit
The power amplifier is protected against thermal overload and the control inputs against overvoltage.

DEC Module 24/2

Connections	
Male header	8 + 9 = 17 poles
Pitch	2.54 mm
DEC Module 24/2	**367661**

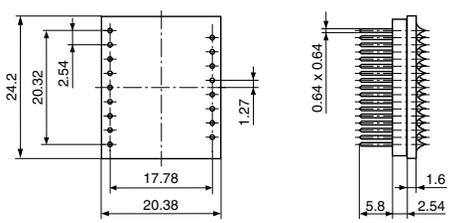

Dimensions in [mm]

DEC Module 50/5 1-Q-EC Amplifier

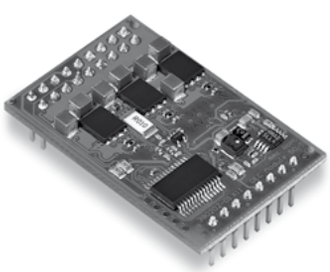

The DEC Module 50/5 (Digital EC Controller) is a 1-quadrant amplifier for controlling EC motors with Hall sensors with a maximum output of 250 watts.
Technical data page 346

Operating modes
Digital speed control or open loop speed control operation can be preset by a digital signal.

Excellent price/performance ratio
Reasonably priced 1-Q-EC amplifier optimised for OEM applications in small appliances.

OEM Module
Miniaturized open electronics board. Connector arrays arranged in a 2.54 mm (0.1“) pattern support easy connectivity and integration into the motherboard.

Functionality
Direction of rotation preset by a digital signal. The motor shaft can be enabled or disabled. Adjustable maximum current limitation. Set value speed input through external analog voltage. Speed can be monitored through the speed monitor output. Status indicator with “Ready”-Output.

Protection circuit
The power amplifier is protected against thermal overload and the control inputs against overvoltage.

DEC Module 50/5

Connections	
Male header 1	2 rows, 2 x 9 poles
Male header 2	1 row, 8 poles
Pitch	2.54 mm
DEC Module 50/5	**380200**

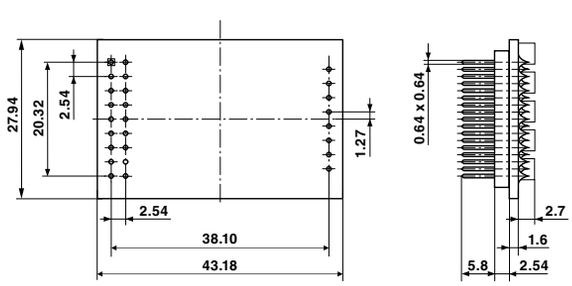

Dimensions in [mm]

1-Q-EC Amplifier Data

DEC Module 24/2 1-Q-EC Amplifier
1-quadrant amplifier for controlling EC motors with Hall sensors with a maximum output of 48 watts.

DEC Module 50/5 1-Q-EC Amplifier
1-quadrant amplifier for controlling EC motors with Hall sensors with a maximum output of 250 watts.

Operating modes		
	Speed Controller (closed and open loop)	**Speed Controller (closed and open loop)**
Electrical Data		
Operating voltage V_{CC}	8 - 24 VDC (optional 5.0 VDC)	6 - 50 VDC (optional 5.0 VDC)
Max. output voltage	V_{CC}	0.95 x V_{CC}
Max. output current I_{max}	3 A	10 A
Continuous output current I_{cont}	2 A	5 A
Switching frequency of power stage	46.8 kHz	46.8 kHz
Band width current controller		
Max. speed (1 pole pair)	80 000 rpm	80 000 rpm
Built-in motor choke per phase		
Input		
Set value	“Speed” 0…+5 V (1024 steps)	“Speed” 0…+5 V (1024 steps)
Current limit	“Current Limit” external resistor against GND	“Current Limit” external resistor against GND
Enable	“Enable” +2.4…24 V	“Enable” +2.4…50 V
Direction	“Direction” +2.4…24 V	“Direction” +2.4…50 V
Stop / Brake		
Configurable		
Output		
Monitor		“Monitor n”, digital, (5 V)
Status reading “Ready”	“Ready”, digital, (5 V)	“Ready”, digital, (5 V)
Voltage outputs		
Hall sensors supply voltage V_{CC} Hall	+5 VDC, max. 35 mA	+5 VDC, max. 35 mA
Auxiliary voltages		
Possible adjustments	Input “Mode 0” and “Mode 1”	Input “Mode 0” and “Mode 1”
Trim potentiometer		
Indicator		
Protective functions		
Blockage protection	Motor current limitation if motor shaft is blocked for longer than 1.5 s	Motor current limitation if motor shaft is blocked for longer than 1.5 s
Thermal protection of power stage	T > 95°C	T > 100°C
Dynamic current limit		
Under- / Overvoltage protection	Switches off when V_{CC} < 6.5 V or V_{CC} > 30 V	Switches off when V_{CC} < 6 V or V_{CC} > 56 V
Ambient temperature and humidity range		
Operation	-10…+45°C	-10…+45°C
Storage	-40…+85°C	-40…+85°C
No condensation	20…80%	20…80%
Mechanical Data		
Weight	Approx. 4 g	Approx. 9 g
Dimensions (L x W x H)	24.2 x 20.38 x 12.7 mm (see page 345)	43.18 x 27.94 x 12.7 mm (see page 345)
Mounting threads	mountable on socket terminal strips pitch 2.54 mm	mountable on socket terminal strips pitch 2.54 mm
Connections	See page 345	See page 345
Part Numbers		
	367661 DEC Module 24/2 1-Q-EC Amplifier	**380200** DEC Module 50/5 1-Q-EC Amplifier

Accessories		
	370652 DEC Module Eva-Board	**370652** DEC Module Eva-Board

EPOS2 Positioning Controllers Summary

Online commanded

EPOS2 24/2
- Several device variations allows the operation of various maxon DC and EC micromotors up to 48 watts
- Point to point control (1 axis)
- Interpolated Position Mode (PVT)
- Combination of several drives via CAN Bus
- CANopen
- 6 digital inputs
- 2 digital outputs
- 2 analog inputs
- Miniaturized design

Details pages 348–350

Slave version (online commanded) using CAN Master (EPOS2 P, PC, PLC, SoftPLC, etc.) or PC via USB or RS232 interface

Typical applications:
- Small apparatus/appliances
- System automation tasks
- Drive technology

Part Numbers

EPOS2 24/2	**380264, 390003 390438**

Online commanded

EPOS2 Module 36/2
- DC and EC motors up to 72 W
- Point to point control unit (1 axis)
- Interpolated Position Mode (PVT)
- Combination of several drives via CAN Bus
- CANopen
- 6 digital inputs
- 3 digital outputs
- 2 analog inputs
- Miniaturized open electronics board (OEM)

Details pages 348–350

Slave version (online commanding) using CAN Master (EPOS2 P, PC, PLC, SoftPLC, µ-Processor, etc.) or PC via USB *) or RS232 interface

*) requires external transceiver

Typical applications:
- Small apparatus/appliances
- System automation tasks
- OEM customers

Part Number

EPOS2 Module 36/2	**360665**

Online commanded

EPOS2 24/5
- DC and EC motors up to 120 W
- Point to point control unit (1 axis)
- Interpolated Position Mode (PVT)
- Combination of several drives via CAN Bus
- CANopen
- 6 digital inputs
- 4 digital outputs
- 2 analog inputs
- Compact design

Details pages 348–351

Slave version (online commanding) using CAN Master (EPOS2 P, PC, PLC, SoftPLC, etc.) or PC via USB or RS232 interface

Typical applications:
- Tool building
- Production equipment
- System automation tasks

Part Number

EPOS2 24/5	**367676**

Online commanded

EPOS2 50/5
- DC and EC motors up to 250 W
- Point to point control unit (1 axis)
- Interpolated Position Mode (PVT)
- Combination of several drives via CAN Bus
- CANopen
- 11 digital inputs
- 5 digital outputs
- 2 analog inputs
- 1 analog output
- Compact design

Details pages 348–351

Slave version (online commanding) using CAN Master (EPOS2 P, PC, PLC, SoftPLC, etc.) or PC via USB or RS232 interface

Typical applications:
- Tool building
- Production equipment
- System automation tasks

Part Number

EPOS2 50/5	**347717**

Online commanded

EPOS2 70/10
- DC and EC motors up to 700 W
- Point to point control unit (1 axis)
- Interpolated Position Mode (PVT)
- Combination of several drives via CAN Bus
- CANopen
- 10 digital inputs
- 5 digital outputs
- 2 analog inputs
- Robust design

Details pages 348–351

Slave version (online commanding) using CAN Master (EPOS2 P, PC, PLC, SoftPLC, etc.) or PC via USB or RS232 interface

Typical applications:
- Production equipment
- System automation tasks
- Plant construction

Part Number

EPOS2 70/10	**375711**

EPOS2 Positioning Controllers

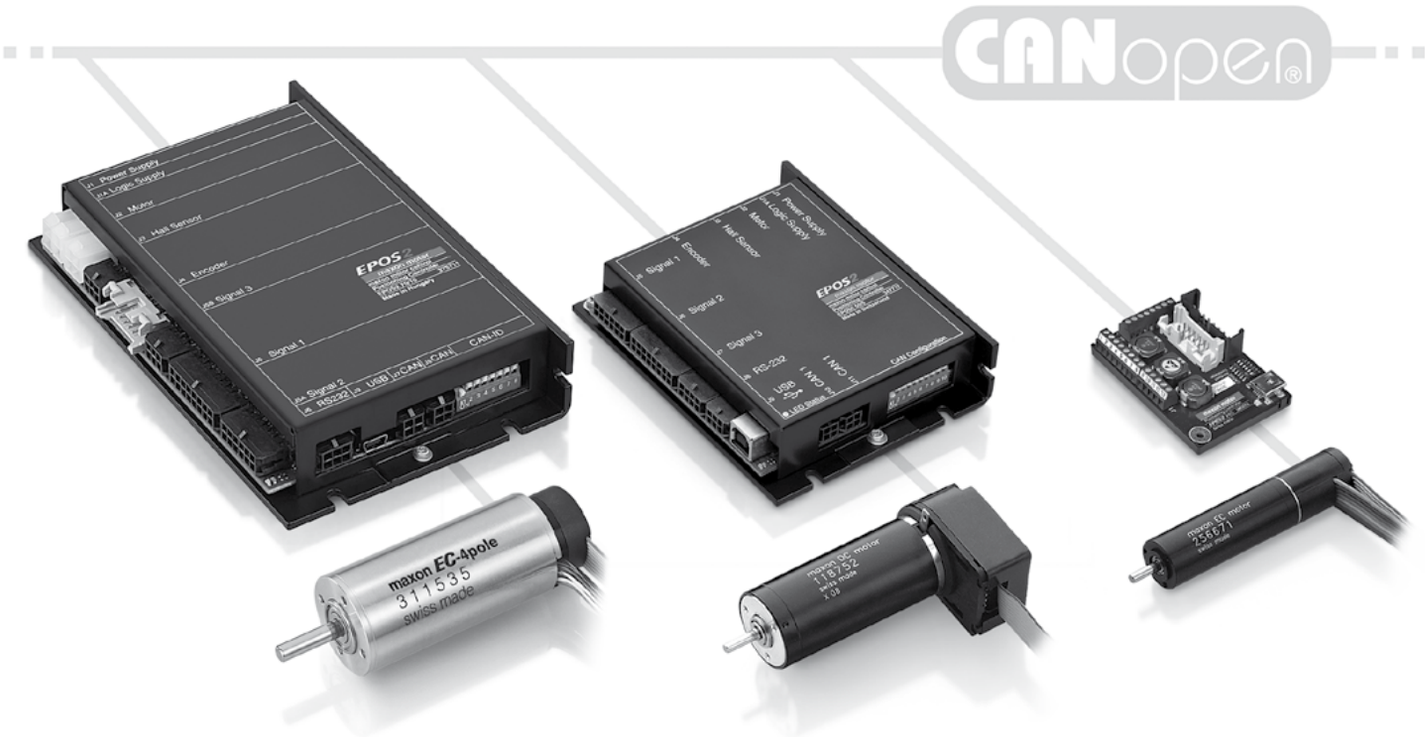

CANopen Slave (online commanded)

Single motion and I/O commands from the process control are transmitted to the positioning control unit by a superior system (Master). For that purpose product specific commands are available.

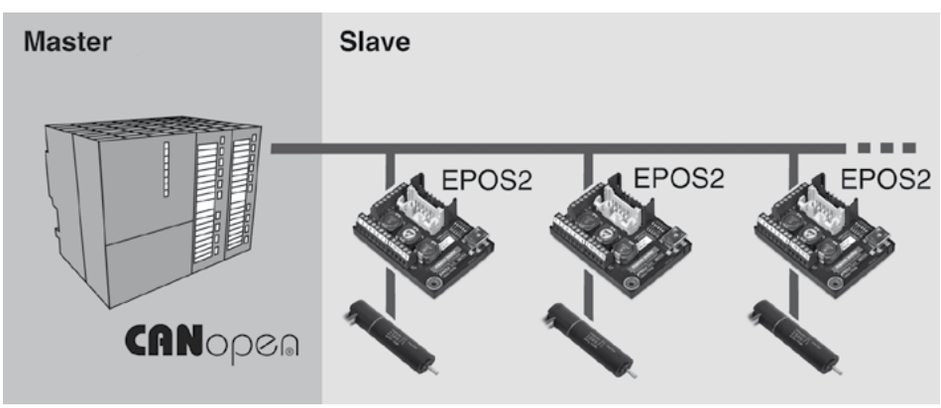

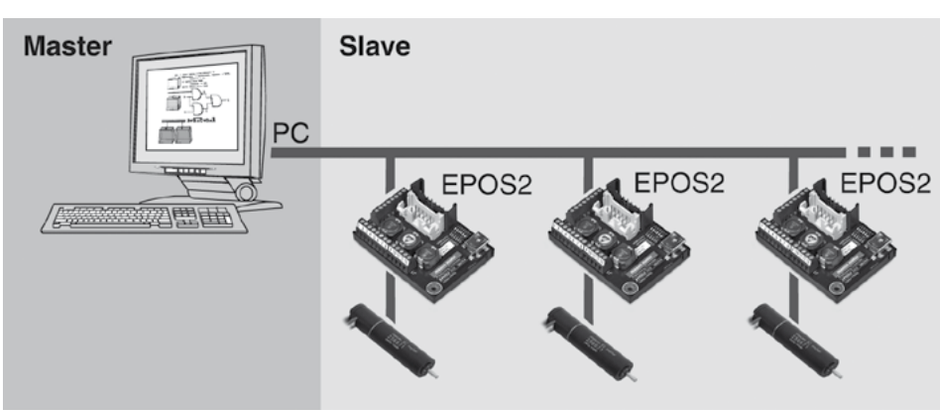

EPOS2 is a modular constructed digital positioning controller. It is suitable for DC and EC motors with incremental encoder with a power range from 1 to 700 watts.
A number of operating modes provides flexible application in a wide range of drive systems in automation technology and mechatronics.

Point to point
The “CANopen Profile Position Mode” moves the position of the motor axis from point A to point B. Positioning is in relation to the axis Home position (absolute) or the actual axis position (relative).

Interpolated Position Mode (PVT)
Thanks to Interpolated Position Mode, the EPOS2 is able to synchronously run a path specified by interpolating points. With a suitable master, coordinated multi-axis movements as well as any profile in a 1-axis system can be carried out. (PVT = Position and Velocity versus Time)

Position and Speed control with Feed Forward
The combination of feedback and feed forward control provides ideal motion behavior. Feed forward control reduces control error. EPOS2 supports feed forward acceleration and speed control.

Speed control
In “CANopen Profile Velocity Mode”, the motor axis is moved with a set speed. The motor axis retains speed until a new speed is set.

Torque control
In “Current Mode”, a controlled torque can be produced on the motor shaft. The sinusoidal commutation used produces minimum torque ripple.

Homing
The “CANopen Homing Mode” is for referencing to a special mechanical position. There are more than 30 methods available for finding the reference position.

Electronic gearhead
In “Master Encoder Mode”, the motor follows a reference input produced by an external encoder. A gearing factor can also be defined using software parameters. Two motors can be very easily synchronized using this method.

Step/Direction
In “Step/Direction Mode” the motor axis follows a digital signal step-by-step. This mode can replace stepper motors. It can also be used to control the EPOS2 by a PLC without CAN interface.

Analog Commands
In the position, speed and current mode it is possible to give commands via an external analog set value. This function offers further possibilities to operate the EPOS2 without serial on-line commanding.

Capture inputs (Position Marker)
Digital inputs can be configured so that the actual position value is saved when a positive and/or negative edge of an input appears.

Trigger output (Position Compare)
Digital outputs can be configured so that a digital signal is emitted at a set position value.

Dual Loop Position and Speed Control
With an additional sensor the load can be controlled directly and with high precision; the motor control is subordinated. The mechanical backlash and the elasticity can be compensated. Wide range of sensors can be handled: digital incremental encoder, SSI absolute encoder, analog incremental encoder (sin/cos). (Only in use with EPOS2 50/5 and EPOS2 70/10.)

Control of Holding Brakes
The control of the holding brake can be implemented in the device state management. There the delay times can be individually configured for switching on and off.

Additional information for technical data of page 350/351

Standardized, extendable
CANopen standard CiA DS-301, DSP-402 and DSP-305. Can easily be integrated into existing CANopen systems. Networks with other CANopen modules. Alternatively controllable by serial interface (USB and RS232).

Flexible, modular
The same technology for DC and EC motors. Configurable inputs and outputs for limit switches, reference switches, brakes and for other sensors and indicators near the drive.

Easy start-up procedure
Graphic user interface with many functions and wizards for start-up procedure, automatic control settings, I/O configuration, tests.

Easy programming
Numerous IEC 61131-3 libraries free available for CAN-Master units of several PLC manufacturers providers (Beckhoff, Siemens/Helmholz, VIPA) and 32-/64-bit Windows-DLLs for PC Master (IXXAT, Vector and National Instruments). Various programming examples free available for MS Visual C#, MS Visual C++, MS Visual Basic, Borland C++, Borland Delphi, National Instruments LabVIEW and National Instruments LabWindows/CVI.
Also available is the 32-bit Linux Shared Object Library with the programming example for Eclipse C++/QT. In addition, the integration of the EPOS2 into the National Instruments Compact Rio System is easy to handle thanks to the available maxon library for NI SoftMotion.

State-of-the-art
Digital position, speed and current/torque control. Sinusoidal commutation for smooth operation of EC motors.

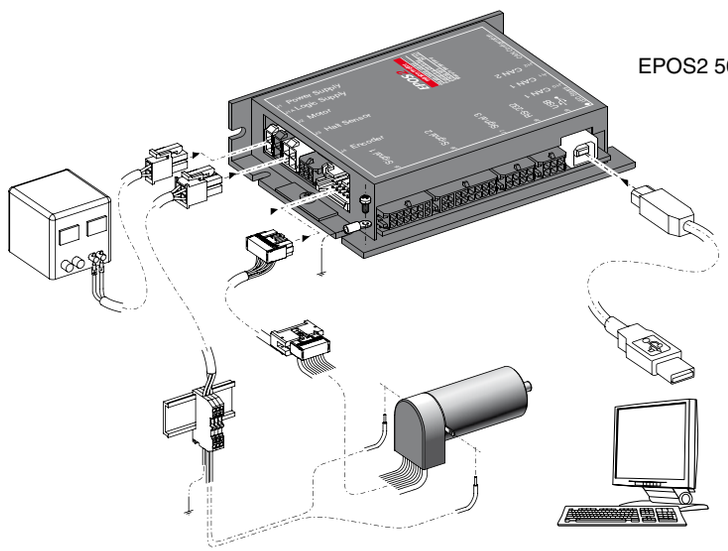

EPOS2 50/5

Operating modes
CANopen Profile Position-, Profile Velocity- and Homing Mode
Position, Velocity and Current Mode
Alternative set value setting via Step/Direction, Master Encoder or external analog commanding
Path generating with trapezoidal or sinusoidal profiles
Feed forward for velocity and acceleration
Interpolated Position Mode (PVT)
Sinusoidal or block commutation for EC motors
Dual loop position and speed controller
Communication
Communication via CANopen and/or USB 2.0 and/or RS232
Gateway function USB-to-CAN and RS232-to-CAN

Inputs/Outputs
Free configurable digital inputs e.g. for limit switches and reference switches
Free configurable digital outputs e.g. for holding brakes
Free analog inputs
Available software
EPOS Studio
Windows DLL
IEC 61131-3 Libraries
Firmware
Available documentation
Feature Chart
Getting Started
Cable Starting Set
Hardware Reference
Firmware Specification
Communication Guide
Application Notes
Cable
A comprehensive range of cables is available as an option. Details can be found on page 362.

EPOS2 Positioning Controllers Data

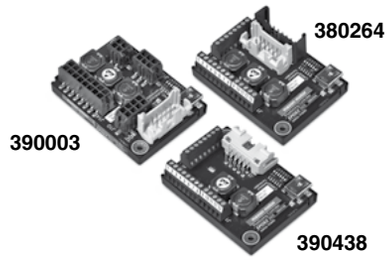

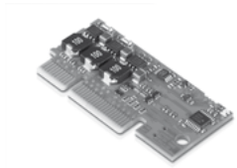

EPOS2 24/2
Matched with DC brush motors with encoder or brushless EC motors with Hall sensors and encoder up to 48 watts.

EPOS2 Module 36/2
The EPOS2 is an OEM positioning controller plug-in module for brushed DC motors with encoder or brushless EC motors with Hall sensors and encoder up to 72 watts.

Controller versions		
	CANopen Slave	**CANopen Slave**
Electrical Data		
Operating voltage V_{CC}	9 - 24 VDC	11 - 36 VDC (optional 0 - 36 VDC)
Logic supply voltage V_C (optional)		11 - 36 VDC (optional 5.0 VDC)
Max. output voltage	0.9 x V_{CC}	0.9 x V_{CC}
Max. output current I_{max} (<1 s)	4 A	4 A
Continuous output current I_{cont}	2 A	2 A
Switching frequency of power stage	100 kHz	50 kHz
Sample rate of PI - current controller	10 kHz	10 kHz
Sample rate of PI - speed controller	1 kHz	1 kHz
Sample rate of PID - positioning control	1 kHz	1 kHz
Max. speed (1 pole pair)	25 000 rpm (sinusoidal); 100 000 rpm (block)	25 000 rpm (sinusoidal); 100 000 rpm (block)
Built-in motor choke per phase	47 µH / 2 A	10 µH / 2 A
Input		
Hall sensor signals	H1, H2, H3	H1, H2, H3
Encoder signals	A, A\, B, B\, I, I\ (max. 5 MHz)	A, A\, B, B\, I, I\ (max. 5 MHz)
Digital inputs	6 (TTL level)	6 (TTL level)
Analog inputs	2 12-bit resolution, 0…+5 V	2 11-bit resolution, 0…+5 V
CAN-ID (CAN node identification)	configurable with DIP switch 1…4	set by external wiring
Output		
Digital outputs	2	3
Analog outputs		
Encoder voltage output	+5 VDC, max. 100 mA	+5 VDC, max. 100 mA
Hall sensor voltage output	+5 VDC, max. 30 mA	+5 VDC, max. 30 mA
Auxiliary voltage output	+5 VDC, max. 10 mA	
Interface		
RS232	RxD; TxD (max. 115 200 bit/s)	RxD; TxD (max. 115 200 bit/s)
CAN	high; low (max. 1 Mbit/s)	high; low (max. 1 Mbit/s)
USB 2.0	Data+; Data- (max. 12 Mbit/s)	external USB transceiver required
Indicator		
LED green = READY, red = ERROR	green LED, red LED	green LED, red LED
Ambient temperature and humidity range		
Operation	-10…+45°C	-10…+45°C
Storage	-40…+85°C	-40…+85°C
No condensation	20…80%	20…80%
Mechanical data		
Weight	Approx. 30 g	Approx. 10 g
Dimensions (L x W x H)	55 x 40 x 19.6 mm	54.5 x 28.2 x 9 mm
Mounting threads	Flange for M2.5-screws	PCB edge connector with locking mechanism
Part Numbers		
	390438 EPOS2 24/2 for DC motors **380264** EPOS2 24/2 for EC motors **390003** EPOS2 24/2 for DC/EC motors	**360665** EPOS2 Module 36/2
Accessories		
	309687 DSR 50/5 Shunt regulator	**363407** EPOS2 Module Starter-Kit
	Order accessories separately, see page 362	Order accessories separately, see page 362

EPOS2 24/5
Matched with DC brush motors with encoder or brushless EC motors with Hall sensors and encoder, from 5 to 120 watts.

EPOS2 50/5
Matched with DC brush motors with encoder or brushless EC motors with Hall sensors and encoder, from 5 to 250 watts.

EPOS2 70/10
Matched with DC brush motors with encoder or brushless EC motors with Hall sensors or encoder, from 80 to 700 watts.

Controller versions		
CANopen Slave	**CANopen Slave**	**CANopen Slave**
Electrical Data		
11 - 24 VDC	11 - 50 VDC	11 - 70 VDC
11 - 24 VDC	11 - 50 VDC	11 - 70 VDC
0.9 x V_{CC}	0.9 x V_{CC}	0.9 x V_{CC}
10 A	10 A	25 A
5 A	5 A	10 A
50 kHz	50 kHz	50 kHz
10 kHz	10 kHz	10 kHz
1 kHz	1 kHz	1 kHz
1 kHz	1 kHz	1 kHz
25 000 rpm (sinusoidal); 100 000 rpm (block)	25 000 rpm (sinusoidal); 100 000 rpm (block)	25 000 rpm (sinusoidal); 100 000 rpm (block)
15 µH / 5 A	22 µH / 5 A	25 µH / 10 A
Input		
H1, H2, H3	H1, H2, H3	H1, H2, H3
A, A\, B, B\, I, I\ (max. 5 MHz)	A, A\, B, B\, I, I\ (max. 5 MHz)	A, A\, B, B\, I, I\ (max. 5 MHz)
6 (TTL and PLC level)	11 (7 optically isolated, 4 differential)	10 (7 optically isolated, 3 differential)
2 12-bit resolution, 0…+5 V	2 (differential) 12-bit resolution, ±10 V	2 (differential) 12-bit resolution, 0…+5 V
configurable with DIP switch 1…7	configurable with DIP switch 1…7	configurable with DIP switch 1…7
Output		
4	5 (4 optically isolated, 1 differential)	5 (4 optically isolated, 1 differential)
	1 (12-bit, 0…10 V)	
+5 VDC, max 100 mA	+5 VDC, max. 100 mA	+5 VDC, max. 100 mA
+5 VDC, max. 30 mA	+5 VDC, max. 30 mA	+5 VDC, max. 30 mA
V_{CC}, max. 1300 mA	+5 VDC, max. 150 mA	+5 VDC, max. 150 mA; +5 VDC (R_i = 1 kΩ)
Interface		
RxD; TxD (max. 115 200 bit/s)	RxD; TxD (max. 115 200 bit/s)	RxD; TxD (max. 115 200 bit/s)
high; low (max. 1 Mbit/s)	high; low (max. 1 Mbit/s)	high; low (max. 1 Mbit/s)
Data+; Data- (max. 12 Mbit/s)	Data+; Data- (max. 12 Mbit/s)	Data+; Data- (max.12 Mbit/s)
Indicator		
green LED, red LED	green LED, red LED	green LED, red LED
Ambient temperature and humidity range		
-10…+45°C	-10…+45°C	-10…+45°C
-40…+85°C	-40…+85°C	-40…+85°C
20…80%	20…80%	20…80%
Mechanical data		
Approx. 170 g	Approx. 240 g	Approx. 330 g
105 x 83 x 24 mm	120 x 93.5 x 27 mm	150 x 93 x 27 mm
Flange for M3-screws	Flange for M3-screws	Flange for M3-screws
Part Numbers		
367676 EPOS2 24/5	**347717** EPOS2 50/5	**375711** EPOS2 70/10

Accessories		
309687 DSR 50/5 Shunt regulator	**309687** DSR 50/5 Shunt regulator	**235811** DSR 70/30 Shunt regulator
Order accessories separately, see page 362	Order accessories separately, see page 362	Order accessories separately, see page 362

EPOS2 P Programmable Positioning Controller Summary

Standalone operation

EPOS2 P 24/5 (programmable)
- IEC 61131-3 programmable
- CANopen Master function
- Multiple axis systems via CAN Bus CANopen
- Point to point control unit (1 axis)
- Interpolated Position Mode (PVT)
- DC and EC motors up to 120 W
- 6 digital inputs (TTL and PLC level)
- 4 digital outputs
- 2 analog inputs (12-bit ADC)
- Compact design

Details page 354

Standalone operation, programmable from PC via RS232 or USB 2.0 with standard IEC 61131-3. Program languages (ST, IL, FBD, LD, SFC). CANopen master function for controlling other axes. Standard motion control library. Supervisory Control and Data Acquistion for monitoring and controlling a process via RS232; USB 2.0 or CANopen.

Typical applications:
- Work equipment manufacturing
- Tool building
- System automation tasks

Part Number
EPOS2 P 24/5 **378308**

EPOS2 P is a freely programmable positioning controller with an integrated power stage, based on the EPOS2 slave version. It is suitable for brushless and brush DC motors with incremental encoder and up to 120 watt output.

Standalone drive systems
With self-compiled programs, the standalone version of EPOS2 can autonomously control single and multiple axis systems dispensing with the need for a superior intelligent control unit.

Via the CAN Bus all axes can be coordinated simultaneously. The combination with maxon motors produces drive systems for highly dynamic movements.

Standalone

Single Axis System

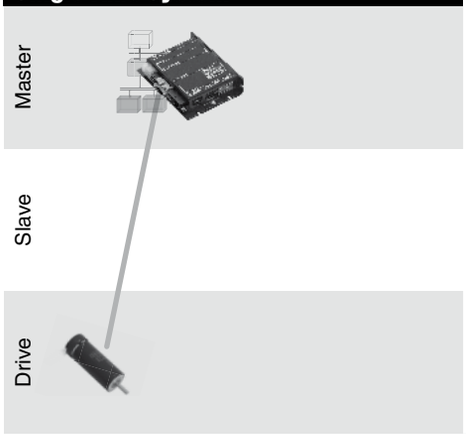

Multi Axis System

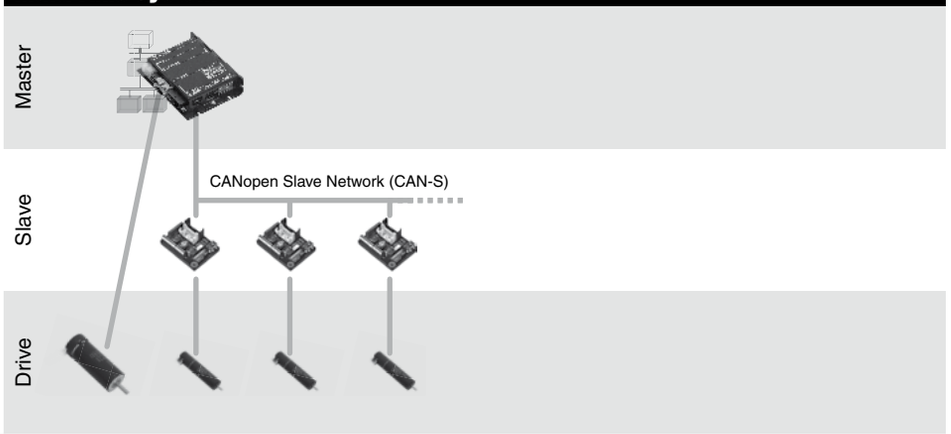

Supervisory Control

Single Standalone System

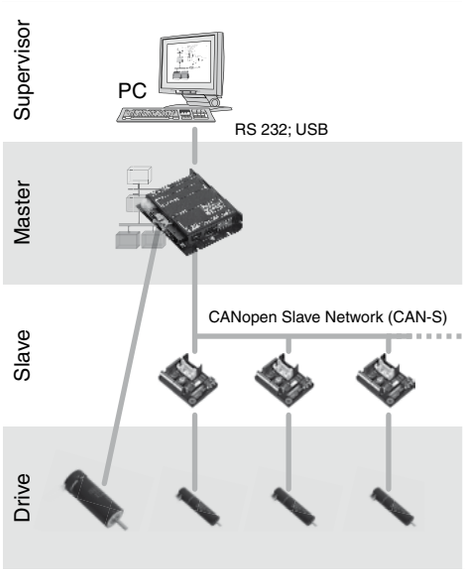

Multi Standalone System

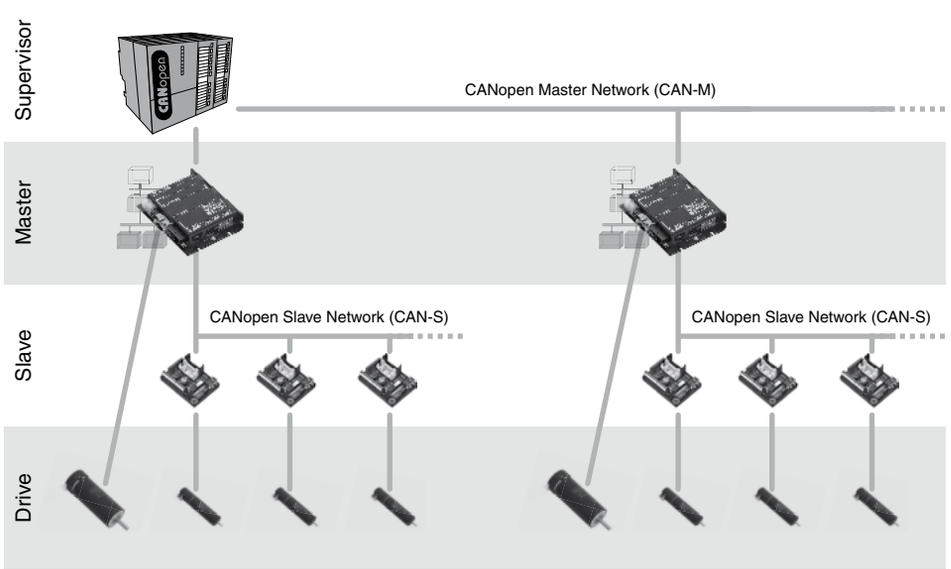

Technology
The programming of applications complies with IEC 61131-3 standard. A non-volatile flash memory is used for saving. The three-stage code optimization produces IEC 61131-3 programs adjusted for the application's needs; optimized by memory, performance or a combination of both.

EPOS Studio – programming according to IEC 61131-3
Editors (ST, IL, FBD, LD, SFC) of the powerful "EPOS Studio" tool are available for programming according to IEC 61131-3. The integrated project browser shows all network resources. Complex programs with a large number of decentralized controls can be optimally managed with it. Drive systems are configured and networked quickly using intelligent step-by-step wizards.

Motion control library
The complexity and development costs of drive systems are substantially reduced. The Motion Firmware Library was implemented according to the widly-used Motion Control Standard. Standardized function blocks make implementation easy.

maxon utility library
Thanks to the additional maxon user library, the programming of recurring motion control tasks is simplified. By means of the "Best Practice" programs and the numerous applications examples, purposeful IEC 61131-3 application programs can be compiled.

Technical data page 354

Performance features

- 32 bit host processor, 60 MHz
- 1 MB memory, with 768 KB free user program memory
- typicaly 2.5 ms / 5000 lines IL
- 4 KB non-volatile memory
- Digital motion control signal processor

Software features

- Windows-based development environment
- IEC 61131-3 programming languages (ST, IL, FBD, LD, SFC)
- IEC 61131-3 standard libraries
- Motion control function blocks
- maxon utility function block library
- CANopen function block library
- User libraries
- Network variables and data exchange
- Online debugger with break points and watch variables
- Axis configuration and parameterization
- Online help

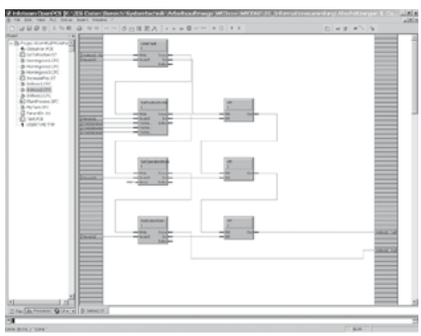

FBD Editor

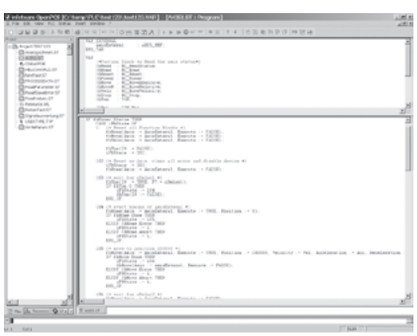

ST Editor

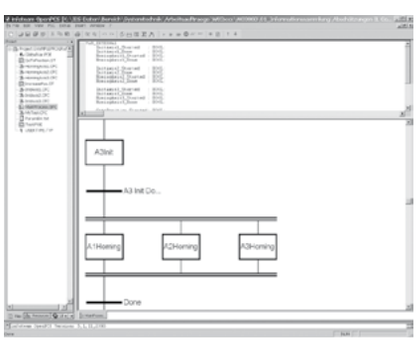

SFC Editor

Motion firmware library

- Drive control
- Referencing (Homing)
- Speed control
- Positioning absolute and relative
- Error Management
- Parameter Handling

Motion utility library

- Inputs and Outputs
- Error Handling
- Object Dictionary Access
- Homing Parameter
- Data Handling

EPOS2 P Programmable Positioning Controller Data

CANopen USB RS232 GUI

EPOS2 P 24/5
Matched with DC brush motors with encoder or brushless EC motors with Hall sensors and encoder, from 5 to 120 watts.

Controller versions	
	CANopen Master (programmable)
Electrical Data	
Operating voltage V_{CC}	11 - 24 VDC
Logic supply voltage V_C (optional)	11 - 24 VDC
Max. output voltage	0.9 x V_{CC}
Max. output current I_{max} (<1 s)	10 A
Continuous output current I_{cont}	5 A
Switching frequency of power stage	50 kHz
Sample rate of PI - current controller	10 kHz
Sample rate of PI - speed controller	1 kHz
Sample rate of PID - positioning control	1 kHz
Max. speed (1 pole pair)	25 000 rpm (sinusoidal); 100 000 rpm (block)
Built-in motor choke per phase	15 µH / 5 A
Input	
Hall sensor signals	H1, H2, H3
Encoder signals	A, A\, B, B\, I, I\ (max. 5 MHz)
Digital inputs	6 (TTL and PLC level)
Analog inputs	2 12-bit resolution, 0…+5 V
CAN-ID (CAN node identification)	Configurable with DIP switch 1…7
Output	
Digital outputs	4
Encoder voltage output	+5 VDC, max. 100 mA
Hall sensor voltage output	+5 VDC, max. 30 mA
Auxiliary voltage output	V_{CC}, max. 1300 mA
Interface	
RS232	RxD; TxD (max. 115 200 bit/s)
CAN	high; low (max. 1 Mbit/s)
USB 2.0	Data+; Data- (max.12 Mbit/s)
Indicator	
Operating/Error/Program	green LED, red LED, blue LED
Ambient temperature and humidity range	
Operation	-10…+45°C
Storage	-40…+85°C
No condensation	20…80%
Mechanical Data	
Weight	Approx. 180 g
Dimensions (L x W x H)	105 x 83 x 24 mm
Mounting threads	Flange for M3-screws
Part Numbers	
	378308 EPOS2 P 24/5
Accessories	
	309687 DSR 50/5 Shunt regulator
	Order accessories separately, see page 362

Additional information

Operating modes
CANopen Profile Position, Profile Velocity- and Homing Mode
Position, Velocity and Current Mode
Path generating with trapezoidal or sinusoidal profiles
Feed forward for velocity and acceleration
Interpolated Position Mode (PVT)
Sinusoidal or block commutation for EC motors
Communication
Programming interface (Windows) via USB 2.0 or RS232
Communication via CANopen, RS232 or USB 2.0 maxon protocol
Inputs / Outputs
Free configurable digital inputs e.g. for limit switches and reference switches
Free configurable digital outputs e.g. for holding brakes
Free analog inputs
Available software
EPOS Studio programming according to IEC 61131-3
IEC 61131-3 standard libraries
motion control library
maxon utility function block library
CANopen function block library
maxon utility library
Application Examples
Best Practice Examples
Firmware
Available documentation
Getting Started
Cable Starting Set
Hardware Reference
Firmware Specification
Programming Reference
Application Notes
Cable
A comprehensive range of cables is available as an option. Details can be found on page 362.

EPOS3 Positioning Controller Summary

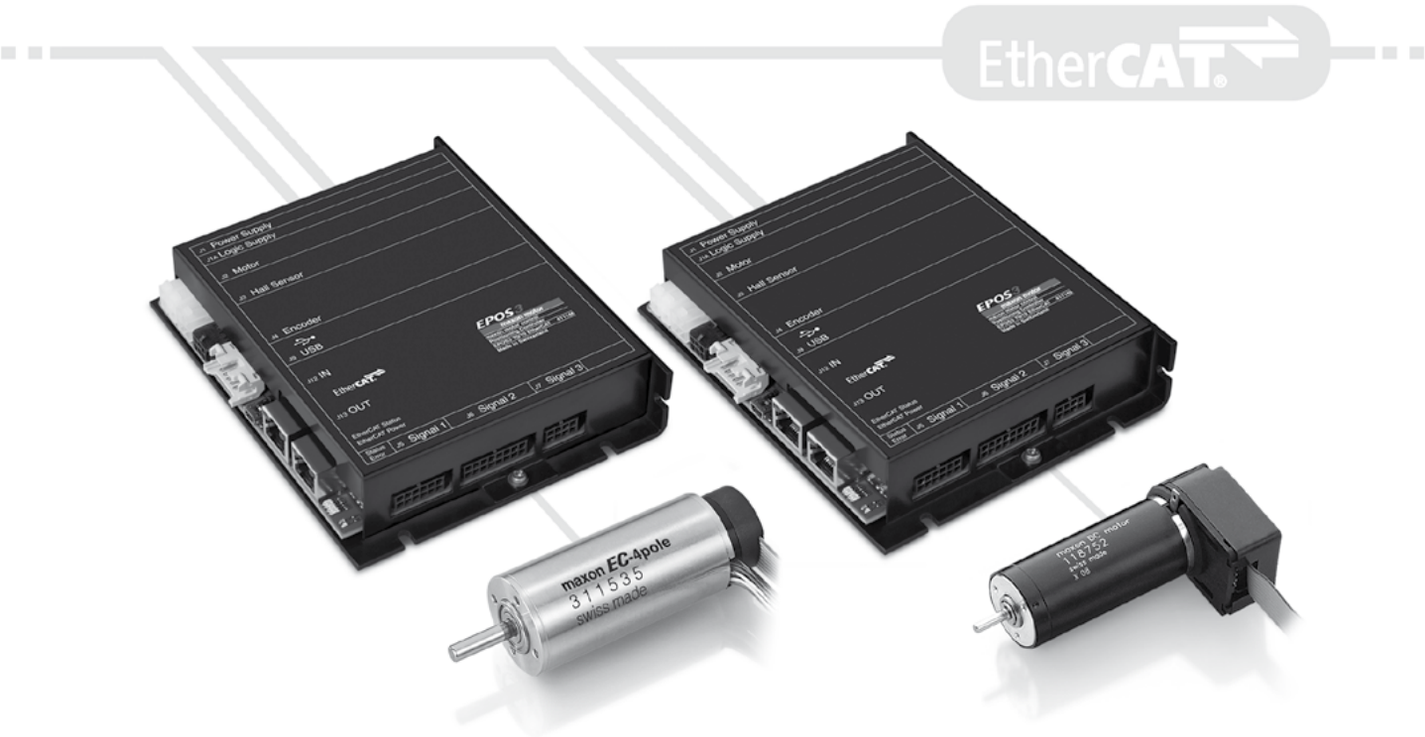

EPOS3 70/10 EtherCAT Slave

The EPOS3 70/10 EtherCAT positioning controller receives motion and I/O commands from a superordinate EtherCAT-Master, which operates as sequence control system. The EPOS3 70/10 EtherCAT supports CoE (CAN application layer over EtherCAT).

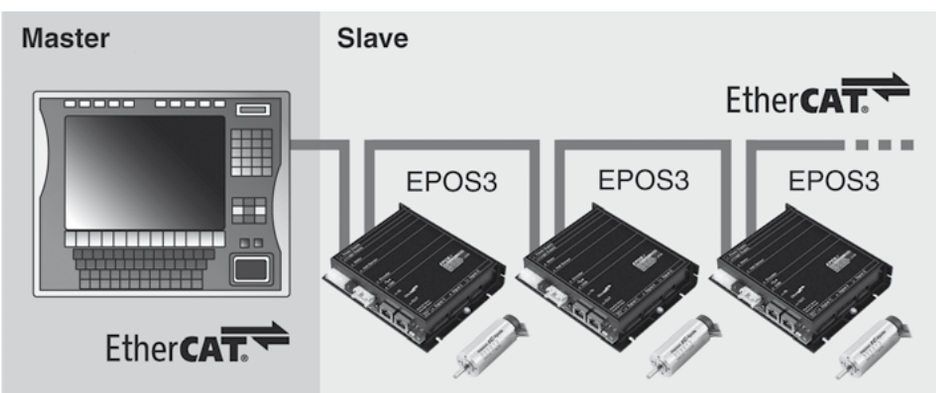

The EPOS3 70/10 EtherCAT is a modular, digital positioning controller and suits DC and EC motors with incremental encoder in the range up to 700 Watt.
A wide range of operating modes allows flexible use in a variety of fields in drive systems, automation, and mechatronics.

Cyclic Synchronous Position (CSP)
The EtherCAT master executes the path planning and sends the target position cyclically and synchronously via the EtherCAT network to the EPOS3.
The position control loop runs in the EPOS3.
The EPOS3 delivers the measured actual position, speed and current values to the EtherCAT master.

Cyclic Synchronous Velocity (CSV)
The EtherCAT master executes the path planning and sends the target speed cyclically and synchronously via the EtherCAT network to the EPOS3. The speed control loop runs in the EPOS3. The EPOS3 delivers the measured actual position, speed and current values to the EtherCAT master. If the PI position control loop is closed via the EtherCAT master, CSV mode is often used.

Cyclic Synchronous Torque (CST)
The EtherCAT master executes the path planning and sends the target torque cyclically and synchronously via the EtherCAT network to the EPOS3. The torque (current) control loop runs in the EPOS3. The EPOS3 delivers the measured actual position, speed and current values to the EtherCAT master. If the PID position control loop is closed via the EtherCAT master, CST mode is often used.

Point to point
The “Profile Position Mode” moves the position of the motor axis from point A to point B. Positioning is in relation to the axis Home position (absolute) or the actual axis position (relative).

Interpolated Position Mode (PVT)
Thanks to Interpolated Position Mode, the EPOS3 is able to synchronously run a path specified by interpolating points. With a suitable master, coordinated multi-axis movements as well as any profile in a 1-axis system can be carried out. (PVT = Position and Velocity versus Time.)

Position and Speed control with Feed Forward
The combination of feedback and feed forward control provides ideal motion behavior. Feed forward control reduces control error. EPOS3 supports feed forward for acceleration and speed.

Speed control
In “Profile Velocity Mode”, the motor axis is moved with a set speed. The motor axis retains speed until a new speed is set.

Homing
The “Homing Mode” is for referencing to a special mechanical position. There are more than 30 methods available for finding the reference position.

Capture inputs (Position Marker)
Digital inputs can be configured so that the actual position value is saved when a positive and/or negative edge of an input appears.

Trigger output (Position Compare)
Digital outputs can be configured so that a digital signal is emitted at a set position value.

Dual Loop Position and Speed Control
With an additional sensor the load can be controlled directly and with high precision; the motor control is subordinated. The mechanical backlash and the elasticity can be compensated. Wide range of sensors can be handled: digital incremental encoder, SSI absolute encoder, analog incremental encoder (sin/cos).

Control of Holding Brakes
Control of the holding brake can be integrated in the device status management. Thereby the delay times can be individually configured for switching on and off.

Additional information for technical data of page 357

Standardized
EtherCAT Slave: CoE (CAN application layer over EtherCAT) according to CANopen standard DSP-402 Device Profile Drives and Motion Control. Easy integration into existing EtherCAT systems. Can be networked with additional EtherCAT units. Alternatively configurable via serial interface (USB 2.0).

Flexible, modular
The same technology for DC and EC motors. Configurable inputs and outputs for limit switches, reference switches, brakes and for other sensors and indicators near the drive.

Easy start-up procedure
Graphic user interface with many functions and wizards for start-up procedure, automatic control settings, I/O configuration, tests.

EtherCAT Master (Beckhoff TwinCAT®): Integration made easy
Easy integration of the position controller EPOS3 70/10 EtherCAT into the Beckhoff-TwinCAT SoftPLC thanks to existing device description file (ESI file) and device-specific configuration instructions.

State-of-the-art
Digital position, speed and current/torque control. Sinusoidal commutation for smooth operation of EC motors.

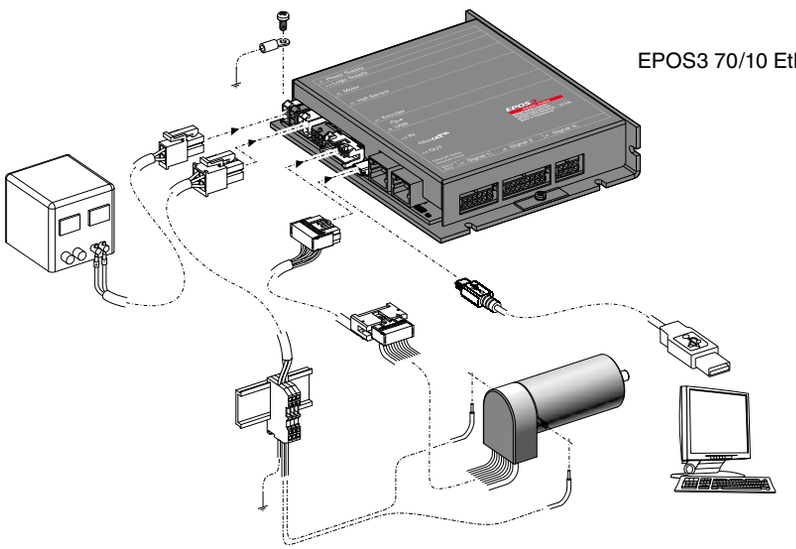

EPOS3 70/10 EtherCAT

Operating modes
Cyclic Synchronuous Position (CSP), Cyclic Synchronuous Velocity (CSV), Cyclic Synchronuous Torque (CST)
Profile Position-, Profile Velocity- and Homing Mode
Path generating with trapezoidal or sinusoidal profiles
Feed forward for velocity and acceleration
Interpolated Position Mode (PVT)
Sinusoidal or block commutation for EC motors
Dual loop position and speed controller
Communication
Communication via EtherCAT
Configuration
Configuration via EtherCAT or USB 2.0

Inputs/Outputs
Free configurable digital inputs e.g. for limit switches and reference switches
Free configurable digital outputs e.g. for holding brakes
Free analog inputs
Available software
EPOS Studio
Firmware
Available documentation
Getting Started
Cable Starting Set
Hardware Reference
Firmware Specification
Communication Guide
Application Notes
Cable
A comprehensive range of cables is available as an option. Details can be found on page 362.

EPOS3 Positioning Controller Data

EtherCAT USB GUI

EPOS3 70/10 EtherCAT
Matched with DC brush motors with encoder or brushless EC motors with Hall sensors and encoder to 700 watts.

Controller versions	
	EtherCAT Slave
Electrical Data	
Operating voltage V_{CC}	11 - 70 VDC
Logic supply voltage V_C (optional)	11 - 70 VDC
Max. output voltage	0.9 x V_{CC}
Max. output current I_{max} (<1 s)	25 A
Continuous output current I_{cont}	10 A
Switching frequency of power stage	50 kHz
Sample rate of PI - current controller	10 kHz
Sample rate of PI - speed controller	1 kHz
Sample rate of PID - positioning control	1 kHz
Max. speed (1 pole pair)	25 000 rpm (sinusoidal); 100 000 rpm (block)
Built-in motor choke per phase	22 µH / 10 A
Input	
Hall sensor signals	H1, H2, H3
Encoder signals	A, A\, B, B\, I, I\ (max. 5 MHz)
Digital inputs	11 (7 optically isolated, 4 differential)
Analog inputs	2 (differential) 12-bit resolution, ±10 V
Output	
Digital outputs	5 (4 optically isolated, 1 differential)
Analog outputs	1 (12-bit resolution, 0…10 V)
Encoder voltage output	+5 VDC, max. 100 mA
Hall sensor voltage output	+5 VDC, max. 30 mA
Auxiliary voltage output	+5 VDC, max. 150 mA
Interface	
EtherCAT	IEEE 802.3 100 Base T (100 Mbit/s, Full Duplex)
USB 2.0	Data+; Data- (max.12 Mbit/s)
Indicator	
Device	green LED, red LED
EtherCAT	green LED, red LED
EtherCAT Port	green LED, yellow LED
Ambient temperature and humidity range	
Operation	-10…+45°C
Storage	-40…+85°C
No condensation	20…80%
Mechanical data	
Weight	Approx. 442 g
Dimensions (L x W x H)	150 x 120 x 29 mm
Mounting threads	Flange for M3-screws
Part Numbers	
	411146 EPOS3 70/10 EtherCAT
Accessories	
	235811 DSR 70/30 Shunt regulator
	Order accessories separately, see page 362

MAXPOS Positioning Controller Summary

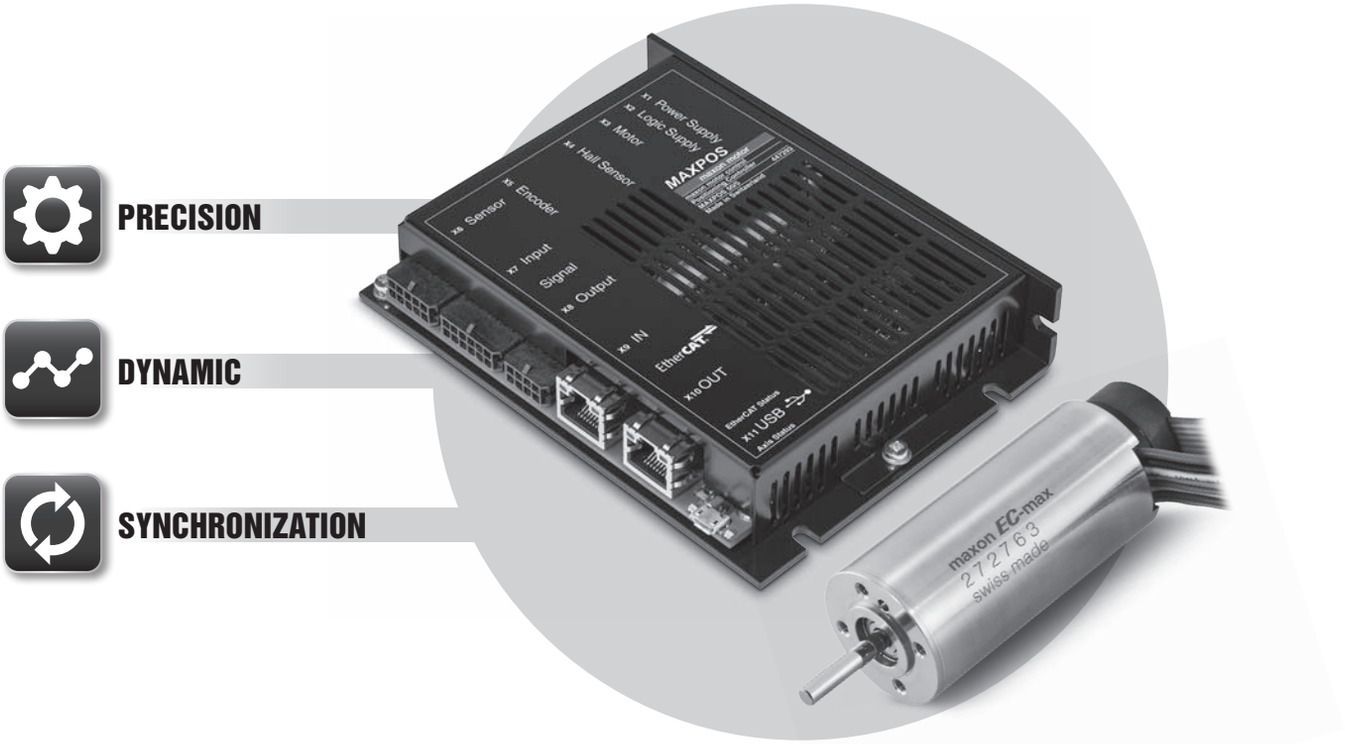

MAXPOS 50/5 EtherCAT Slave

The MAXPOS 50/5 is a motion controller for highly dynamic applications and receives motion and I/O commands from the higher-level EtherCAT master controlling the process. The extremely fast controllers together with the diverse feedback options provide ideal conditions for operation in high-performance applications, raising the bar for precision and synchronization. The MAXPOS 50/5 supports CoE (CAN application layer over EtherCAT).

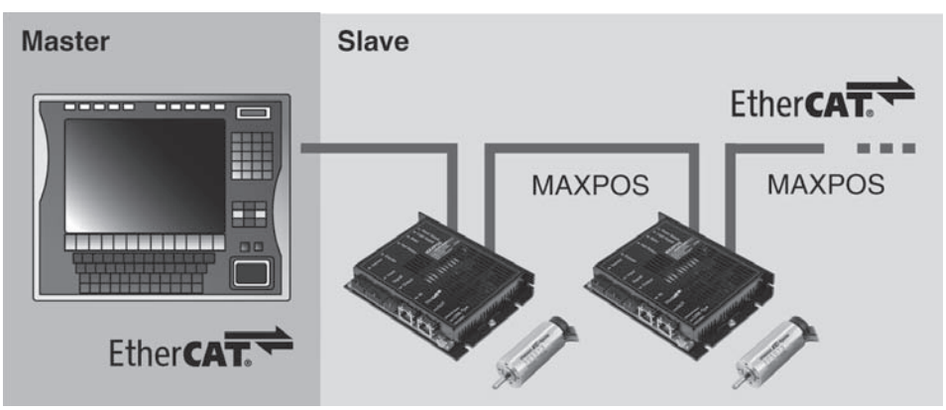

MAXPOS is a modular, digital positioning controller. It is suitable for permanent magnet-activated DC brushed and brushless (maxon EC) motors with incremental or absolute encoders with an operational range of up to 250 W.
A wide range of operating modes allows flexible use in a variety of fields in drive systems, automation, and mechatronics.

Cyclic Synchronous Position (CSP)
The EtherCAT master executes the path planning and sends the target position cyclically and synchronously via the EtherCAT network to the MAXPOS.
The position control loop runs in the MAXPOS. The MAXPOS delivers the measured actual position, speed and current values to the EtherCAT master.

Cyclic Synchronous Velocity (CSV)
The EtherCAT master executes the path planning and sends the target speed cyclically and synchronously via the EtherCAT network to the MAXPOS. The speed control loop runs in the MAXPOS. The MAXPOS delivers the measured actual position, speed and current values to the EtherCAT master. If the PI position control loop is closed via the EtherCAT master, CSV mode is often used.

Cyclic Synchronous Torque (CST)
The EtherCAT master executes the path planning and sends the target torque cyclically and synchronously via the EtherCAT network to the MAXPOS. The torque (current) control loop runs in the MAXPOS. The MAXPOS delivers the measured actual position, speed and current values to the EtherCAT master. If the PID position control loop is closed via the EtherCAT master, CST mode is often used.

Point to point
The “Profile Position Mode” moves the position of the motor axis from point A to point B. Positioning is in relation to the axis Home position (absolute) or the actual axis position (relative).

Position and Speed control with Feed Forward
The combination of feedback and feed forward control provides ideal motion behavior. Feed forward control reduces control error. MAXPOS supports feed forward for acceleration and speed.

Speed control
In “Profile Velocity Mode”, the motor axis is moved with a set speed. The motor axis retains speed until a new speed is set.

Homing
The “Homing Mode” is for referencing to a special mechanical position. There is a wide variety of methods for achieving this.

Feedback options
Two different encoder signals can be evaluated simultaneously. In a suitable master unit, this enables dual loop control in order to compensate for mechanical backlash and elasticity.
A wide range of sensors is permissible: Digital incremental encoders, analog incremental encoders (sin/cos), SSI absolute encoders, (EnDat2.2 and BiSS-C absolute encoders are planned).

Protection
The positioning controller has protective circuits against overcurrent, excess temperature, under- and overvoltage, voltage transients, short-circuits in the motor cable, and against feedback signal loss. An adjustable current limitation protects the motor and load. The digital inputs and outputs are galvanically isolated and protected against overvoltage.

Safe Torque Off (STO)
With this safety feature based on IEC61800-5-2, the drive can be brought to a safe state at any time, from two independent digital inputs. The supply of torque-generating power is interrupted. The state can be monitored via an additional digital output.

Capture inputs (Position Marker)
Digital inputs can be configured so that the actual position value is saved when a positive and/or negative edge of an input appears.

Trigger output (Position Compare)
Digital outputs can be configured so that a digital signal is emitted at a set position value.

Control of Holding Brakes
Control of the holding brake can be integrated in the device status management. Thereby the delay times can be individually configured for switching on and off.

Additional information for technical data of page 360

Standardized
IEC 61158 type 12 EtherCAT slave: CoE (CAN Application Layer over EtherCAT) according to IEC 61800-7 profile type 1 (CiA 402) CANopen standard device profile for drives and motion control. Easily integrated in existing EtherCAT systems. It can be connected to a network of other EtherCAT units. Alternatively configurable via serial interface (USB 2.0/3.0).

Flexible, modular
The same technology for DC and EC motors. Configurable inputs and outputs for limit switches, reference switches, holding brakes and for other sensors and indicators near the drive.

Easy start-up procedure
Graphic user interface with many functions and wizards for start-up procedure, automatic control settings, I/O configuration, tests.

Optimal control characteristics
The fast controller rates and short cycle times of the EtherCAT communication enable applications with exacting requirements for the dynamics of the drive system. Control input from the EtherCAT master can be accepted by the MAXPOS at a frequency of up to 10 kHz and transmitted to the controllers. Distributed Clocks are supported to optimize synchronization of multiple drive axes. With MAXPOS, all the requirements are met for optimal performance in a wide range of high-performance applications.

EtherCAT Master (Beckhoff TwinCAT®): Integration made easy
Easy integration of the position controller MAXPOS 50/5 into the Beckhoff-TwinCAT SoftPLC thanks to existing device description file (ESI file) and device-specific configuration instructions.

State-of-the-art
Digital position, speed and current/torque control. Sinusoidal commutation (FOC) for smooth operation of EC motors.

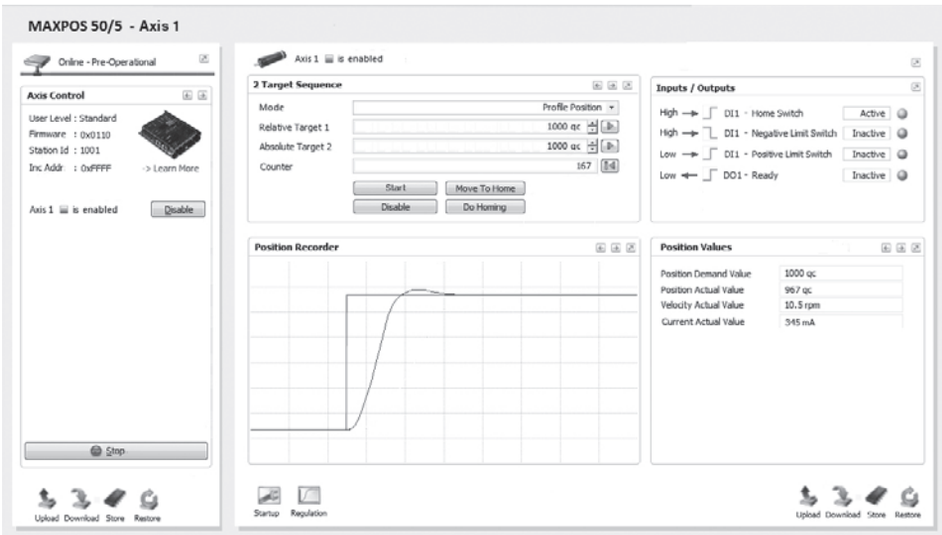

Operating modes

Cyclic Synchronuous Position (CSP), Cyclic Synchronuous Velocity (CSV), Cyclic Synchronuous Torque (CST)

Profile Position-, Profile Velocity- and Homing Mode

Feed forward for velocity and acceleration

Sinusoidal commutation for EC motors

Communication

Communication via EtherCAT with:
– CoE/FoE
– Distributed Clocks Support
– CSP, CSV, CST with cycle times up to 100µs
– Variable PDO mapping

Configuration

Configuration via EtherCAT or USB 2.0/3.0

Inputs/Outputs

Free configurable digital inputs e.g. for limit switches and reference switches

Free configurable digital outputs e.g. for holding brakes

Available software

MAXPOS Studio (Graphical User Interface)

Firmware

Available documentation

Feature Chart

Hardware Reference

Firmware Specification

Communication Guide

Application Notes

Cable

A comprehensive range of cables is available as an option. Details can be found on page 362.

MAXPOS Positioning Controller Data

High Performance | EtherCAT | USB | GUI

Matched with DC brush motors with encoder or brushless EC motors with Hall sensors and encoder to 250 watts.

Controller versions	
	EtherCAT Slave
Electrical Data	
Operating voltage V_{CC}	10 - 50 VDC
Logic supply voltage V_C (optional)	10 - 50 VDC
Max. output voltage	0.95 x V_{CC}
Max. output current I_{max}	15 A
Continuous output current I_{cont}	5 A
Switching frequency of power stage	100 kHz
Sample rate of PI - current controller	100 kHz (10 µs)
Sample rate of PI - speed controller	10 kHz (100 µs)
Sample rate of PID - positioning control	10 kHz (100 µs)
Max. speed (DC)	limited by max. permissible speed (motor) and max. output voltage (controller)
Max. speed (EC; 1 pole pair)	200 000 rpm (sinusoidal)
Built-in motor choke per phase	22 µH / 10 A
Input	
Hall sensor signals	H1, H2, H3
Encoder signals	A, A\, B, B\, I, I\ (max. 5 MHz)
Sensor signals	A, A\, B, B\, I, I\, Clock+, Clock-, Data+, Data-
Digital inputs	6 (galvanically isolated)
Output	
Digital outputs	4 (galvanically isolated)
Encoder voltage output	+5 VDC, max. 70 mA
Hall sensor voltage output	+5 VDC, max. 30 mA
Sensor voltage output	+5 VDC, max. 150 mA
Auxiliary voltage output	+24 VDC, max. 300 mA when V_{CC} > 30 VDC
	V_{CC}-5 V, max. 300 mA when V_{CC} < 30 VDC
Interface	
EtherCAT	IEEE 802.3 100 Base T (100 Mbit/s, Full Duplex)
USB 2.0/3.0	Data+; Data- (max.12 Mbit/s, full speed)
Indicator	
Axis Status	green LED, red LED
EtherCAT Status	green LED, red LED
EtherCAT Port Activity/Link State	green LED
Ambient temperature and humidity range	
Operation	-30…+45°C
Storage	-40…+85°C
No condensation	20…80%
Mechanical data	
Weight	Approx. 302 g
Dimensions (L x W x H)	140 x 103.5 x 27 mm
Mounting	Flange for M4-screws
Part Numbers	
	447293 MAXPOS 50/5
Accessories	
	309687 DSR 50/5 Shunt regulator
	Order accessories separately, see page 362

Summary maxon motor control

4-Q Servocontroller				Page
ESCON		403112	ESCON 36/2 DC, for DC motors, speed control (open loop/closed loop), current control, 2/4 A, 10–36 VDC	342
		414533	ESCON 36/3 EC, for EC motors, speed control (open loop/closed loop), current control, 2.7/9 A, 10–36 VDC	342
	NEW	446925	ESCON Module 50/4 EC-S, for sensorless EC motors, speed control (open loop/closed loop), 4/12 A, 10–50 VDC	343
		409510	ESCON 50/5, for DC/EC motors, speed control (open loop/closed loop), current control, 5/15 A, 10–50 VDC	344
		438725	ESCON Module 50/5, for DC/EC motors, speed control (open loop/closed loop), current control, 5/15 A, 10–50 VDC	343
		422969	ESCON 70/10, for DC/EC motors, speed control (open loop/closed loop), current control, 10/30 A, 10–70 VDC	344

4-Q-DC Servoamplifier			
LSC	**NRND**	250521	LSC 30/2, linear 4-Q-Servoamplifier 30 V/2 A in module housing
ADS	**NRND**	145391	ADS 50/5, pulsed (PWM) 4-Q-DC Servoamplifier 50 V/5 A in module housing
	NRND	201583	ADS 50/10, pulsed (PWM) 4-Q-DC Servoamplifier 50 V/10 A in module housing
	NRND	166143	ADS_E 50/5, pulsed (PWM) 4-Q-DC Servoamplifier 50 V/5 A in racket card (Eurocard)
	NRND	168049	ADS_E 50/10, pulsed (PWM) 4-Q-DC Servoamplifier 50 V/10 A in racket card (Eurocard)

1-Q-EC Amplifier				
DECS	**NRND**	274645	DECS 5/0.05, digital 1-Q-EC Amplifier 5 V/0.05 A, sensorless, speed control, open electronic circuit board	
	NRND	343253	DECS 50/5, digital 1-Q-EC Amplifier 50 V/5 A, sensorless, speed control, open electronic circuit board	
DEC	**NRND**	318305	DEC 24/1, digital 1-Q-EC Amplifier 24 V/1 A, speed control, adapter FPC pitch 0.5 mm	
	NRND	249630	DEC 24/1, digital 1-Q-EC Amplifier 24 V/1 A, speed control, adapter FPC pitch 1.0 mm	
	NRND	249631	DEC 24/1, digital 1-Q-EC Amplifier 24 V/1 A, speed control, adapter pin connector pitch 2.5 mm	
	NRND	249632	DEC 24/1, digital 1-Q-EC Amplifier 24 V/1 A, speed control, adapter screw type block pitch 2.54 mm	
	NRND	381510	DEC 24/1, digital 1-Q-EC Amplifier 24V/1A, speed control, adapter FPC pitch 0.5 mm to EC 9.2 flat, EC 8	
	NRND	249633	DEC 24/1, digital 1-Q-EC Amplifier 24 V/1 A, speed control, basic module, no adapter	
		367661	DEC Module 24/2, digital 1-Q-EC Amplifier 24 V/2 A, speed control, OEM module	346
	NRND	336286	DEC 24/3, digital 1-Q-EC Amplifier 24 V/3 A, speed control, adapter pin connector pitch 2.5 mm	
	NRND	336287	DEC 24/3, digital 1-Q-EC Amplifier 24 V/3 A, speed control, adapter FPC pitch 1.0 mm	
		380200	DEC Module 50/5, digital 1-Q-EC Amplifier 50 V/5 A, speed control, OEM module	346
	NRND	230572	DEC 50/5, digital 1-Q-EC Amplifier 50 V/5 A, speed control, current control, PWM operation	

4-Q-EC Amplifier			
DECV	**NRND**	305259	DECV 50/5, digital 4-Q-EC Amplifier 50 V/5 A, speed control
DEC	**NRND**	306089	DEC 70/10, digital 4-Q-EC Amplifier 70 V/10 A, speed control, current control

4-Q-EC Servoamplifier			
DES	**NRND**	205679	DES 50/5, digital 4-Q-EC Servoamplifier 50 V/5 A, sinusoidal commutation
	NRND	228597	DES 70/10, digital 4-Q-EC Servoamplifier 70 V/10 A, sinusoidal commutation

Positioning				
EPOS2		380264	EPOS2 24/2 for EC motors, digital positioning controller, 2 A, 9–24 VDC	350
		390003	EPOS2 24/2 for DC/EC motors, digital positioning controller, 2 A, 9–24 VDC	350
		390438	EPOS2 24/2 for DC motors, digital positioning controller, 2 A, 9–24 VDC	350
		360665	EPOS2 Module 36/2 OEM positioning controller plug-in module, 2 A, 11–36 VDC	350
		392159	EPOS2 Module 24/3 OEM positioning controller plug-in module, 3 A, 11–24 VDC	
		367676	EPOS2 24/5, digital positioning controller, 5 A, 11–24 VDC	351
		347717	EPOS2 50/5, digital positioning controller, 5 A, 11–50 VDC	351
		375711	EPOS2 70/10, digital positioning controller, 10 A, 11- 70 VDC	351
EPOS2 P		378308	EPOS2 P 24/5, digital positioning controller, programmable, 5 A, 11–24 VDC	354
EPOS3		411146	EPOS3 70/10 EtherCAT, digital positioning controller, 10 A, 11–70 VDC	357
MAXPOS	**NEW**	447293	MAXPOS 50/5, digital positioning controller, 5 A, 10–50 VDC	360

Summary maxon motor control Accessories

Backplane

NRND	166873	Backplane with screw type terminal block to ADS_E 50/5 (166143) and ADS_E 50/10 (168049)

Front panel

NRND	167850	Front panel 3HE / 5TE to ADS_E 50/5 (166143)
NRND	168910	Front panel 3HE / 7TE to ADS_E 50/10 (168049)

Motor choke

	137303	Choke module, 3 x 0.25 mH, 5.0 A, L x W x H (90 x 70 x 49 mm) with screw type terminal block
	347919	Choke module, 3 x 0.1 mH, 10.0 A, L x W x H (90 x 70 x 49,7 mm) with screw type terminal block

Cable

	403957	Power Cable (length 1.5 m) to 403112, 414533
	403962	DC Motor Cable (length 1.5 m) to 403112
	403964	I/O Cable 7core (length 1.5 m) to 403112, 414533
	403965	I/O Cable 8core (length 1.5 m) to 403112, 414533
	403968	USB Type A - micro B Cable (length 1.5 m) to 403112, 414533, 409510, 438725, 422969, 446925, 447293
	275829	Power Cable (length 3 m) to 347717, 367676, 375711, 378308, 411146, 447293
	275851	Motor Cable (length 3 m) to 347717, 367676, 375711, 378308, 411146, 447293
	303490	DC Motor Cable (length 3 m) to 390003
	275878	Hall Sensor Cable (length 3 m) to 347717, 367676, 375711, 378308, 411146, 447293
	302948	Motor/Hall Sensor Cable (length 3 m) to 390003
	275934	Encoder Cable (length 3 m) to 347717, 367676, 375711, 378308, 390438, 380264, 390003, 403112, 409510, 422969, 411146, 447293
	275932	Signal Cable 16core (length 3 m) to 347717, 367676, 375711, 378308, 390003, 411146
	300586	Signal Cable 6x2core (length 3 m) to 347717, 375711, 411146
	350390	Signal Cable 4x2core (length 3 m) to 347717, 411146
	378173	Signal Cable 3x2core (length 3m) to 375711
	275900	RS232-COM Cable (length 3 m) to 347717, 367676, 375711, 378308, 390003
	350392	USB Type A - B Cable (length 3 m) to 347717
	370513	USB Type A - mini B Cable (length 3 m) to 367676, 375711, 378308, 390438, 380264, 390003, 411146
	275908	CAN-COM Cable (length 3 m) to 347717, 367676, 375711, 378308, 390003
	275926	CAN-CAN Cable (length 3 m) to 347717, 367676, 375711, 378308, 390003
	319471	CAN-Y Cable to 390003, 378308
	422827	Ethernet Cable (length 2 m) to 411146, 447293
NEW	451290	Sensor Cable 5x2core to 447293
NEW	451291	Signal Cable 12core to 447293
NEW	451292	Signal Cable 8core to 447293
	404404	ESCON 36/2 DC Connector Set to 403112
	425255	ESCON 36/3 EC Connector Set to 414533
	303807	EPOS2 24/2 Connector Set to 390003
	351061	EPOS2 50/5 Connector Set to 347717
	384915	EPOS2 24/5 Connector Set to 367676, 378308
	381405	EPOS2 70/10 Connector Set to 375711
	423544	EPOS3 70/10 Connector Set to 411146
NEW	451746	MAXPOS 50/5 Connector Set to 447293

Summary maxon motor control Accessories

Adapter

	220300	Adapter Flex print connector 11 poles on screw type terminal block 8 poles available for maxon flat motor
	220310	Adapter Flex print connector 4 poles on screw type terminal block 4 poles available for maxon flat motor
	425931	Adapter Flex print connector 8 poles on screw type terminal block 8 poles available for maxon micromotors, pitch 0.5 mm
NEW	473103	Adapter Flex print connector 6 poles on screw type terminal block 6 poles
	223774	Adapter spring contact strip according to DIN41651 10 poles on screw type terminal block 8 poles
	262359	Adapter male header to DIN41651 10 poles on screw type terminal block 10 poles
NEW	459875	Adapter pin-header to pin-header acc. to DIN 41651 10-pin with additional spring clamp terminal block for motor connections
	405120	Adapter, encoder connector adapter 1.27 mm pitch to 2.54 mm pitch (DIN 41651)
	397973	Adapter EC 6 MILE encoder to terminal strip and DIN 41651
NRND	257703	Adapter to DEC 24/1: Flex print connector 8 poles, top contact style, pitch 0.5 mm
NRND	249635	Adapter to DEC 24/1: Flex print connector 11 poles, top contact style, pitch 1.0 mm
NRND	249636	Adapter to DEC 24/1: Pin connector with snap-in (Stocko) 8 poles, pitch 2.5 mm
NRND	249637	Adapter to DEC 24/1: Screw type terminal block 8 poles, pitch 2.54 mm, AWG 20 - 26
NRND	380555	Adapter to DEC 24/1: Flex print connector 8 poles, top contact style, pitch 0.5 mm to EC 9.2 flat and EC 8
	418719	Adapter Black, Flex print connector 11 poles on socket terminal strips 8 poles available for 380264, 414533
	418723	Adapter Blue, Flex print connector 8 poles on socket terminal strips 8 poles available for 380264, 414533
	418721	Adapter Green, Flex print connector 8 poles on socket terminal strips 8 poles available for 380264, 414533

Shunt regulator

	309687	DSR 50/5, shunt regulator 27 VDC and 56 VDC (adjustable), P_{max} 300 W, P_{cont} 10 W
	235811	DSR 70/30, shunt regulator 12-75 VDC (selectable), P_{max} 475 W, P_{cont} 25 W, module housing 180 x 103 x 26 mm

Starter kits, evaluation boards, motherboards

DEC		370652	DEC module evaluation board, with switch, LED, potentiometer etc. suitable for 367661 and 380200
ESCON		438779	ESCON Module Motherboard with pluggable screw-type terminal block suitable for use with 438725
	NEW	450237	ESCON Module Motherboard Sensorless with pluggable screw-type terminal block suitable for use with 446925
EPOS2		363407	EPOS2 module 36/2 starter kit consisting of 361435, 360665, 275829, 275851, 275878, 275934, 275932, 350392
		361435	EPOS2 module evaluation board, 1-axis (with switch, LED, potentiometer and connection plug) suitable for 360665
		407582	EPOS2 module motherboard, 1 to max. 11 axes suitable for 360665 (inclusive 1 each red & black power-link-plug and CAN-link cable) Optional accessories: 407583 EPOS2 motherboard USB module (incl. 4-wire connection leads l = 0.25 m, 2x M3 screws) 407584 EPOS2 motherboard RS232 module (incl. 6-wire connection leads l = 0.25 m, 2x M3 screws) 407585 EPOS2 motherboard I/O expander module (2x M3 screws) 423536 EPOS2 motherboard dual encoder module (2x M3 screws) 423507 EPOS2 motherboard Power cable (l = 1 m) suitable for 407582 423526 EPOS2 motherboard USB type A cable (l = 1.5 m) suitable for 407583 423530 EPOS2 motherboard RS232 DB9 cable (l = 1 m) suitable for 407584
EPOS2 P		327460	EPOS2 P 24/5 starter kit consisting of EPOS2 P 24/5, EC motor with encoder, power supply unit, I/O board, cables

Software

ESCON		409286	ESCON USB stick including ESCON Setup for 403112, 414533, 446925, 409510, 438725, 422969
MAXPOS	NEW	459639	MAXPOS USB stick including MAXPOS Setup for 447293

For your personal notes

P [mW] I [mA] η [%] n [rpm min⁻¹]

M [mNm]

maxon compact drive

maxon compact drive

maxon's compact drives feature controllers, sensors and motors in a modern aluminium casing. The use of existing maxon products with an adapted design results in robust, space-saving drive solutions with high power density. The decentralized concept of these intelligent drives minimizes the use of centralized controllers.

Summary	366
MCD EPOS	367–368

MCD EPOS Intelligent compact drive

Driving
A reliable drive solution is the key to production machinery with many years of maintenance-free operation in a variety of applications.

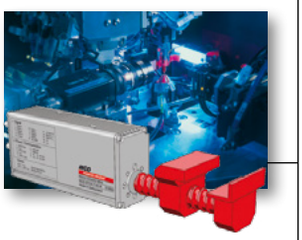

Setting-up
The rapid set-up of processing machinery which offers both precision and long-term accuracy is the key to efficient production.

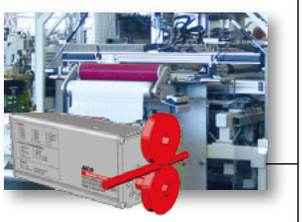

Guiding
Products that are dynamically guided throughout the entire process ensure consistent product quality.

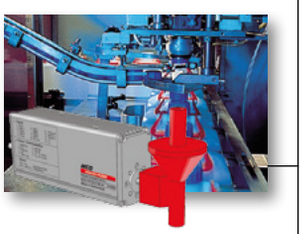

Dispensing
The precise set-up of dispensing systems provides maximum flexibility through the accurate dosing of individual component quantities.

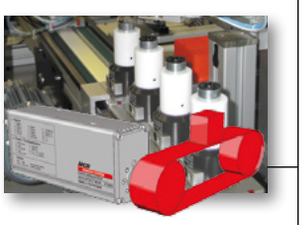

Positioning
Several synchronized axes transport the product to the correct location with both high accuracy and sustained reproducibility.

Maintenance-free positioning drive with tried and trusted components
The combination of the brushless maxon EC motor, digital MR encoder and the fully digital EPOS positioning controller results in a highly dynamic, maintenance-free positioning drive with excellent functionality and high efficiency. The programmable version MCD EPOS P is equipped with a processor and memory for standalone operation.

A complete system – easy start-up procedure
The compact drive's controller-motor combination is optimally tuned and ready for use. Wiring is kept to a minimum through direct connection to the CANopen bus or a PLC. Wiring errors are largely avoided and installation time is significantly reduced. The drive is controlled, parameterized and diagnosed via the CAN bus or the serial port (RS232).

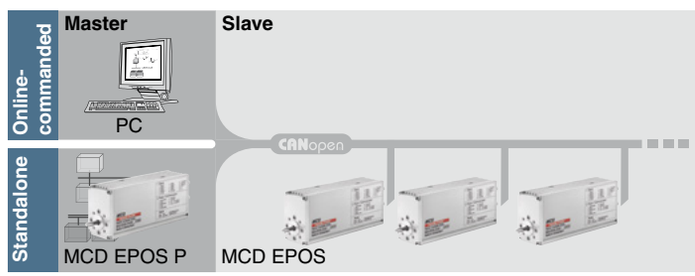

Intelligence at the right place
maxon's compact drives are fitted with several optically isolated inputs and outputs. Sensor signals and events can be evaluated directly in the drive. Cable lengths are shorter, thus reducing susceptibility to interference.

CANopen, IEC 61131-3 and Motion Control Library – key to standardized operation
The MCD can be connected according to the CANopen standard, allowing communication with other CANopen devices.
Drive programming complies with the IEC 61131-3 standard using the powerful "EPOS Studio" tool.
The integration of the Motion Control Library under the widely used standards reduces program complexity and development costs.

Everything integrated – also a question of price
Substantial cost-savings have been made thanks to the careful selection and optimization of components. The resulting drive is available at an unsurpassed price which is well below the cost of the individual parts. Simplified mounting results in further cost-savings.

Drives with a broad application spectrum
The requirements of compact design and enhanced functionality have been completely realized with maxon's compact drives. Their supreme flexibility ensures use in a wide range of industrial applications.

MCD EPOS and EPOS P 60 W Compact Drive

DIGITAL CANopen RS232 GUI

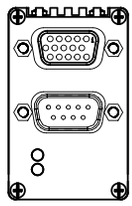

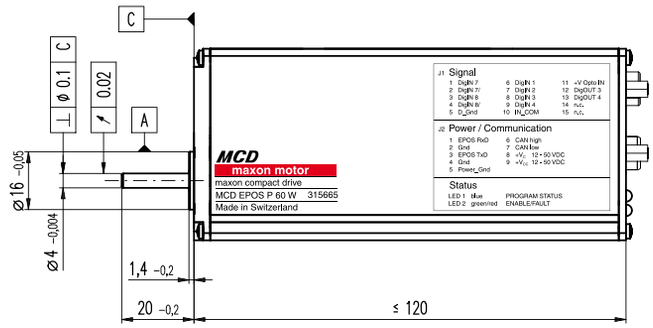

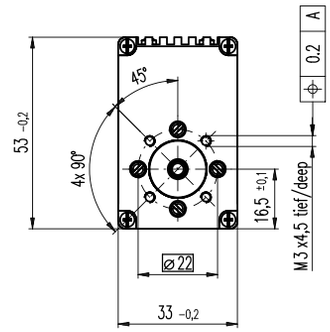

M 1:2

Motor Data

Nominal torque (Max. continuous torque)		54 mNm (T_U=25°C, 5000 rpm)
Max. torque		218 mNm
Max. permissible speed (restricted by econder)		12000 rpm
Max. efficiency		70%
Torque constant		24.3 mNm/A
Speed constant		393 rpm/V
Speed/torque gradient		20.6 rpm/mNm
Rotor inertia		21.9 gcm²
Axial play at axial load (Preloaded ball bearings)	< 6 N	0 mm
	> 6 N	0.14 mm
Radial play		preloaded
Max. axial load (dynamic)		5.5 N
Max. force for press fits (static)		100 N
Max. radial loading, 5 mm from flange		25 N

Pin layout

Connector J1: Signal
D Sub connector High Density 15 poles (female)

1 DigIN 7	6 DigIN 1	11 +V Opto IN
2 DigIN 7/	7 DigIN 2	12 DigOUT 3
3 DigIN 8	8 DigIN 3	13 DigOUT 4
4 DigIN 8/	9 DigIN 4	14 not connected
5 D_Gnd	10 IN_COM	15 not connected

Connector J2: Power/Communication
D Sub connector 9 poles (male)

1 EPOS RxD	4 Gnd	7 CAN low
2 Gnd	5 Power_Gnd	8 $+V_C$ 12-50 VDC
3 EPOS TxD	6 CAN high	9 $+V_{CC}$ 12-50 VDC

Ambient temperature/Humidity range

Protection class	IP42
Operating	-20 ... +85°C power derating 1.4%/K from T_U = 25°C
Storage	-40 … +85°C
Non condensating	20 … 80 %
Max. case temperature	< 100°C

Mechanical data

Weight	approx. 528 g
Dimensions (L x W x H)	120x33x53 mm
Mounting plate	four M3x4.5 threaded holes

Electrical data

Power supply voltage $+V_{CC}$	+12….+50 VDC
Logic supply voltage $+V_C$ (optional)	+12….+50 VDC
Max. output voltage	0.9 x V_{CC}
Max. output current I_{max}	9 A
Continuous output current I_{cont}	2.6 A (T_U = 25°C, 5000 rpm)
Switching frequency	50 kHz
Controller	
Sample rate PI-current controller	10 kHz
Sample rate PI-speed controller	1 kHz
Sample rate PID-positioning controller	1 kHz
Position resolution	0.09°
Position accuracy	± 1°
Position reproducibility	± 0.09°
Encoder	1000 Imp./3 channels
Inputs	
4 digital inputs (optically isolated)	+9…+24 VDC
2 digital inputs (differential)	EIA-standard RS-422
Outputs	
2 digital outputs (optically isolated)	max. +24 VDC (I_L<350 mA)
Interfaces	
RS-232 (EIA-standard RS-232)	max. 115 200 bit/s
CAN (high-speed; ISO 11898 compatible)	max. 1 MBit/s
CAN ID	LSS CiA DSP-305
Protective functions	Current Limit (adjustable), Under-/over-voltage limitation, Temperature monitoring
LED indicator	
Bi-colour LED	green = Enable, red = Fault blink pattern = Operating status
Blue LED (only master version)	program status

Performance features MCD EPOS P

- 32 bit host processor, 60 MHz
- 512 KB memory, with 256 KB free user program memory
- Typical 2.5 ms/5000 lines AWL
- 512 Byte non-volatile memory
- Digital motion control signal processor

maxon Modular System

Planetary Gearhead
∅32 mm, 1.0-8.0 Nm,
P. 272/277/279/301-303

Planetary Gearhead
∅42 mm,
3.0 - 15.0 Nm, p. 284

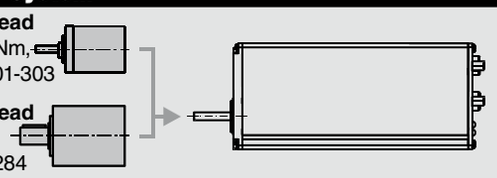

Part Numbers

326343	MCD EPOS 60 W
315665	MCD EPOS P 60 W

Programming

EPOS operating modes

Point to point
— Positioning the motor axis from point A to point B (absolute and relative)

Position control with feed forward
— Reducing control error through acceleration and speed feed forward

Speed control
— Rotating the motor axis at a pre-defined set value speed

Torque control (current control)
— Controlling a constant torque on the motor shaft. Minimum torque ripple through sinusoidal commutation

Homing mode
— Referencing onto a special mechanical position with more than 30 different methods

Electronic gearing
— Synchronizing (also with intermediate factor) with an externally produced reference variable

Step/Direction
— Step-by-step movement of the motor axis

Capture inputs (position marker)
— Saving positions when a positive and/or negative edge of an input signal appears

EPOS Studio

Editors (ST, IL, FBD, LD, SFC) of the powerful "EPOS Studio" tool are available for programming according to IEC 61131-3. The integrated project browser shows all network resources. Complex programs with a large number of decentralized controls can be optimally managed with it. Drive systems are configured and networked quickly using intelligent step-by-step wizards.

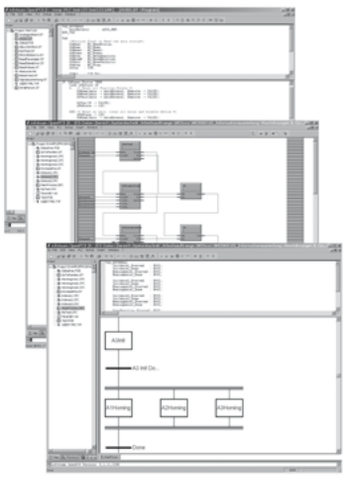

— Windows-based development environment
— IEC 61131-3 programming languages (ST, IL, FBD, LD, SFC)
— IEC 61131-3 standard libraries
— Motion control function blocks
— maxon Utility function block library
— CANopen function block library
— User libraries
— Network variables and data exchange
— Online debugger with break points and watch variables
— Axis configuration and parameterization
— Online help

Motion Control Library

The complexity and development costs of drive systems are substantially reduced. The Motion Firmware Library was implemented according to the widely-used Motion Control Standard. Standardized function blocks make implementation easy.

— Drive control
— Referencing (Homing)
— Speed control
— Positioning absolute and relative
— Error management
— Parameter handling

Accessories MCD EPOS 60 W

Mounting Kit

Brackets for mounting the optional the MCD EPOS 60 W. The brackets provided can be placed in any position along the length of the MCD. Fixing screws are included.

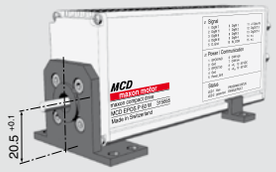

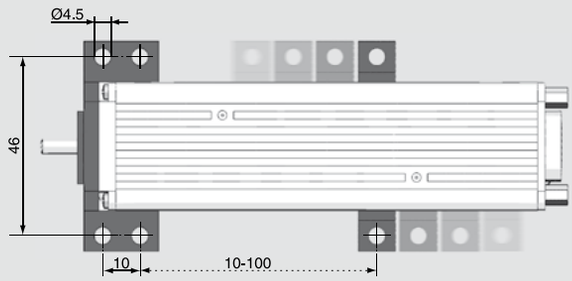

Part Number
326930 MCD EPOS 60 W Mounting-Kit

Cable

Signal cable

Part Number
326923 MCD EPOS Signal Cable

Power/RS232-CAN cable

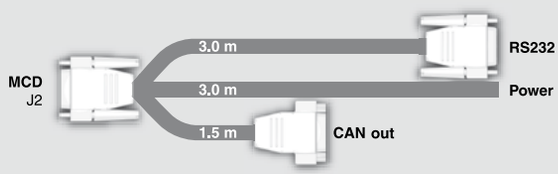

Part Number
325939 MCD EPOS Power/RS232-CAN Cable

Power/CAN-CAN cable

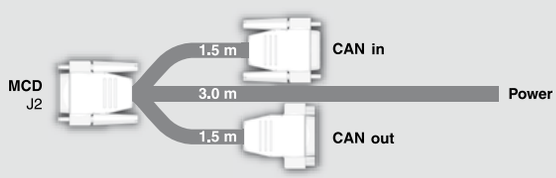

Part Number
325235 MCD EPOS Power/CAN-CAN Cable

CAN Termination plug

Is required as line termination for the CAN-Network.

Part Number
326925 MCD EPOS CAN Termination Plug

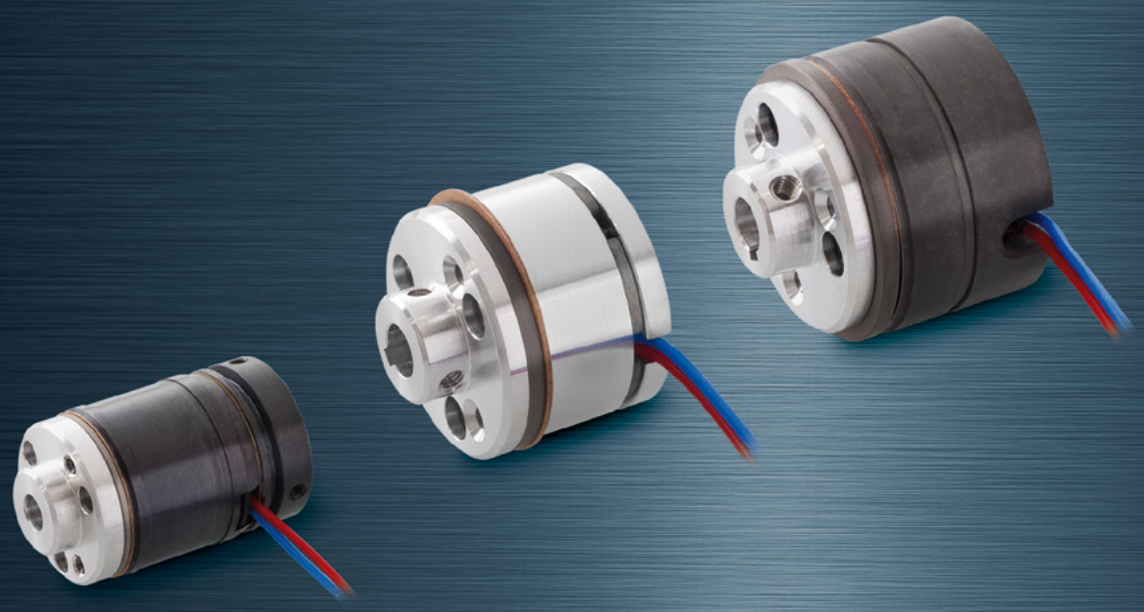

maxon accessories

maxon accessories

Useful parts complete maxon's full range of drive technology products. Brakes may only be assembled with motors in the delivery plant.

Brakes	370–376
End caps	377

Brake AB 20 24 VDC, 0.1 Nm

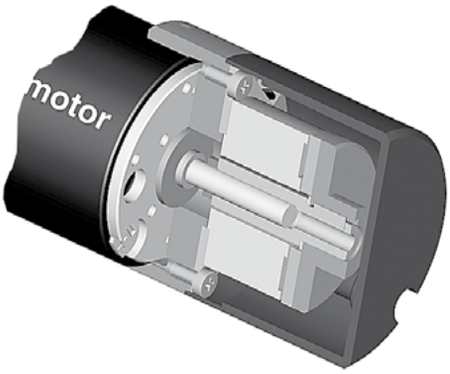

Important Information

- Permanent magnet - single-face brake for DC (dry operation). Braking in unpowered condition.
- Holding brake, prevents rotation of the shaft at standstill or with turned off motor power.
- Not suitable for dynamic braking.

Stock program
Standard program
Special program (on request)

Part Numbers	
301212	301213

Type											

maxon Modular System

+ Motor	Page	+ Gearhead	Page	+ Sensor	Page	Ø AB [mm]	Overall length [mm] / • see Gearhead	
EC-max 22, 12 W	202					22	67.8	
EC-max 22, 12 W	202	GP 22, 0.5 - 2.0 Nm	265/266			22	•	
EC-max 22, 12 W	202	KD 32	281			22	•	
EC-max 22, 12 W	202	GP 22 S	299/300			22	•	
EC-max 22, 25 W	203					22	84.2	
EC-max 22, 25 W	203	GP 22, 0.5 - 3.4 Nm	266			22	•	
EC-max 22, 25 W	203	GP 32, 1 - 6 Nm	277			22	•	
EC-max 22, 25 W	203	KD 32	281			22	•	
EC-max 22, 25 W	203	GP 32 S	301-303			22	•	
EC-max 30, 40 W	204					30		77.6
EC-max 30, 40 W	204	GP 32, 1.0 - 8.0 Nm	277/279			30		•
EC-max 30, 40 W	204	KD 32, 1.0 - 4.5 Nm	281			30		•
EC-max 30, 40 W	204	GP 32 S	301-303			30		•
EC-max 30, 40 W	204			HEDL 5540	328	30		98.4
EC-max 30, 40 W	204	GP 32, 1.0 - 8.0 Nm	277/279	HEDL 5540	328	30		•
EC-max 30, 40 W	204	KD 32, 1.0 - 4.5 Nm	281	HEDL 5540	328	30		•
EC-max 30, 40 W	204	GP 32 S	301-303	HEDL 5540	328	30		•
EC-max 30, 60 W	205					30		99.6
EC-max 30, 60 W	205	GP 32, 1.0 - 8.0 Nm	277/279			30		•
EC-max 30, 60 W	205	KD 32, 1.0 - 4.5 Nm	281			30		•
EC-max 30, 60 W	205	GP 42, 3 - 15 Nm	284			30		•
EC-max 30, 60 W	205			HEDL 5540	328	30		120.4
EC-max 30, 60 W	205	GP 32, 1.0 - 8.0 Nm	277/279	HEDL 5540	328	30		•
EC-max 30, 60 W	205	KD 32, 1.0 - 4.5 Nm	281	HEDL 5540	329	30		•
EC-max 30, 60 W	205	GP 42, 3 - 15 Nm	284	HEDL 5540	328	30		•
EC-4pole 30, 100 W	213					30		83.2
EC-4pole 30, 100 W	213	GP 32, 8 Nm	279			30		•
EC-4pole 30, 100 W	213	GP 42, 3 - 15 Nm	284			30		•
EC-4pole 30, 100 W	213			HEDL 5540	329	30		104
EC-4pole 30, 100 W	213	GP 32, 8 Nm	279	HEDL 5540	329	30		•
EC-4pole 30, 100 W	213	GP 42, 3 - 15 Nm	284	HEDL 5540	329	30		•
EC-4pole 30, 200 W	214					30		100.2
EC-4pole 30, 200 W	214	GP 32, 8 Nm	279			30		•
EC-4pole 30, 200 W	214	GP 42, 3 - 15 Nm	284			30		•
EC-4pole 30, 200 W	214			HEDL 5540	329	30		121
EC-4pole 30, 200 W	214	GP 32, 8 Nm	279	HEDL 5540	329	30		•
EC-4pole 30, 200 W	214	GP 42, 3 - 15 Nm	284	HEDL 5540	329	30		•

Technical Data

Max. permissible static torque at 20°C	0.1 Nm	Nominal voltage, smoothed		24 VDC ±10%
Mass inertia	1.8 gcm^2	Resistance		R_{20} = 227 Ω ±6%
Max. permissible speed	49000 rpm	Duty cycle		100%
Weight	29 g	Reaction time	– Coupling	≤ 12 ms
Ambient temperature range	-40…+100°C		– Opening	≤ 6 ms

Pin Allocation

Cable (AWG 26)	Designation
red	U_{Brake} + 24 VDC
blue	U_{Brake} GND
Min. cable length	350 mm

Brake AB 28 24 VDC, 0.4 Nm

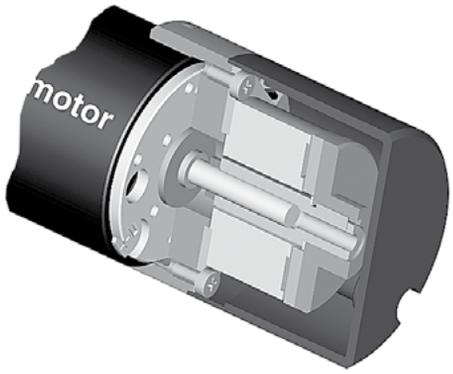

Important Information

- Permanent magnet - single-face brake for DC (dry operation). Braking in unpowered condition.
- Holding brake, prevents rotation of the shaft at standstill or with turned off motor power.
- Not suitable for dynamic braking.
- It is possible to lower the voltage applied to the brake after it has been energized, for the purpose of reducing heat loss.

Stock program
Standard program
Special program (on request)

Part Numbers

301215

Type

maxon Modular System

+ Motor	Page	+ Gearhead	Page	+ Sensor	Page	Ø AB [mm]	Overall length [mm] / • see Gearhead
EC-max 40, 70 W	206					40	92.4
EC-max 40, 70 W	206	GP 42, 3 - 15 Nm	284			40	•
EC-max 40, 70 W	206			HEDL 5540	328	40	110.7
EC-max 40, 70 W	206	GP 42, 3 - 15 Nm	284	HEDL 5540	328	40	•
EC-max 40, 120 W	207					40	122.4
EC-max 40, 120 W	207	GP 52, 4 - 30 Nm	288			40	•
EC-max 40, 120 W	207			HEDL 5540	328	40	140.7
EC-max 40, 120 W	207	GP 52, 4 - 30 Nm	288	HEDL 5540	328	40	•

Technical Data

Max. permissible static torque at 20°C	0.4 Nm	Nominal voltage, smoothed		24 VDC ±10%
Mass inertia	10 gcm^2	Resistance		R_{20} = 92.5 Ω ±6%
Max. permissible speed	16 000 rpm	Duty cycle		100%
Weight	0.05 kg	Reaction time	– Coupling	≤ 12 ms
Ambient temperature range	-5…+85°C		– Opening	≤ 6 ms

Pin Allocation

Cable (AWG 26)	Designation
red	U_{Brake} + 24 VDC
blue	U_{Brake} GND
Min. cable length	350 mm

Brake AB 28 24 VDC, 0.4 Nm

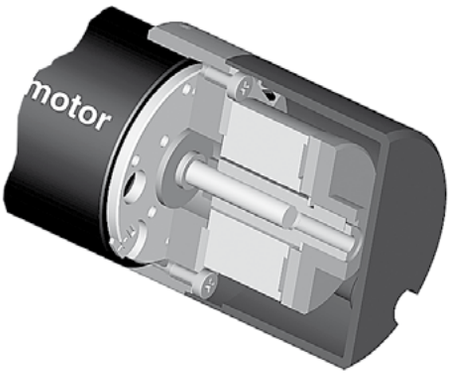

Important Information

- Permanent magnet - single-face brake for DC (dry operation). Braking in unpowered condition.
- Holding brake, prevents rotation of the shaft at standstill or with turned off motor power.
- Not suitable for dynamic braking.
- It is possible to lower the voltage applied to the brake after it has been energized, for the purpose of reducing heat loss.

Stock program
Standard program
Special program (on request)

Part Numbers

228384	228387

Type

maxon Modular System

+ Motor	Page	+ Gearhead	Page	+ Sensor	Page	Ø AB [mm]	Overall length [mm] / • see Gearhead	
RE 25, 20 W	108					40	77.1	
RE 25, 20 W	108	GP 22, 0.5 Nm	262			40	•	
RE 25, 20 W	108	GP 26, 0.75 - 2.0 Nm	270			40	•	
RE 25, 20 W	108	GP 32, 0.75 - 4.5 Nm	272			40	•	
RE 25, 20 W	108	GP 32, 0.75 - 4.5 Nm	273			40	•	
RE 25, 20 W	108	GP 32, 1.0 - 6.0 Nm	276/281			40	•	
RE 25, 20 W	108	GP 32 S	301-303			40	•	
RE 25, 20 W	108			HED_ 5540	326/329	40		94.3
RE 25, 20 W	108	GP 22, 0.5 Nm	262	HED_ 5540	326/329	40		•
RE 25, 20 W	108	GP 26, 0.75 - 2.0 Nm	270	HED_ 5540	326/329	40		•
RE 25, 20 W	108	GP 32, 0.75 - 4.5 Nm	272	HED_ 5540	326/329	40		•
RE 25, 20 W	108	GP 32, 0.75 - 4.5 Nm	273	HED_ 5540	326/329	40		•
RE 25, 20 W	108	GP 32, 1.0 - 6.0 Nm	276/281	HED_ 5540	326/329	40		•
RE 25, 20 W	108	GP 32 S	301-303	HED_ 5540	326/329	40		•
RE 25, 20 W	109					40	88.6	
RE 25, 20 W	109	GP 26, 0.75 - 2.0 Nm	270			40	•	
RE 25, 20 W	109	GP 32, 0.75 - 4.5 Nm	272			40	•	
RE 25, 20 W	109	GP 32, 0.75 - 4.5 Nm	273			40	•	
RE 25, 20 W	109	GP 32, 1.0 - 6.0 Nm	276/281			40	•	
RE 25, 20 W	109	GP 32 S	301-303			40	•	
RE 25, 20 W	109			HED_ 5540	325/327	40		105.8
RE 25, 20 W	109	GP 26, 0.75 - 2.0 Nm	270	HED_ 5540	325/327	40		•
RE 25, 20 W	109	GP 32, 0.4 - 2.0 Nm	272	HED_ 5540	325/327	40		•
RE 25, 20 W	109	GP 32, 0.75 - 4.5 Nm	273	HED_ 5540	325/327	40		•
RE 25, 20 W	109	GP 32, 1.0 - 6.0 Nm	276/281	HED_ 5540	325/327	40		•
RE 25, 20 W	109	GP 32 S	301-303	HED_ 5540	325/327	40		•
RE 35, 90 W	112					40	107.1	
RE 35, 90 W	112	GP 32, 0.75 - 6.0 Nm	272-278			40	•	
RE 35, 90 W	112	GP 32, 4.0 - 8.0 Nm	279			40	•	
RE 35, 90 W	112	GP 42, 3 - 15 Nm	283			40	•	
RE 35, 90 W	112			HED_ 5540	325/327	40		124.3
RE 35, 90 W	112	GP 32, 0.75 - 6.0 Nm	272-278	HED_ 5540	325/327	40		•
RE 35, 90 W	112	GP 32, 4.0 - 8.0 Nm	279	HED_ 5540	325/327	40		•
RE 35, 90 W	112	GP 42, 3 - 15 Nm	283	HED_ 5540	325/327	40		•
RE 35, 90 W	112	GP 32 S	301-303			40	•	
RE 35, 90 W	112	GP 32 S	301-303	HED_ 5540	325/327	40		•
RE 40, 150 W	114					45	107.1	
RE 40, 150 W	114	GP 42, 3 - 15 Nm	283			45	•	
RE 40, 150 W	114	GP 52, 4 - 30 Nm	287			45	•	
RE 40, 150 W	114			HED_ 5540	325/327	45		124.3
RE 40, 150 W	114	GP 42, 3 - 15 Nm	283	HED_ 5540	325/327	45		•
RE 40, 150 W	114	GP 52, 4 - 30 Nm	287	HED_ 5540	325/327	45		•

Technical Data

Max. permissible static torque at 20°C	0.4 Nm	Nominal voltage, smoothed		24 VDC ±10%
Mass inertia	10 gcm²	Resistance		R_{20} = 92.5 Ω ±6%
Max. permissible speed	16000 rpm	Duty cycle		100%
Weight	0.05 kg	Reaction time	– Coupling	≤ 13 ms
Ambient temperature range	-5…+85°C		– Opening	≤ 27 ms

Pin Allocation

Cable (AWG 26)	Designation
red	U_{Brake} + 24 VDC
blue	U_{Brake} GND
red	Motor+
black	Motor-
Min. cable length	350 mm

Brake AB 28 24 VDC, 0.4 Nm

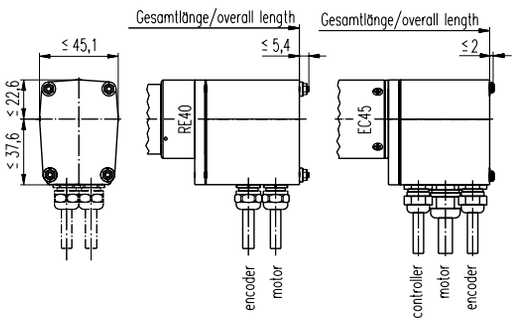

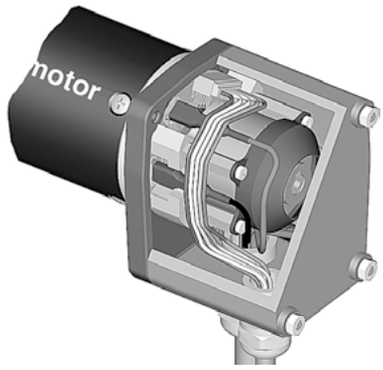

Important Information

- Permanent magnet - single-face brake for DC (dry operation). Braking in unpowered condition.
- Holding brake, prevents rotation of the shaft at standstill or with turned off motor power.
- Not suitable for dynamic braking.
- It is possible to lower the voltage applied to the brake after it has been energized, for the purpose of reducing heat loss.

maxon accessories

Stock program
Standard program
Special program (on request)

Part Numbers

228389	228390

Type

maxon Modular System

+ Motor	Page	+ Gearhead	Page	+ Sensor	Page	Overall length [mm] / • see Gearhead	
RE 40, 150 W	114					115.1	
RE 40, 150 W	114	GP 42, 3 - 15 Nm	283			•	
RE 40, 150 W	114	GP 52, 4 - 30 Nm	287			•	
RE 40, 150 W	114			HEDL 9140	331	135.6	
RE 40, 150 W	114	GP 42, 3 - 15 Nm	283	HEDL 9140	331	•	
RE 40, 150 W	114	GP 52, 4 - 30 Nm	287	HEDL 9140	331	•	
EC 45, 150 W	194						118.6
EC 45, 150 W	194	GP 42, 3 - 15 Nm	283				•
EC 45, 150 W	194	GP 52, 4 - 30 Nm	287				•
EC 45, 150 W	194			HEDL 9140	331		135.6
EC 45, 150 W	194	GP 42, 3 - 15 Nm	283	HEDL 9140	331		•
EC 45, 150 W	194	GP 52, 4 - 30 Nm	287	HEDL 9140	331		•
EC 45, 250 W	195						151.4
EC 45, 250 W	195	GP 42, 3 - 15 Nm	284				•
EC 45, 250 W	195	GP 52, 4 - 30 Nm	287				•
EC 45, 250 W	195	GP 62, 8 - 50 Nm	289				•
EC 45, 250 W	195			HEDL 9140	331		168.4
EC 45, 250 W	195	GP 42, 3 - 15 Nm	284	HEDL 9140	331		•
EC 45, 250 W	195	GP 52, 4 - 30 Nm	287	HEDL 9140	331		•
EC 45, 250 W	195	GP 62, 8 - 50 Nm	289	HEDL 9140	331		•

Technical Data

Max. permissible static torque at 20°C	0.4 Nm	Nominal voltage, smoothed		24 VDC ±10%
Mass inertia	10 gcm²	Resistance		R_{20} = 92.5 Ω ±6%
Max. permissible speed	16 000 rpm	Duty cycle		100%
Weight	0.05 kg	Reaction time	– Coupling	≤ 13 ms
Ambient temperature range	-5…+85°C		– Opening	≤ 27 ms

Pin Allocation

	Brake	from motor clamp	Designation
		RE 40	
Cable	green	(AWG 20)	U_{Brake} + 24 VDC
Cable	yellow	(AWG 20)	U_{Brake} GND
		EC 45	
Cable	red	No 4 (AWG 18)	U_{Brake} + 24 VDC
Cable	blue	No 5 (AWG 18)	U_{Brake} GND
Min. cable length			500 mm

Brake AB 32 24 VDC, 0.4 Nm

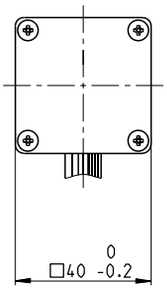

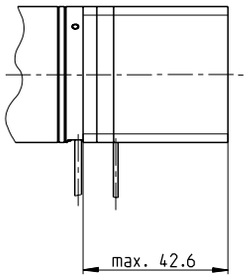

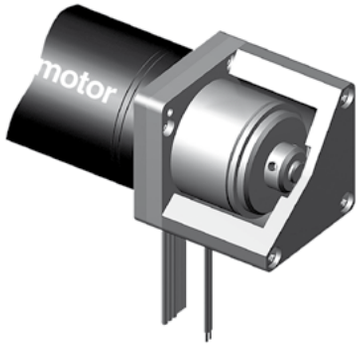

Important Information

- Permanent magnet – single-face brake for DC (dry operation). Braking in unpowered condition.
- Holding brake, prevents rotation of the shaft at standstill or with turned off motor power.
- Not suitable for dynamic braking.
- It is possible to lower the voltage applied to the brake after it has been energized, for the purpose of reducing heat loss.

Stock program
Standard program
Special program (on request)

Part Numbers

392335

Type

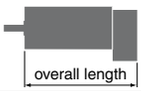

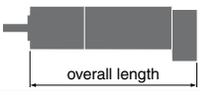

maxon Modular System

+ Motor	Page	+ Gearhead	Page	+ Sensor	Page	Overall length [mm] / • see Gearhead
EC 40, 170 W	193					122.7
EC 40, 170 W	193	GP 42, 3 - 15 Nm	283			•
EC 40, 170 W	193	GP 52, 4 - 30 Nm	287			•
EC 40, 170 W	193			HED_ 5540	326/328	141.1
EC 40, 170 W	193	GP 42, 3 - 15 Nm	283	HED_ 5540	326/328	•
EC 40, 170 W	193	GP 52, 4 - 30 Nm	287	HED_ 5540	326/328	•

Technical Data

Max. permissible static torque at 20°C	0.4 Nm	Nominal voltage, smoothed		24 VDC ±10%
Mass inertia	19 gcm^2	Resistance		R_{20} = 100 Ω ±7%
Max. permissible speed	10 000 rpm	Duty cycle		100%
Weight	0.1 kg	Reaction time	– Coupling	≤ 13 ms
Ambient temperature range	-40…+100°C		– Opening	≤ 24 ms

Pin Allocation

Cable (AWG 24)	Designation
red	U_{Brake} + 24 VDC
blue	U_{Brake} GND
Min. cable length	350 mm

Brake AB 41 24 VDC, 2.0 Nm

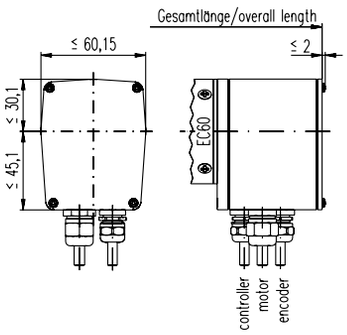

Important Information

- Permanent magnet – single-face brake for DC (dry operation). Braking in unpowered condition.
- Holding brake, prevents rotation of the shaft at standstill or with turned off motor power.
- Not suitable for dynamic braking.
- It is possible to lower the voltage applied to the brake after it has been energized, for the purpose of reducing heat loss.

Stock program
Standard program
Special program (on request)

Part Numbers

228998

Type

maxon Modular System

+ Motor	Page	+ Gearhead	Page	+ Sensor	Page	Overall length [mm] / • see Gearhead
EC 60, 400 W	196					190.9
EC 60, 400 W	196	GP 81, 20 - 120 Nm	290			•
EC 60, 400 W	196			HEDL 9140	331	214.9
EC 60, 400 W	196	GP 81, 20 - 120 Nm	290	HEDL 9140	331	•

Technical Data

Max. permissible static torque at 20°C	2.0 Nm	Nominal voltage, smoothed		24 VDC -10 ... +6%
Mass inertia	45 gcm²	Resistance		R_{20} = 72 Ω ±7%
Max. permissible speed	10 000 rpm	Duty cycle		100%
Weight	0.18 kg	Reaction time	– Coupling	≤ 2 ms
Ambient temperature range	-5…+85°C		– Opening	≤ 25 ms

Pin Allocation

	Brake	from motor clamp	Designation
Cable	red	No 4 (AWG 16)	U_{Brake} + 24 VDC
Cable	black	No 5 (AWG 16)	U_{Brake} GND
Min. cable length			500 mm

Brake AB 44 24 VDC, 2.5 Nm

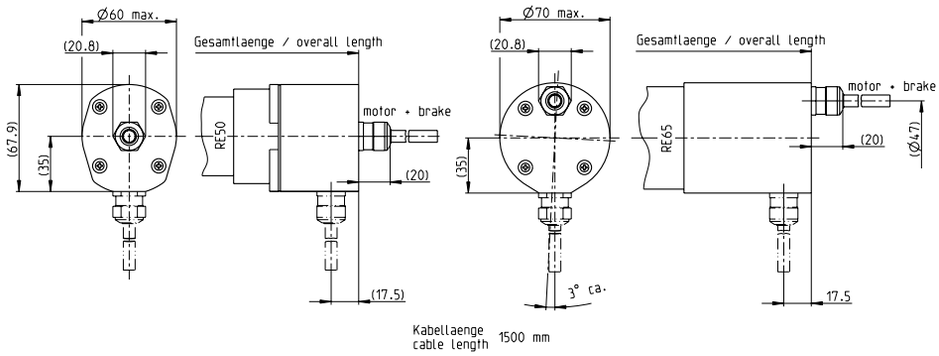

Important Information

- Permanent magnet – single-face brake for DC (dry operation). Braking in unpowered condition.
- Holding brake, prevents rotation of the shaft at standstill or with turned off motor power.
- Not suitable for dynamic braking.
- It is possible to lower the voltage applied to the brake after it has been energized, for the purpose of reducing heat loss.
- Protection: IP54

Stock program
Standard program
Special program (on request)

Part Numbers

Cable output axial	386052	385999
Cable output radial	386054	386000

Type

maxon Modular System

+ Motor	Page	+ Gearhead	Page	+ Sensor	Page	Overall length [mm] / • see Gearhead	
RE 50, 200 W	115					170.4	
RE 50, 200 W	115	GP 52, 4 - 30 Nm	288			•	
RE 50, 200 W	115	GP 62, 8 - 50 Nm	289			•	
RE 50, 200 W	115			HEDL 9140	332	183.4	
RE 50, 200 W	115	GP 52, 4 - 30 Nm	288	HEDL 9140	332	•	
RE 50, 200 W	115	GP 62, 8 - 50 Nm	289	HEDL 9140	332	•	
RE 65, 250 W	116						187.5
RE 65, 250 W	116	GP 81, 20 - 120 Nm	290				•
RE 65, 250 W	116			HEDL 9140	332		205.5
RE 65, 250 W	116	GP 81, 20 - 120 Nm	290	HEDL 9140	332		•

Technical Data

Max. permissible static torque at 20°C	2.5 Nm	Nominal voltage, smoothed		24 VDC ±10%
Mass inertia	90 gcm²	Resistance		R_{20} = 64 Ω ±7%
Max. permissible speed	10 000 rpm	Duty cycle		100%
Weight	0.19 kg	Reaction time	– Coupling	≤ 20 ms
Ambient temperature range	-40…+100°C		– Opening	≤ 35 ms

Pin Allocation

Cable (AWG 18)	Designation
white	Motor+
brown	Motor-
green	U_{Brake} + 24 VDC
yellow	U_{Brake} GND
Min. cable length	1490 mm

End Caps

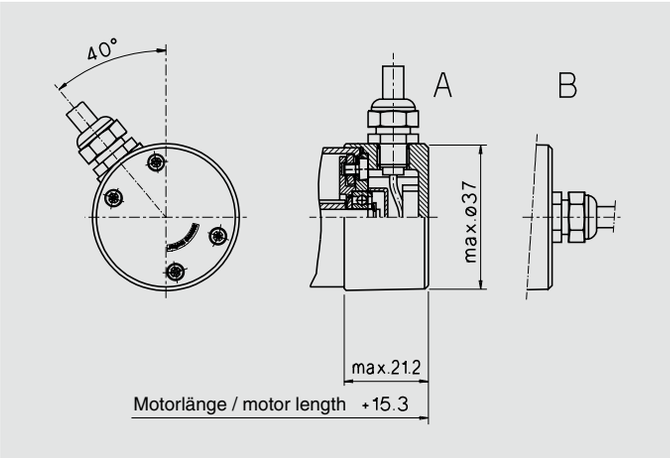

End cap for maxon DC motor RE 35 mm

Details for motor see page 112

- Plastic housing
- Protection to IP54
- With 500 mm cable, AWG 20 (2 × 0.5 mm²) other lengths on request!
- Radial or axial cable outlet
- Assembly only by maxon motor. The shaft must be shortened.

Pin Allocation

Cable No.	Color	Motor
1	black	+ Pol
2	black	– Pol

Part Numbers

Type number		Version/Item
137235	**A**	End cap with radial cable outlet (500 mm)
137234	**B**	End cap with axial cable outlet (500 mm)

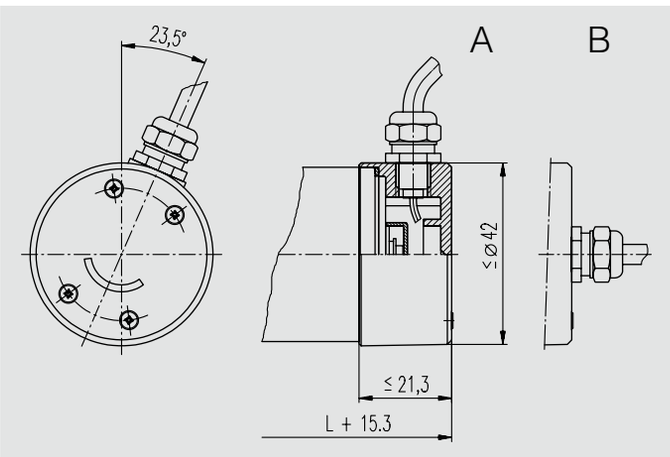

End cap for maxon DC motor RE 40 mm

Details for motor see page 114

- Plastic housing
- Protection to IP54
- With 500 mm cable, AWG 20 (2 × 0.5 mm²) other lengths on request!
- Radial or axial cable outlet
- Assembly only by maxon motor. The shaft must be shortened.

Pin Allocation

Cable No.	Color	Motor
1	black	+ Pol
2	black	– Pol

Part Numbers

Type number		Version/Item
232341	**A**	End cap with radial cable outlet (500 mm)
232343	**B**	End cap with axial cable outlet (500 mm)

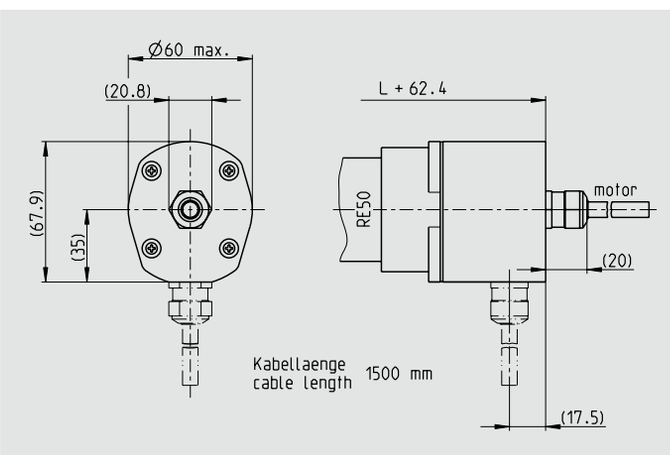

End cap for maxon DC motor RE 50 mm

Details for motor see page 115

- Aluminium housing
- Protection to IP54
- With 1500 mm cable, AWG 18 (2 × 1.0 mm²) other lengths on request!
- Radial or axial cable outlet
- Assembly only by maxon motor.

Pin Allocation

Cable No.	Color	Motor
1	white	+ Pol
2	brown	– Pol

Part Numbers

Type number		Version/Item
386056	**A**	End cap with radial cable outlet (1500 mm)
386055	**B**	End cap with axial cable outlet (1500 mm)

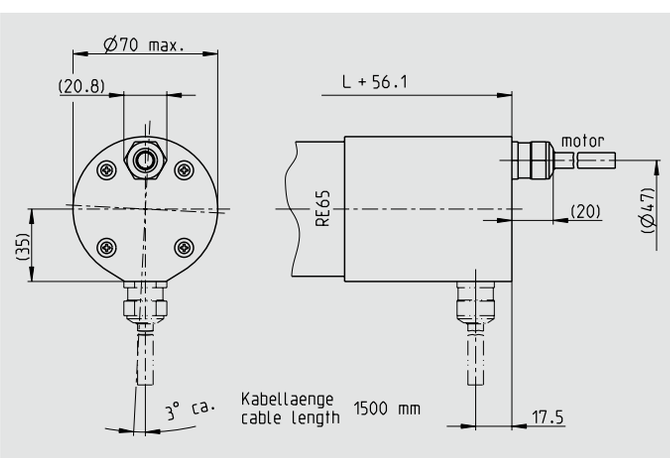

End cap for maxon DC motor RE 65 mm

Details for motor see page 116

- Aluminium housing
- Protection to IP54
- With 1500 mm cable, AWG 18 (2 × 1.0 mm²) other lengths on request!
- Radial or axial cable outlet
- Assembly only by maxon motor.

Pin Allocation

Cable No.	Color	Motor
1	white	+ Pol
2	brown	– Pol

Part Numbers

Type number		Version/Item
386004	**A**	End cap with radial cable outlet (1500 mm)
386003	**B**	End cap with axial cable outlet (1500 mm)

For your personal notes

P [mW]	I [mA]	η [%]	n [rpm, min⁻¹]	M [mNm]

maxon ceramic

maxon ceramic

High performance industrial ceramic is used primarily for applications where customary materials would fail. maxon ceramic products include: precision spindles, axles and shafts, customer-specific components for microtechnology, and scratch-resistant housing components.

Innovative high-tech ceramic components	380–382
Material properties	383–385
Standard spindles	386
System-specific nuts	387
Standard axles	388–389

Smooth-running and wear-proof.

Ceramic precision spindles.

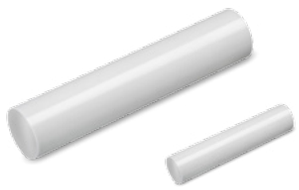

Resilient and long-lasting.

Ceramic axles for power tools.

Complex shapes for microtechnology.

Ceramic components for miniaturized applications.

Protection against high temperatures and aggressive media.

Ceramic sensor housing for measuring equipment.

Shiny, scratch-resistant surfaces.

Earphone housing made of black ceramic.

Experience and innovation.

maxon ceramic.

maxon ceramic in Sexau, Germany, is part of maxon motor, the global leading provider of high-precision drive systems, based in Switzerland. maxon ceramic has extensive knowledge and more than 20 years of experience in the field of powder injection molding. Customized ceramic and metallic components are produced CIM (Ceramic Injection Molding) and MIM (Metal Injection Molding).

In addition to our extensive standard program, we also offer components manufactured to customer specifications. We not only develop components for drive technology and the watch industry, but also high-precision spindles made of high-performance ceramic. Our development and engineering department use cutting-edge CAD technology and make use of the finite element calculation method.

For additional information, contact your local maxon representative found at:
contact.maxonmotor.com

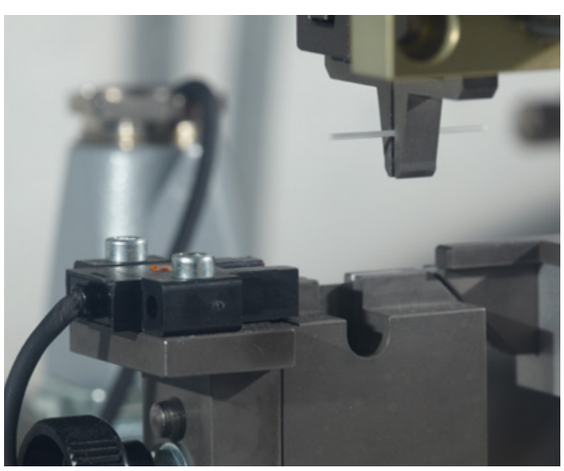

Complex shapes for microtechnology.

Ceramic pawls in automatic watches.

In clockwork, the tiny mechanical parts have to be machined with utmost precision for the clockwork to run reliably. With ceramic components, the meshing parts maintain precision over life spans never achieved before.

Protection against high temperatures and aggressive media.

Ceramic sensor housing in a flow meter.

Ceramic resists harsh conditions. As a sensor housing, it shows its resistance against high temperatures, abrasive dust in the mass flow and chemically aggressive condensate. The low heat conductance protects the electronics inside of the sensor. This passive behavior towards electric and magnetic fields make it possible to use electronic sensors.

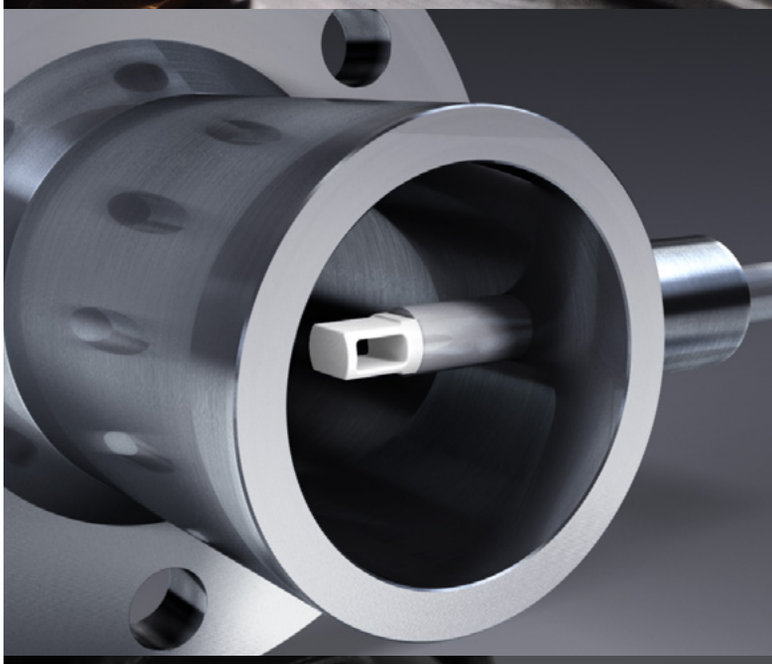

Shiny, scratch-resistant surfaces.

Ceramic housing for earphones.

Ceramic surfaces feature scratch-resistance and shine. The continuous development of our polishing and shaping processes combines aesthetic design and functionality in a very special way. Ceramic housings protect the high-quality technical components inside and give the products a long-lasting high-quality exterior.

Zirconia.

Zirconia is a high-performance industrial ceramic. It is used primarily for applications where customary materials would fail. These applications include wear optimization, as well as non-magnetic applications in a vacuum and in medical applications. Zirconia measures up to these tasks even while meeting high requirements for chemical and thermal stability as well as thermal and electrical insulation.

Zirconia shares many of the properties of steel (elasticity modulus of approx. 200 000 N/mm², bending strength of >800 N/mm², expansion co-efficient of 10 x 10^{-6} 1/K). However, at 1350 HV, it is many times harder than steel. This is the main benefit when using ceramics and surfaces are virtually wearproof.

General material properties.

Bending strength	>800 N/mm²
Elasticity modulus	2 x 10^5 N/mm²
Density	≥6.03 g/cm³
Hardness	1350 HV
Heat expansion coefficient	10 x 10^{-6} 1/K
Thermal conductivity	2 W/mK
Dielectric constant	22 [ ]
Electrical resistance	10^8 Ωm

Precision spindles made of ceramic.

The maxon cgs spindle – smooth-running and wear-proof.

Ground ceramic surfaces are extremely suitable for sliding movements. Our ceramic spindles with specially developed cgs surface (ceramic glide surface) work almost completely without slip-stick effect. Ceramic components can be positioned easily, even in areas with strong electric fields or high vacuum.

Due to the high hardness of the ceramic, the maxon cgs spindles achieve an exceptionally long life span, especially in the case of dynamic operation. All these properties make ceramic spindles a better alternative to customary steel spindles and ball screws.

cgs surface for ceramic spindles.

To use this high-strength material for spindles, maxon ceramic has designed the spindle flanks with a special cgs surface structure. The result is an unprecedented wear resistance and extremely high efficiency.

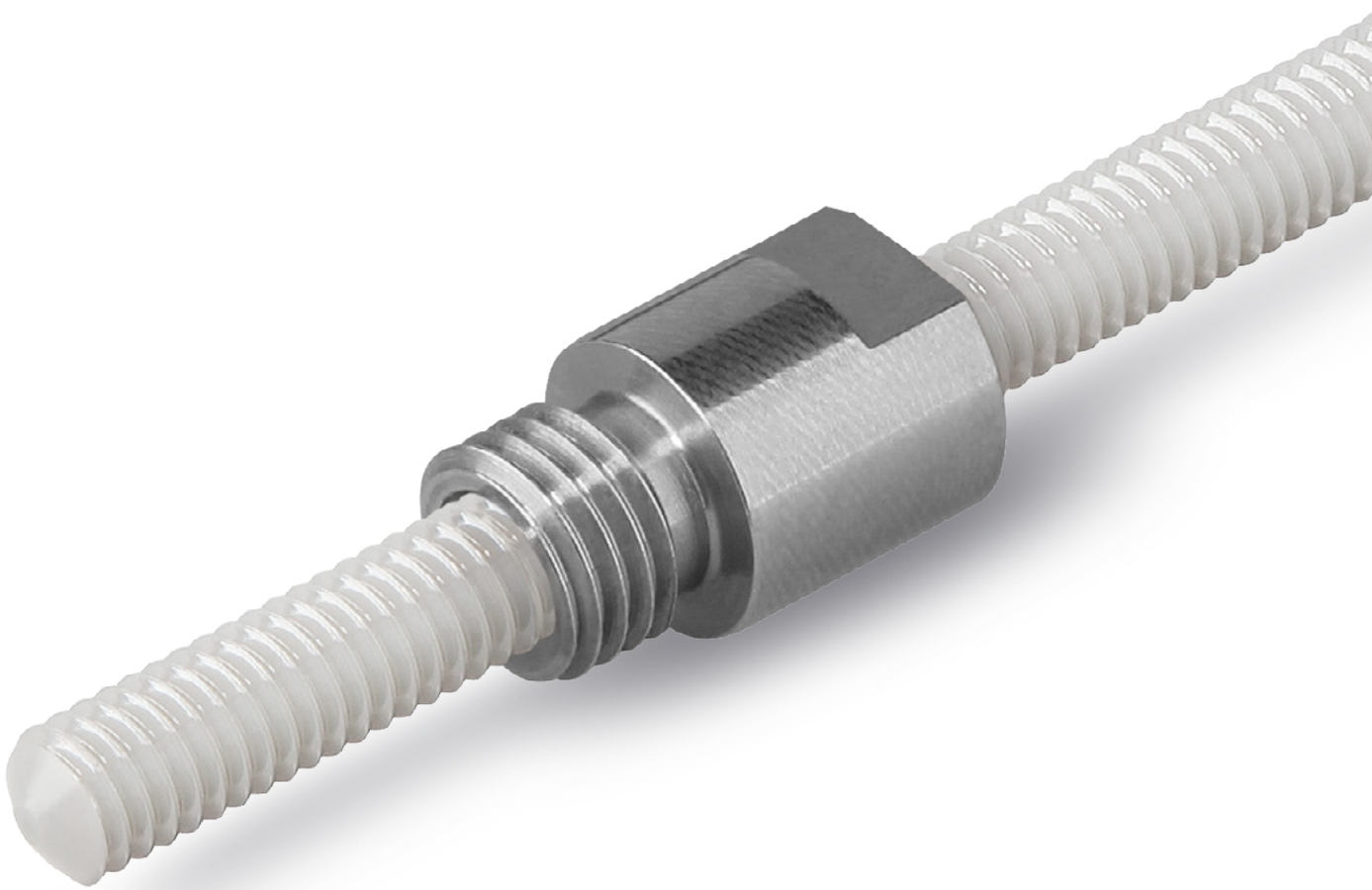

Ceramic as spindle material makes it possible to use the spindles in:

– Applications with high power transmission
– Applications with long life span
– High temperature environments
– Magnetic and electric fields
– Chemically aggressive environments
– Cleanrooms
– High vacuum technologies

Benefits of ceramic spindles:

– Excellent sliding characteristics
– Extreme wear resistance
– Significant increase in life span
– Excellent efficiency
– Almost non-existent stick-slip effect
– Thermally isolating
– Spindles resistant to thermal stress (~800°C)
– Electrically insulating
– No warming up in induction fields
– Chemically stable
– Corrosion-free
– Strength, Elasticity modulus and thermal expansion similar to that of steel

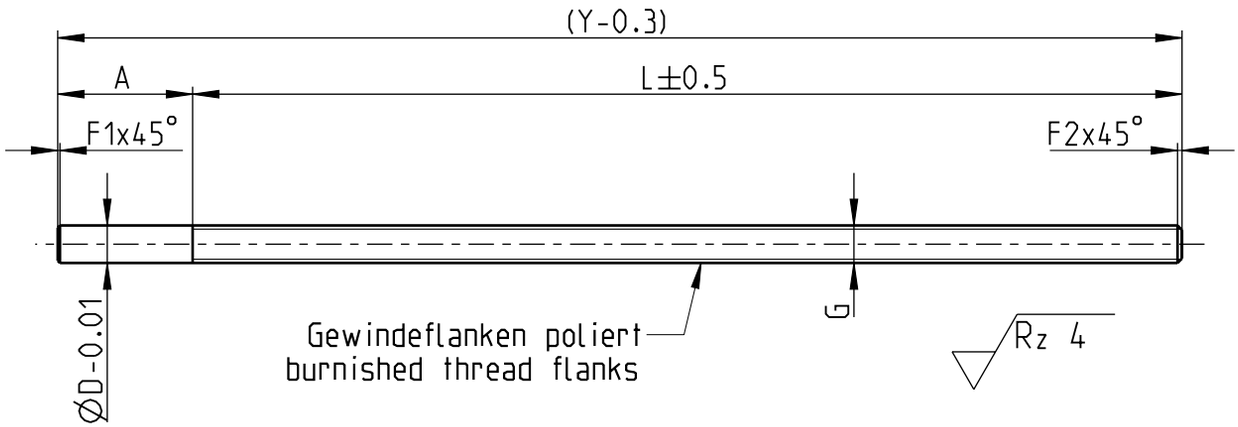

maxon standard spindles.

Ceramic spindles (in white).

Size	Color	Part no.	D	A max.	L max.	F1	F2	(Y) max.
M2	white	426634	2.0	18	102	0.3	0.3	120
M2.5	white	426707	2.5	18	132	0.3	0.3	150
M3	white	426715	3.0	18	132	0.4	0.4	150
M4	white	426717	4.0	18	132	0.5	0.5	150
M5	white	426730	5.0	18	132	0.6	0.6	150
M6	white	426740	6.0	18	232	0.7	0.7	250
M8	white	426763	8.0	18	232	0.8	0.8	250
M10	white	426783	10.0	18	232	1.0	1.0	250

Ceramic spindles (in black).

Size	Color	Part no.	D	A max.	L max.	F1	F2	(Y) max.
M2	black	427107	2.0	18	102	0.3	0.3	120
M2.5	black	427186	2.5	18	132	0.3	0.3	150
M3	black	427199	3.0	18	132	0.4	0.4	150
M4	black	427209	4.0	18	132	0.5	0.5	150
M5	black	427216	5.0	18	132	0.6	0.6	150
M6	black	427221	6.0	18	232	0.7	0.7	250
M8	black	427231	8.0	18	232	0.8	0.8	250
M10	black	427232	10.0	18	232	1.0	1.0	250

System-specific nuts.

The right nut for each application.

In combination with ceramic spindles, nuts are available in steel, brass, bronze or plastic. For applications with very high demands to the life span, we use CVD-coated steel nuts.
The nuts profit from the special maxon cgs surface of the spindles, this results in significantly longer life spans than those offered by metal spindles.
For backlash-free applications, we offer preloaded nuts. For applications with strong magnetic or electric fields, plastic nuts are preferred. In applications involving movements with little load, the nuts may be operated without the lubricant.

Individual solutions.

In addition to our standard program, we also offer spindles and nuts tailored to your application needs. We provide spindles with fine thread, special leads, as well as double-thread spindles. A customer-specific integration with your bearing system is also possible. Please contact us if you are interested in learning more.

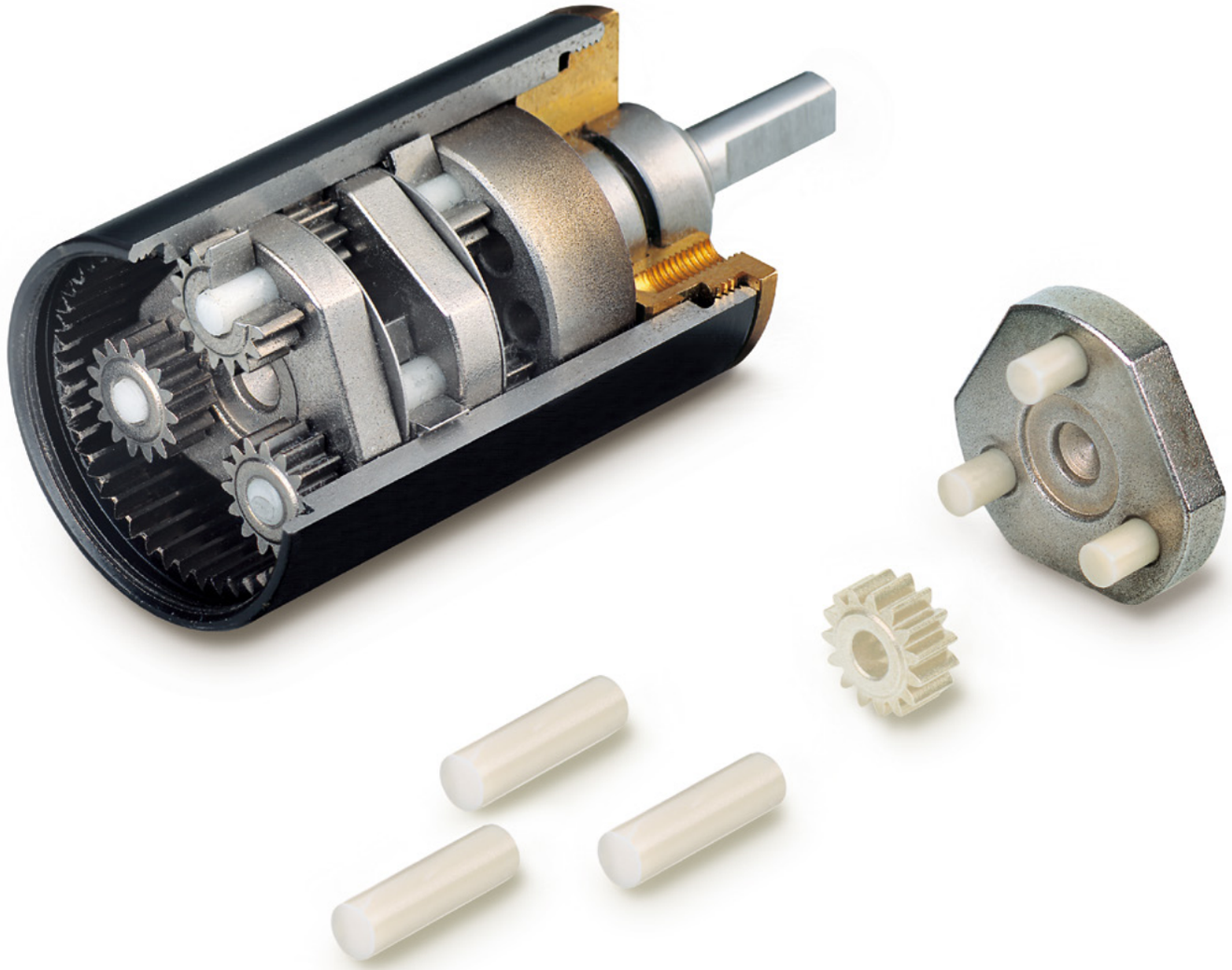

How can the life span of planetary gearheads be increased?

Planetary gearheads have existed for centuries; their simple structure makes it possible to transmit high torque in small spaces. To increase the life span, maxon motor increased the precision of the components and set new benchmarks for efficiency and life span by using a new material.

The use of ceramic axles in our gearheads led to a separate program for ceramic rods. Ceramic axles may be used in:

– Linear guides
– Positioning pins
– Joints
– Rollers

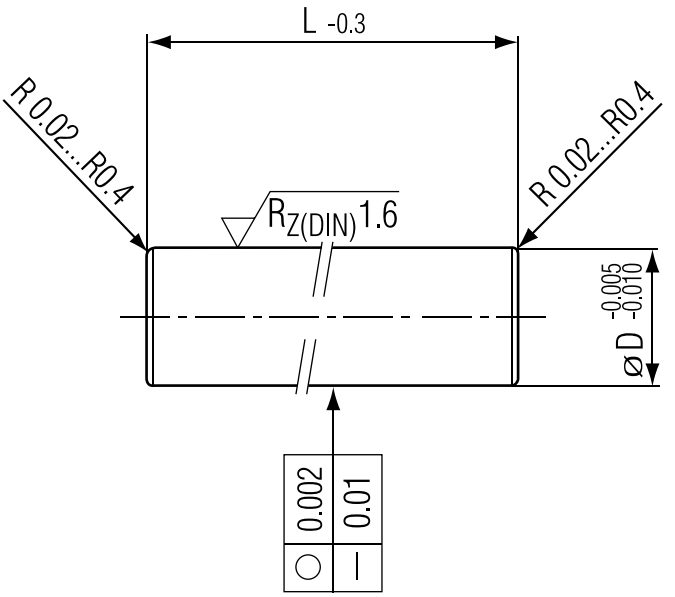

maxon standard axles.

Resilient and long-lasting.

Ceramic is an excellent material for small dynamic systems. When the miniaturization of rolling bearings has reached its limits and milling of complex geometries gets difficult, ceramic as material offers decisive benefits. With its excellent sliding characteristics, the high wear resistance and the ability to shape components by means of injection molding, ceramic outperforms conventional solutions.

Ø D	L = 2.4	L = 6.4	L = 7.4	L = 10.6	L = 13.8	L = 15	L = 35	L = 40	L = 60	L = 70	L = 120
0.8	255899	255900	255901	255902	255903	255904	255905[4]	348501[4]	348502[5]	348503[6]	
1.0	255891	255892	255893	255894	255895	255896	255898[4]	348498[4]	348499[5]	348500[6]	
1.5	255883	255884	255885	255886	255887	255888	255889[4]	255890[4]	255792[5]	255793[6]	
2.0	255872	255873	348693	255875	255876	255877	255879	255880	255881	255882	
2.5	255864	143825[3)7)]	255866	255867	255868	255869	255870	255871	346621	348288	
3.0	255856	255857	255858	255859	255860	255861	255862	255863	346619	346620	
4.0	255845	255846	166875[1)3)7)]	137962[1)3)7)]	255849	255850	255851	255853	255854	255791	255787[5]
5.0	255833	255834	255835	255836	255837	255838	255839	255840	255841	255842	255843[5]
5.5	255818	255819	255820	255786	205063[2)3)7)]	255825	255826	255827	255828	255830	255831[5]
6.0	255806	255807	255808	255809	255810	255811	255812	255813	255814	255815	255816[5]
8.0	255794	255795	255796	255797	255798	255799	255800	255801	255802	255803	255804[5]

[1] Diameter tolerance deviation: -0.008/-0.013
[2] Diameter tolerance deviation: -0.013/-0.018
[3] Rounded edges R 0.3 ± 0.1
[4] Straightness tolerance deviation: 0.02 mm
[5] Straightness tolerance deviation: 0.03 mm
[6] Straightness tolerance deviation: 0.04 mm
[7] Roundness tolerance deviation: 0.003 mm

www.maxonceramic.com

How to find **maxon motor**

Headquarters

maxon motor ag
Brünigstrasse 220
P.O. Box 263
6072 Sachseln
Switzerland
Phone: +41 (41) 666 15 00
Fax: +41 (41) 666 16 50
E-mail: info@maxonmotor.com
www.maxonmotor.com

maxon Manufacturing Companies

maxon motor GmbH
Untere Ziel 1
79350 Sexau
Germany
Phone: +49/7641 - 91 14 -0
Fax: +49/7641 - 91 14 -14

maxon motor GmbH
Untere Ziel 1
79350 Sexau
Germany
Phone: +49/7641 - 91 14 -179
Fax: +49/7641 - 91 14 -655
E-mail: ceramic@maxonmotor.com
www.maxonceramic.com

maxon motor hungary kft
Tartu u. 4.
8210 Veszprém
Hungary
Phone: +36 14088000
Fax: +36 14088792
E-mail: mmh-info@maxonmotor.com

maxon motor manufacturing Co., Ltd.
10 Doraemal-gil, Sojeong-myeon
Sejong, Korea 339-872
Phone: +82 44 998 3441
Fax: +82 44 998 7800
E-mail: info.kr@maxonmotor.com
www.maxonmotor.co.kr

Sales Switzerland

maxon motor ag
P.O. Box 263
6072 Sachseln
Switzerland
Phone: +41 (41) 666 17 28
Fax: +41 (41) 666 16 16
E-mail: sales-swiss@maxonmotor.com
www.maxonmotor.ch

Switzerland West (ZIP 1000–3250)
maxon motor ag
P.O. Box 263
6072 Sachseln
Switzerland
Phone: +41 (41) 662 44 73
Fax: +41 (41) 666 16 16
Mobile: +41 (78) 793 88 72
E-mail: didier.picamoles@maxonmotor.com

Switzerland Central (ZIP 3251–3999, 6000–6999)
maxon motor ag
P.O. Box 263
6072 Sachseln
Switzerland
Phone: +41 (41) 662 42 39
Fax: +41 (41) 666 16 16
Mobile: +41 (79) 855 20 68
E-mail: stefan.brun@maxonmotor.com

Switzerland North (ZIP 4000–5999)
maxon motor ag
P.O. Box 263
6072 Sachseln
Switzerland
Phone: +41 (41) 666 15 67
Fax: +41 (41) 666 16 16
Mobile: +41 (79) 419 15 60
E-mail: horst.vonspinn@maxonmotor.com

Switzerland East (ZIP 7000–9999)
maxon motor ag
P.O. Box 263
6072 Sachseln
Switzerland
Phone: +41 (41) 666 16 43
Fax: +41 (41) 666 16 16
Mobile: +41 (79) 642 50 15
E-mail: salvatore.coroniti@maxonmotor.com

maxon motor – represented worldwide

Europe

maxon Sales Companies

Austria, Hungary, Slovenia, Romania
Kwapil & Co GmbH
Kammelweg 9
1210 Wien
Austria
Phone: +43/1 - 278 85 85
Fax: +43/1 - 278 85 86
E-mail: verkauf@kwapil.com
www.kwapil.com

Belgium/Luxembourg
maxon motor benelux B.V.
Mechelen Campus
Schaliënhoevedreef 20 C
2800 Mechelen
Belgium
Phone: +32/15 - 20 00 10
Fax: +32/15 - 27 47 71
E-mail: info@maxonmotor.be
www.maxonmotor.be

Czech Republic, Slovakia, Poland
Kwapil & Co. Gesellschaft m.b.H.
Hlavní 1054/131
624 00 Brno
Czech Republic
Phone: +420 541 211 538
Fax: +420 541 217 467
E-mail: sales@kwapil.com
www.kwapil.cz

Denmark
DJ Stork Drives ApS
Industrivej 12
2605 Brøndby
Denmark
Phone: +45 8988 2416
Mobile: +45 5353 5051
E-mail: ulrik.eriksen@storkdrives.se
www.storkdrives.dk

Finland
DJ Stork Drives OY
Mäenalantie 773
24260 Salo
Finland
Phone: +46 8 635 60 00
E-mail: jyrki.leinonen@storkdrives.fi
www.storkdrives.fi

Germany (Head Office)
maxon motor gmbh
Truderinger Strasse 210
81825 Munich
Germany
Phone: +49/89 - 42 04 93 -0
Fax: +49/89 - 42 04 93 -40
E-mail: info@maxonmotor.de
www.maxonmotor.de

Great Britain
maxon motor uk ltd
Maxon House
Hogwood Lane, Finchampstead
Berkshire, RG40 4QW
Great Britain
Phone: +44 (0) 1189 733337
Fax: +44 (0) 1189 737472
E-mail: salesuk@maxonmotor.com
www.maxonmotor.co.uk

Italy
maxon motor italia S.r.l.
Società Unipersonale
Via Sirtori 35
20017 Rho MI
Italy
Phone: +39 02 93580588
Fax: +39 02 93580473
E-mail: info.it@maxonmotor.com
www.maxonmotor.it

Netherlands
maxon motor benelux B.V.
Josink Kolkweg 38
7545 PR Enschede
Netherlands
Phone: +31/53 - 486 47 77
Fax: +31/53 - 486 47 88
E-mail: info@maxonmotor.nl
www.maxonmotor.nl

Norway
DJ Stork Drives AS
Postboks 13
Storgata 15
2711 Gran
Norway
Phone: +47/6199 3001
Mobile: +47/9400 2990
E-mail: arve.stensrud@storkdrives.no
www.storkdrives.no

Spain (Madrid)
maxon motor ibérica s.a.
C/ Polo Norte nº 9
28850 Torrejón de Ardoz
Spain
Phone: +34/91 - 656 49 73
Fax: +34/91 - 656 48 72
E-mail: miguel.cano@maxonmotor.com
www.maxonmotor.es

Spain (Barcelona)
maxon motor ibérica s.a.
Vía Massagué 26 4º 1ª
08201 Sabadell
Spain
Phone: +34/93 - 715 69 52
Fax: +34/93 - 725 73 59
E-mail: jordi.more@maxonmotor.com
www.maxonmotor.es

Spain (La Rioja)
maxon motor ibérica s.a.
C/ General Vara del Rey, 9 5º K
26002 Logroño
Spain
Phone: +34/941 23 65 91
Fax: +34/941 23 65 13
E-mail: juan.ruiz@maxonmotor.com
www.maxonmotor.es

Sweden
DJ Stork Drives AB
Box 1158
Solna Strandväg 116
171 54 Solna
Sweden
Phone: +46/8 - 635 60 00
Fax: +46/8 - 635 60 01
E-mail: info@storkdrives.se
www.storkdrives.se

maxon Sales Agents

France
mdp SAS
21, Porte du Grand Lyon, Neyron
01707 Miribel Cedex
France
Phone: +33/472 - 018 300
Fax: +33/472 - 018 309
E-mail: mdpcontact@mdpmotor.com
www.mdpmotor.fr

Russia
Aviton JSC
Aptekarskiy prospect, 6 office 710
197376 St. Petersburg
Russia
Phone: +7-812- 702 1001
Fax: +7-812- 702 1148
E-mail: sales@aviton.spb.ru
www.aviton.spb.ru

Turkey
Elsim Elektroteknik Sistemler A.Ş.
Yeşilce Mah. Göktürk Cad.
Çeşni Sok. No:4
34418 4. Levent - Istanbul
Turkey
Phone: +90 (212) 282 75 80 Pbx.
Fax: +90 (212) 282 75 81
E-mail: elsim@elsim.com
www.elsim.com

America

maxon Sales Companies

USA (East Coast)
maxon precision motors, inc.
101 Waldron Road
Fall River, MA 02720, USA
Phone: +1/508 - 677 0520
Fax: +1/508 - 677 0530
E-mail: info@maxonmotorusa.com
www.maxonmotorusa.com

USA (West Coast)
maxon precision motors, inc.
San Mateo Centre
1820 Gateway Drive, Suite 370
San Mateo, CA 94404, USA
Phone: +1/650-524-8822
Fax: +1/650-372-9395
E-mail: info@maxonmotorusa.com
www.maxonmotorusa.com

maxon Sales Agents

Brazil
Treffer Ltda.
Av. Protásio de Oliveira Penna 366 / 101
Cep 30575-360 Bairro Buritis
Belo Horizonte – MG
Brazil
Phone: +55 31 3378 6222
Fax: +55 31 3378 6222
E-mail: motores@treffer.com.br
www.treffer.com.br

Canada
Electromate Industrial Sales Ltd.
4300 Steeles Avenue West,
Unit #39
Woodbridge, Ontario L4L 4C2
Canada
Phone: +1/877 737 8698
Fax: +1/877 737 8699
E-mail: sales@electromate.com
www.electromate.com

Australia

maxon Sales Companies

Australia
maxon motor australia Pty Ltd
Unit 4 / 22 Leighton Place
Hornsby NSW 2077
Australia
Phone: +61 2 9476 4777
Fax: +61 2 9476 4866
E-mail: info.au@maxonmotor.com
www.maxonmotor.com.au

Africa

maxon Sales Agents

South Africa
DNH TRADESERVE CC
P.O. Box 31151
1684 Kyalami
South Africa
Phone: +27 11 468 2722
Fax-mail: +27 86 509 6714
E-mail: info@dnhtrade.co.za

Asia

maxon Sales Companies

China
maxon motor (Suzhou) Co., Ltd.
5F, Block 1, No. 1128, East Jiangxing Road,
Wujiang Economic Developing Zone,
215200 Suzhou, Jiangsu Province
China
Phone: +86/512-8207 9287
Fax: +86/512-8207 9761
E-mail: info@maxonmotor.com.cn
www.maxonmotor.com.cn

India
maxon precision motor India Pvt. Ltd.
#4, Subhodayam, 3rd Floor
New B.E.L. Road, R.M.V. 2nd stage
Bangalore – 560 094
India
Phone: +91 80417 34132
Fax: +91 80416 12703
Mobile: +91 95387 71755
E-mail: info.in@maxonmotor.com
www.maxonmotor.in

Japan
maxon japan corporation
5-1-15 Shinjuku
Shinjuku-Ku
Tokyo 160-0022
Japan
Phone: +81/3 - 3350 42 61
Fax: +81/3 - 3350 42 30
E-mail: info@maxonjapan.co.jp
www.maxonjapan.co.jp

Korea
maxon motor Korea Co., Ltd.
27 Banpo-daero 14-gil, Seocho-gu,
Seoul, Korea 137-876
Phone: +82 2 3486 3441
Fax: +82 2 3486 8836
E-mail: info.kr@maxonmotor.com
www.maxonmotor.co.kr

Taiwan
maxon motor Taiwan Co. Ltd.
8F.-8 No. 16, Lane 609, Sec. 5
Chongxin Rd., Sanchong Dist.,
New Taipei City 241
Taiwan (R.O.C.)
Phone: +886-2-2999-3558
Fax: +886-2-2999-7268
E-mail: edward.wang@maxonmotor.com
www.maxonmotor.com.tw

maxon Sales Agents

Hong Kong
Servo Dynamics (H.K.) Ltd.
Unit 8, 2/F, Yuen Long Trading Centre,
33 Wang Yip Street West, Yuen Long,
N.T. Hong Kong
Phone: +852/2409 9986
Fax: +852/2409 7872
E-mail: sales@servodynamics.com.hk

Israel
Electrondart Ltd.
9 Ben Zion Gellis St.
Segula Industrial Area
Petach-Tikva 4927909
Israel
Phone: +972 (3) 931 4447
Fax: +972 (3) 930 2867
E-mail: sales@e-dart.co.il
www.electrondart.com

Malaysia
Servo Engineering Sdn. Bhd.
No. 15 G, Ground Floor, Highway Center,
Jalan 51/205,
46050 Petaling Jaya,
Selangor Darul Ehsan
Malaysia
Phone: +603-7782 3540
Fax: +603-7784 1013
E-mail: lai@servo.com.my
www.servo.com.my

Singapore
Servo Dynamics Pte. Ltd.
No. 10 Kaki Bukit Road 1
#01-30 Kaki Bukit Industrial Park
416175 Singapore
Phone: +65/6844 0288
Fax: +65/6844 0070
E-mail: servodynamics@servo.com.sg
www.servo.com.sg

Thailand
Servo Dynamics (Thailand) Co. LTD
52/210 Moo 2, Soi Wadnamdaeng, Srinakarin Rd.
10540 Bangkaew Bangplee Samutprakarn
Thailand
Phone: +66 2 753 56 25
Fax: +66 2 753 56 50
E-mail: info@servoline.com
www.servoline.com

MORE CONFIGURATION OPTIONS

The maxon family of configurable X drives is growing.
Motor, gearhead and encoder tailored to your needs.

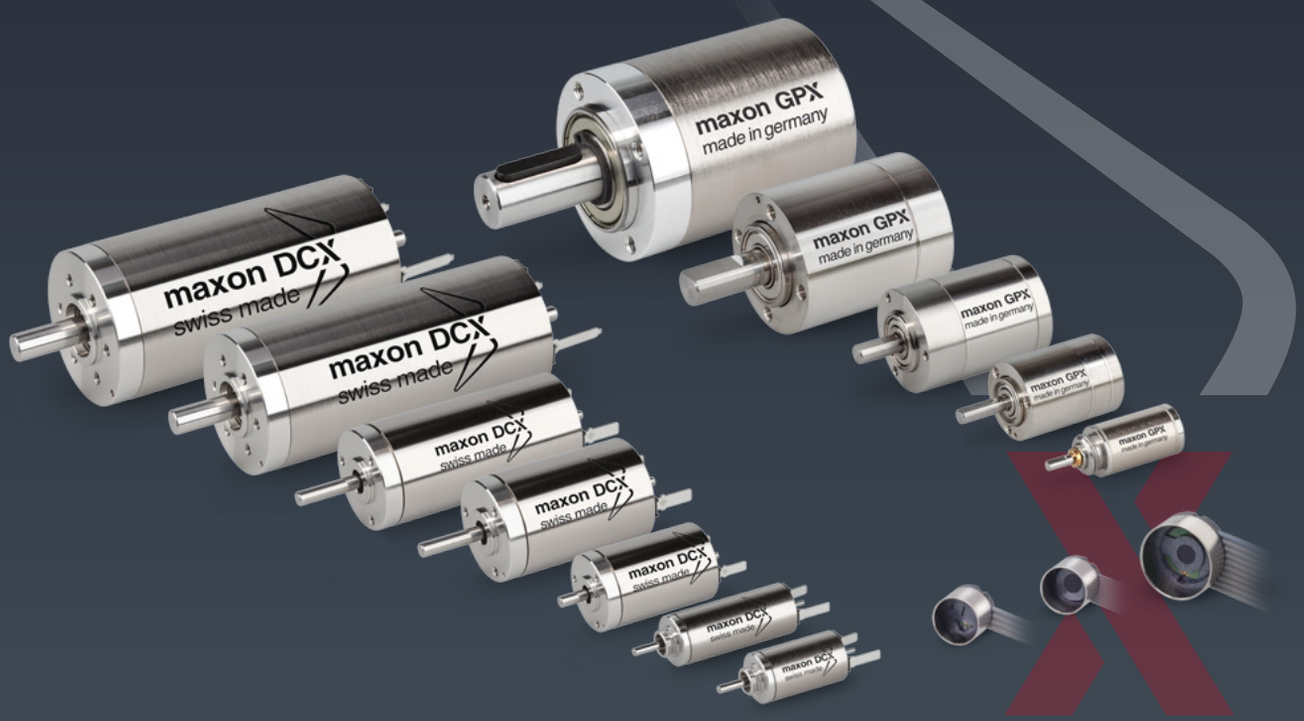

dcx.maxonmotor.com

Pages 51–76

www.maxonmotor.com

maxon motor

driven by precision