SKU:SEN0114 (https://www.dfrobot.com/product-599.html)

(https://www.dfrobot.com/product-599.html)

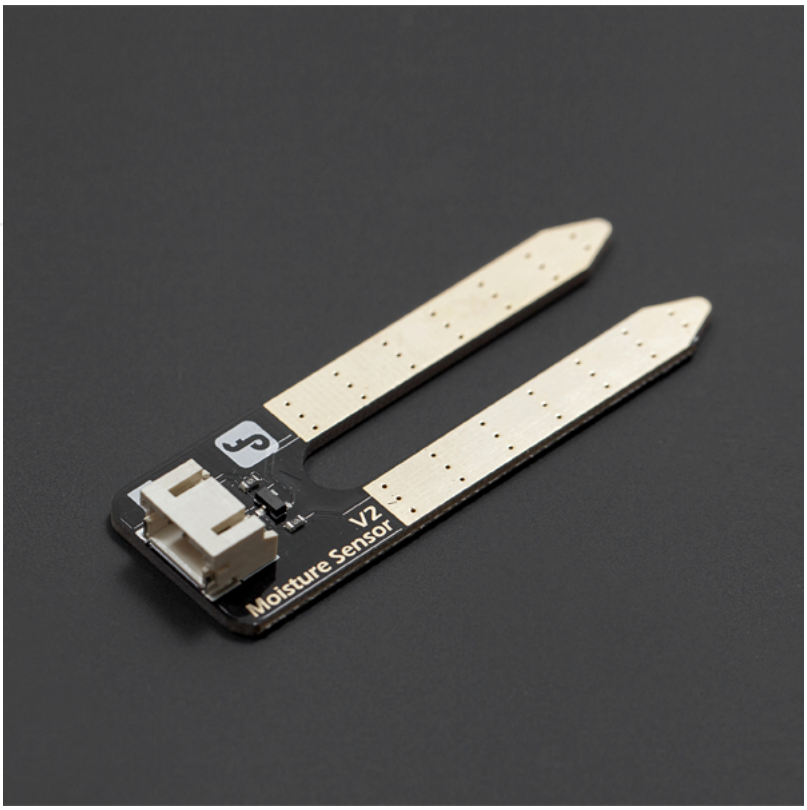

Introduction

This **Gravity: Analog Soil Moisture Sensor For Arduino** (https://www.dfrobot.com/product-599.html) can read the amount of moisture present in the soil surrounding it. It's a low tech sensor, but ideal for monitoring an urban garden or your pet plant's water level. This is a must have tool for a connected garden!

This **moisture sensor** (https://www.dfrobot.com/category-64.html) uses the two probes to pass current through the soil, and then it reads that resistance to get the relative moisture level. More water makes the soil conduct electricity more easily (less resistance), while dry soil conducts electricity poorly (more resistance).

It can be helpful to remind you to water your indoor plants or to monitor the soil moisture in your garden.

Specification

- Power supply: 3.3v or 5v
- Output voltage signal: 0~4.2v
- Current: 35mA
- Pin definition:
  - Analog output(Blue wire)
  - GND(Black wire)
  - Power(Red wire)
- Size: 60x20x5mm
- Value range:
  - 0 ~300 : dry soil

- 0~300 : dry soil
- 300~700 : humid soil
- 700~950 : in water

Tutorial

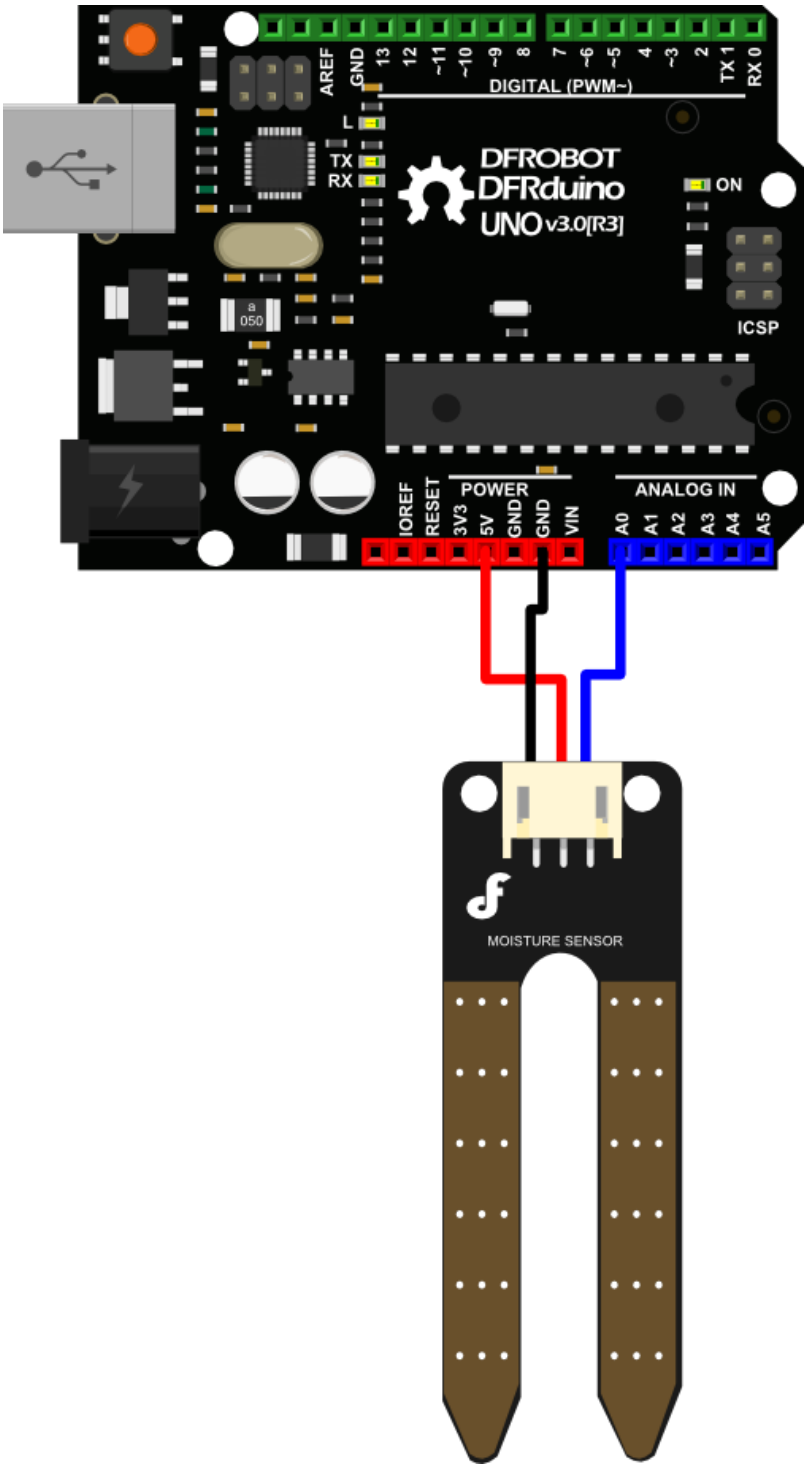

Requirements

- **Hardware**
  - DFRduino UNO R3 (https://www.dfrobot.com/product-838.html) (or similar) x 1
  - Analog Soil Moisture Sensor For Arduino (https://www.dfrobot.com/product-599.html) x

1

- **Software**
  - Arduino IDE (https://www.arduino.cc/en/software)

Sample Code

```
/*
  # Example code for the moisture sensor
  # Editor      : Lauren
  # Date        : 13.01.2012
  # Version     : 1.0
  # Connect the sensor to the A0(Analog 0) pin on the Arduino board

  # the sensor value description
  # 0  ~300     dry soil
  # 300~700     humid soil
  # 700~950     in water
*/

void setup(){

  Serial.begin(57600);

}

void loop(){

  Serial.print("Moisture Sensor Value:");
  Serial.println(analogRead(A0));
  delay(100);

}
```

Expected Results

Open the Arduino Serial Monitor, and choose its baud rate 57600 as set in the code.

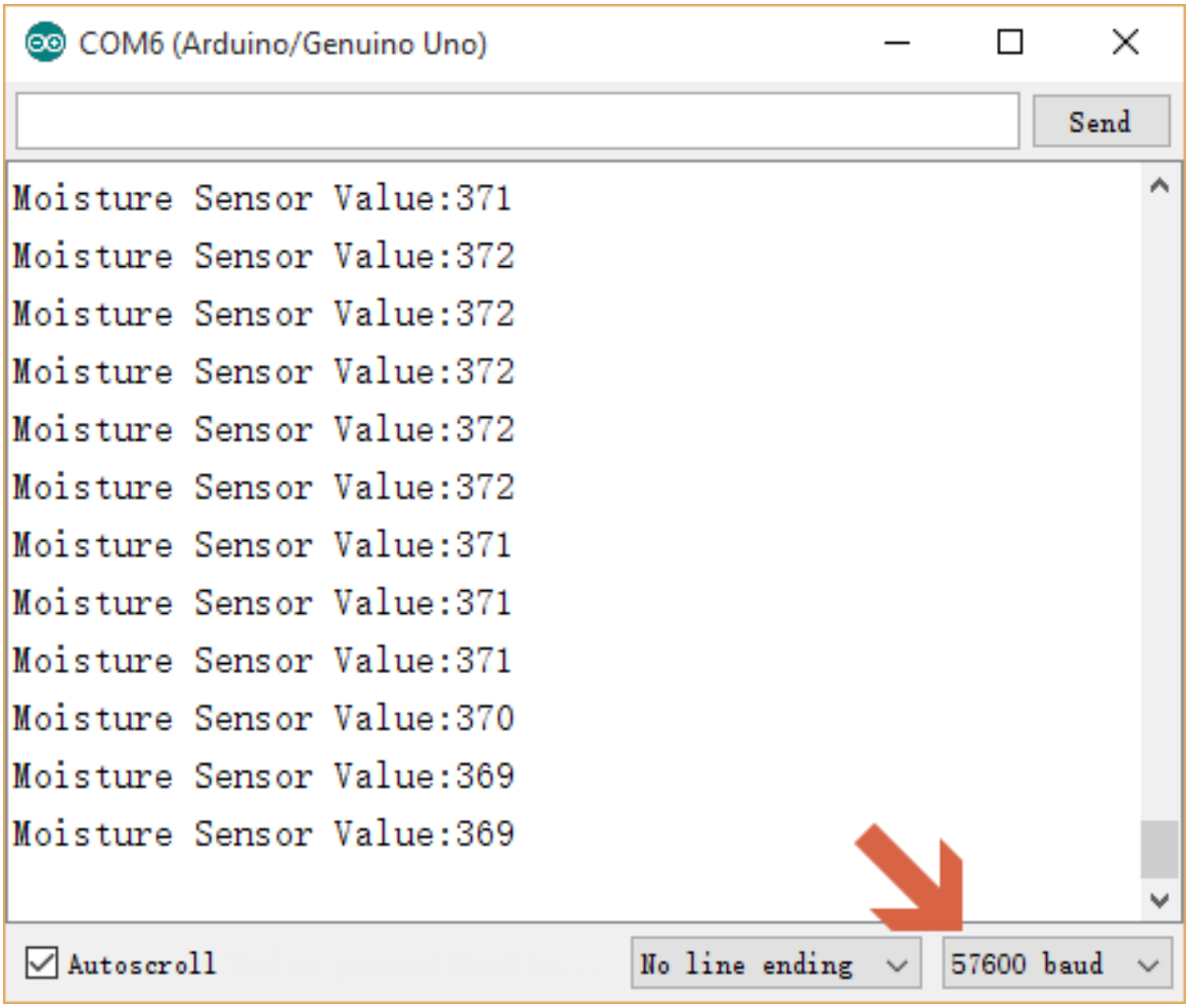

FAQ

Q&A	Some general Arduino Problems/FAQ/Tips
A	For any questions, advice or cool ideas to share, please visit the **DFRobot Forum** (https://www.dfrobot.com/forum/).

More Documents

- **Share**
  - Relative humidity to absolute humidity calculator (https://planetcalc.com/2167/)

Get **Analog Soil Moisture Sensor For Arduino** (https://www.dfrobot.com/product-599.html) from DFRobot Store or **DFRobot Distributor**. (https://www.dfrobot.com/distributor)

Turn to the Top