Sensors and Signal Analysis

Lecture Notes 2026

Nuno Azevedo Silva

Faculdade de Ciências da Universidade do Porto
INESC TEC

E-mail: nuno.a.silva@inesctec.pt

Contents

Introduction 1

1 Program 1

2 Evaluation 2

3 Course Materials 3

4 Recommended Bibliography 3

I The Perception Layer 4

1 What is a sensor? 4

2 Types of sensors 6

2.1 Active *vs* Passive 6

2.2 Analogue *vs* Digital 6

2.3 Direct *vs* Hybrid 7

2.4 External *vs* Internal 7

2.5 By operating physical principles 7

3 Characteristics of a sensor 7

3.1 Ranges and full-scales 9

3.2 Tranfer function characteristics 10

3.3 Operation characteristics 11

3.4 Dynamic Characteristics 12

II Signal Analysis 14

1 Analog Signals 15

1.1 Static Response 16

1.1.1 Central Tendency 16

1.1.2 Uncertainty 17
1.1.3 Signal-to-noise Ratio 18
1.1.4 Analyzing the Transfer function and Calibration Function 19
1.2 Time-Varying Signals 21
1.2.1 Time-domain Features 21
1.2.2 Frequency-domain Features 21
1.2.3 Time-frequency Features 23
1.2.4 Statistical and correlation Features 25
1.3 Signal Pre-Processing 25
1.3.1 Sampling Rate adjustment 26
1.3.2 Signal Filtering in the spectral domain 26
1.3.3 Smoothing in time domain 26
1.3.4 Windowing and Leakage 28

2 Digital Signals 28
2.1 Typical conversion schemes 29

3 From sensors to automation: a brief note on controllers 29

4 Machine Learning and Sensors 30

5 Concluding Remarks 32

IV Enabling Optical Sensing with Wave Interference 33

1 Wave Optics in a Nutshell 34
1.1 Maxwell's Equations and Wave Equation 35
1.2 Wave equation, Waves, and Wavefronts 36
1.3 Reflection and Refraction 40

2 Introduction to Optical Interferometry 42
2.1 Newton Rings 44
2.2 Young Double-Slit 45

3 Overview of Experimental Components 47
3.1 Sources 47
3.2 Optical components: Free space vs Fiber Optics 49

3.2.1 Beam steering 49
3.2.2 Beam division and combining 49
3.2.3 Polarization control 50
3.2.4 Lens and Lens systems 51
3.2.5 Pin-holes and slits 53
3.3 Optical Detectors 53
3.3.1 Detectors 54
3.3.2 Cameras 55

4 Concluding remarks 57

V Optical Interferometers 58

1 Transfer Matrix Formalism 58

2 Michelson Interferometer 59

3 Mach-Zehnder Interferometer 61
3.1 Digital Off-Axis Holography 62

4 Sagnac Interferometer 64

5 Fabry-Perot Interferometer 66

6 Concluding Remarks 69

VII Signal Detection in Interferometric Sensors 71

1 Homodyne detection 71
1.1 Active Homodyne 72

2 Heterodyne detection 74

3 Pseudo-Heterodyne detection 75

4 Concluding Remarks 76

VIII Beating The Limits of Noise 78

1 The Origin of Gravitational waves 78
1.1 How intense are these? 82

2 LIGO: The Classical Design 82
2.1 The Overall Design and Notes on Components 83
2.2 Michelson Interferometer and Dark fringe Operation 85
2.3 Fabry-Perot 86
2.4 Power Recycling 87

3 The Noise Limitations 88
3.1 The Quantum Noise Limit 90
3.2 Shot Noise Contribution 90
3.3 Radiation Pressure Noise 92
3.4 Reducing noise classically 92

4 Quantum Limit and Beyond 93
4.1 The origin of the noise 93
4.1.1 Quantization of the Electromagnetic Field 93
4.1.2 States and Operators to handle the quantized electromagnetic field 95
4.2 A Quantum Model for the Michelson Interferometer 98
4.2.1 Radiation Pressure 98
4.2.2 Shot Noise 99
4.3 Squeezed States and Reduction of noise 100
4.3.1 Surpassing the SQL using squeezing 102

5 Concluding Remarks 104

X Quantum Sensing with Nonclassical Light States 107

1 Generating Quantum States of Light and Single Photon Sources 108

2 Sensing with Entangled States: NOON states in Interferometers 109
2.1 NOON states 111
2.2 Enhanced Phase Sensitivity 112

3 Quantum Interference **114**
3.1 Hong-Ou-Mandel Effect 114
3.2 Second-Order Correlation Function 115
3.3 Monitoring the Hong-Ou-Mandel Shift for Quantum Sensing 116

4 Quantum for metrology and the Redefinition of SI Units **118**

Introduction

In this curricular unit, we aim to discuss the inner workings, characteristics, and types of Sensors and their signals, approaching them in a scientific manner. In particular, we will focus on **Optical Sensors** and specifically **interferometric sensors** to understand the potential of one of the most high-performance tools in physics these days and reflect on the challenges of the field, from classical to quantum regimes.

One of the major goals of the course is to provide a critical perspective on these topics introducing key concepts while engaging in interactive discussions and hands-on activities to see the concepts at work. By focusing on the concepts, the aim is to provide the necessary tools and solid cornerstones for a student who wishes to explore the topic of optical sensors in more detail. **The second goal**, and more general, is to provide the students close contact with techniques, materials, and skills closer to scientific research, acting as additional building blocks for their future career.

1 Program

A. Sensing and data analysis techniques and methods
Week 1-What is a sensor and how to characterize one.
Week 2 and 3-Handling output signals: static and time-varying; frequency analysis; brief introduction to data visualization and machine learning for science.

B. Classical Optical Interferometers for Measurement/Sensing
Week 4-Why Light Excels in Sensing and what is an Interferometer. Interference as the building block of interferometric sensing. Newton's Rings and Double Slit experimental demonstrations.
Week 5-Interferometers: matrix formalism and overview of Michelson, Mach-Zenhde, and Sagnac Interferometers. Hands-on with a Michelson Interferometer and Mach-Zehnder.
Week 6-Fabry-Perot interferometer and outlook and perspectives of classical interferometeric sensing. Discussion of the past, present, and future of interferometers.
Week 7- Homodyne, Heterodyne detection: Pros and cons of heterodyne

detection for phase recovery in optical interferometers and characterization of their performance. A case study with pseudo-heterodyne detection in the context of optical fiber sensors.

C. Semi-Classical Optical Interferometers for Measurement/Sensing
Week 8- LIGO Case study - tackling the challenge of ultra-sensitivity. The role of noise and quantum fluctuations. The standard quantum limit.
Week 9- LIGO Case study with quantum formalism - Squeezed light: concepts and generation. Noise reduction below the standard quantum limit.

D. Quantum Sensing with Optical Interferometry
Week 10-Quantum light sources and detectors. Optical interferometers with entangled states and non-classical light sources. Quantum Metrology.

E. Additional topics in Optical sensors
Week 11-Other optical sensors: back-scattering and distributed acoustic sensing. Optical sensors exploiting resonant phenomena: surface plasmon resonance and whispering gallery modes. Spectroscopy: techniques and tools.

Week 12-Project tutorials and exercises.

2 Evaluation

The evaluation method includes a final exam. The students can choose to be assessed only based on the final exam, in which case the exam grade is the final grade, or presenting an optional written report can be considered for 40% of the grade. In this case, the final grade is computed as:

$$Grade = 0.6 \times Exam + 0.4 \times Report$$

It is recommended that students choose the evaluation with a project component.

3 Course Materials

1. Lecture Notes
Compilation of key ideas and contextual help for the activities. These should be utilized by the students to better prepare each week.

2. Jupyter Notebooks
To be utilized during the class to provide a hands-on approach to the topics of signal processing and analysis.

4 Recommended Bibliography

In addition to the **Lecture Notes**, which compile most of the relevant information for the curricular unit, students may utilize the following bibliographic references:

1. Robert D. Guenther; Modern optics. ISBN: 0-471-51288-5
2. Fraden, Jacob, and J. G. King. Handbook of modern sensors: physics, designs, and applications. Vol. 3. New York: Springer, 2010.
3. Reitze, David; Saulson, Peter; Grote, Hartmut (Editors); Advanced Interferometric Gravitational-wave Detectors: Essentials of Gravitational Wave Detectors. ISBN: 978-9813146075
4. Bachor, Hans-A.; Ralph, Timothy C.; A Guide to Experiments in Quantum Optics. ISBN: 978-3-527-41193-1
5. Max Born; Principles of optics. ISBN: 0-08-018018-3

The Perception Layer

Week

I

1 What is a sensor?

Understanding what is a sensor is the trailhead of this curricular unit, and sets the tone for the discussion we want to engage in during it.

Section 1. What is a sensor?
Section 2. Types of sensors
Section 3. Characteristics of a sensor

What would you call a sensor?

In a broad perspective, one could argue that a sensor would be any abstract device that reacts to something that happens in the environment. Yet, with such a broad definition you would consider almost anything as a sensor. Going to the very fundamentals of physics, and focusing on the fundamental interactions (gravity, weak force, electromagnetic force, and strong nuclear force) a simple atom would be a sensor for any process in physics. This extreme example shows that the previously mentioned definition is overly broad, and as a result, it becomes meaningless. To better define what is a sensor, a better question we can ask ourselves is to start with why, i.e.

Why do you need sensors?

We need sensors because we want to know more about the environment so we can make decisions, build models, or construct machines that are aware of their surroundings. Therefore, being more strict, a sensor is a device that not only interacts with the environment but allows you to get information from it in order to make a **measurement**. Therefore:

Definition. Sensor: A sensor is a device that detects and measures physical properties or changes in a physical system, producing a usable output signal (typically an electric signal) in response to a *stimulus*. For example, a microphone is an acoustic sensor that measures pressure variations that reach the diaphragm associated with sound. Another example is a temperature sensor that measures the ambient temperature and outputs a signal related to that temperature.

In science and engineering, sensors are also closely related to the transduction principle, i.e., the conversion of one form of energy into another. Transducers and actuators are therefore important concepts to complete the backbone of any measurement and control system.

Sensor is a device that provides usable output in response to a specified quantity that is measured.

Instrument Society of America

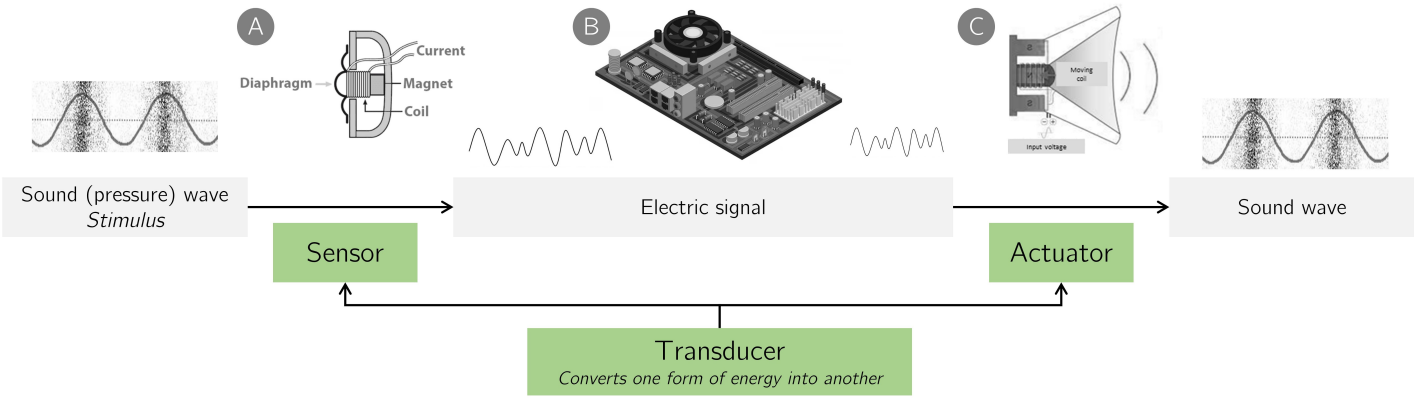

Figure 1. Sensors and actuators are both transducers. An illustrative and straightforward example is the sound components of our laptop. The sensor is the microphone, that converts sound (a signal transmitted as pressure waves) into electric signal. With this electric signal, some processing can be made to encode, decode, filter, amplify, storing, etc. The actuator in this case is the loudspeaker, which receives electrical signals and converts them into sound signals, with possibly altered properties.

Definition. Transducer: a device that converts one form of energy into another. For example, our microphone is a transducer that converts acoustic energy (sound waves) into an electrical signal. Yet, similarly, a loudspeaker can also be considered a transducer, but it is not a sensor.

Definition. Actuator: a device that produces a physical action or movement in response to a control signal. For example, an actuator may convert an electrical signal or other forms of energy into mechanical motion, as it happens in a loudspeaker. Another example is an electric motor in a robotic arm, that moves in response to signals from a control system.

All sensors are transducers, but not every transducer is a sensor.

At this point, our sensing machine has its backbone set but still incomplete. As we saw before, sensing is the process of getting information from the environment. Our definition of sensor utilizes two interesting concepts that we use every day in physics and engineering: **signal** and **measurement**. The signal definition is broad, but we can say that it refers to any quantity or process that conveys information, in the case of sensors, an electric signal. Measurement is the process of assigning a numerical value to a property or characteristic of an object or phenomenon (e.g. temperature, pressure, displacement). Ultimately, the sensor is only usable when we can translate a signal into a measurement.

Thus, measuring with a sensor has three steps:

1. the sensor is affected by the environment, outputting a response in the form of an electric signal;
2. the signal is transmitted to a processing unit;
3. the signal is processed and analyzed to convert raw information into the final measurement.

If we think about we will find this conceptual structure replicated everywhere, from man-made technology to nature's innerworkings. For example, human beings are equipped with 5 different types of sensors: eyes, which detect energy of the electromagnetic field[1]; ears that respond to acoustic pressure; a tongue and nose that are produce responses to the presence of given chemicals; and skin which can detect pressure and temperature. All the signals that come out of these sensory devices then travel through our body as electric signals using nervous pathways, reaching our nervous system where they are processed[2].

[1] mostly in the visible range, which is usually called light

[2] which may lead to a response by one of the many actuators in our body - such as a muscle.

2 Types of sensors

Grouping sensors into families is a challenge due to the vast diversity and specificity of sensors. Yet, such exercise offers significant learning opportunities while it also allows to establish common language across various fields of technology and science.

2.1 Active *vs* Passive

Active sensors require external power from an external source to operate. This signal is often referred to as an excitation signal. For example, a strain gauge is a sensor that explores the fact that a wire resistance changes when it is stretched or compressed. Thus, it is an active sensor as it requires passing a current in the sensing head to detect a resistance variation.

In contrast, passive sensors can output an electrical signal in response to the input stimulus without any additional power. The energy utilized is obtained directly from the measurand, as it happens for example in a thermocouple device, that makes use of the Seebeck effect.

2.2 Analogue *vs* Digital

An **analog sensor** generates an output signal that varies continuously within a specific range, typically producing a voltage that is directly proportional to the measured parameter. Parameters such as speed, temperature, pressure, and strain - inherently analog due to their continuous nature - align well with the capabilities of analog sensors. The output from these sensors changes in a smooth, continuous manner over time. However, the use of analog sensors

may feature slower response times and often requires an external power supply for amplification (e.g. Op amp circuit) of the output signals.

On its turn, a **digital sensor** emits output signals in discrete digital form, essentially toggling between two distinct states: ON/1 and OFF/0. An illustrative example of a digital sensor is a push-button switch. Depending upon the bit depth employed to represent the measured parameter, digital sensors may feature higher accuracy compared to their analog counterparts. Besides, they are also preferable for direct integration into microcontroller-based systems. Note yet that it is still possible to integrate analog sensor outputs in similar manners by utilizing analog-to-digital converters.

2.3 Direct *vs* Hybrid

A sensor that incorporates more than one transducer to output an electric signal[3] is called **hybrid**, in opposition to a **direct** sensor.

[3] Can you give an example of a complex sensor? *Hint: Chemical sensors.*

2.4 External *vs* Internal

A sensor may be incorporated into a larger system with other sensors, transducers, processing units, and actuators. Considering the position in this system, the sensor is classified as **external** if it responds to the environment outside the system, or **internal** if it aims to monitor and measure the properties of its internal parts.

2.5 By operating physical principles

If we want to design a sensor from scratch, our better shot would be to look at physical laws and processes to act as the design unit of our sensing system. This approach entails identifying the conversion phenomena[4] that can be derived from various physical phenomena involving interrelated variables to react to a stimulus. This diversity can also be utilized to group sensors as shown below in the table.

[4] not exclusive

Exercise 1. Consider the sensors in your smartphone: name some of them, their function, and their type (active/passive, analog/digital, direct/hybrid, extrinsic/intrinsic).

3 Characteristics of a sensor

When we are selecting a sensor, the above qualitative classification is often secondary. Indeed, the characteristics/specifications of the sensor and how they compare with those required for the application are the most important factors. These characteristics of the sensors may be divided into **static** and **dynamic** characteristics.