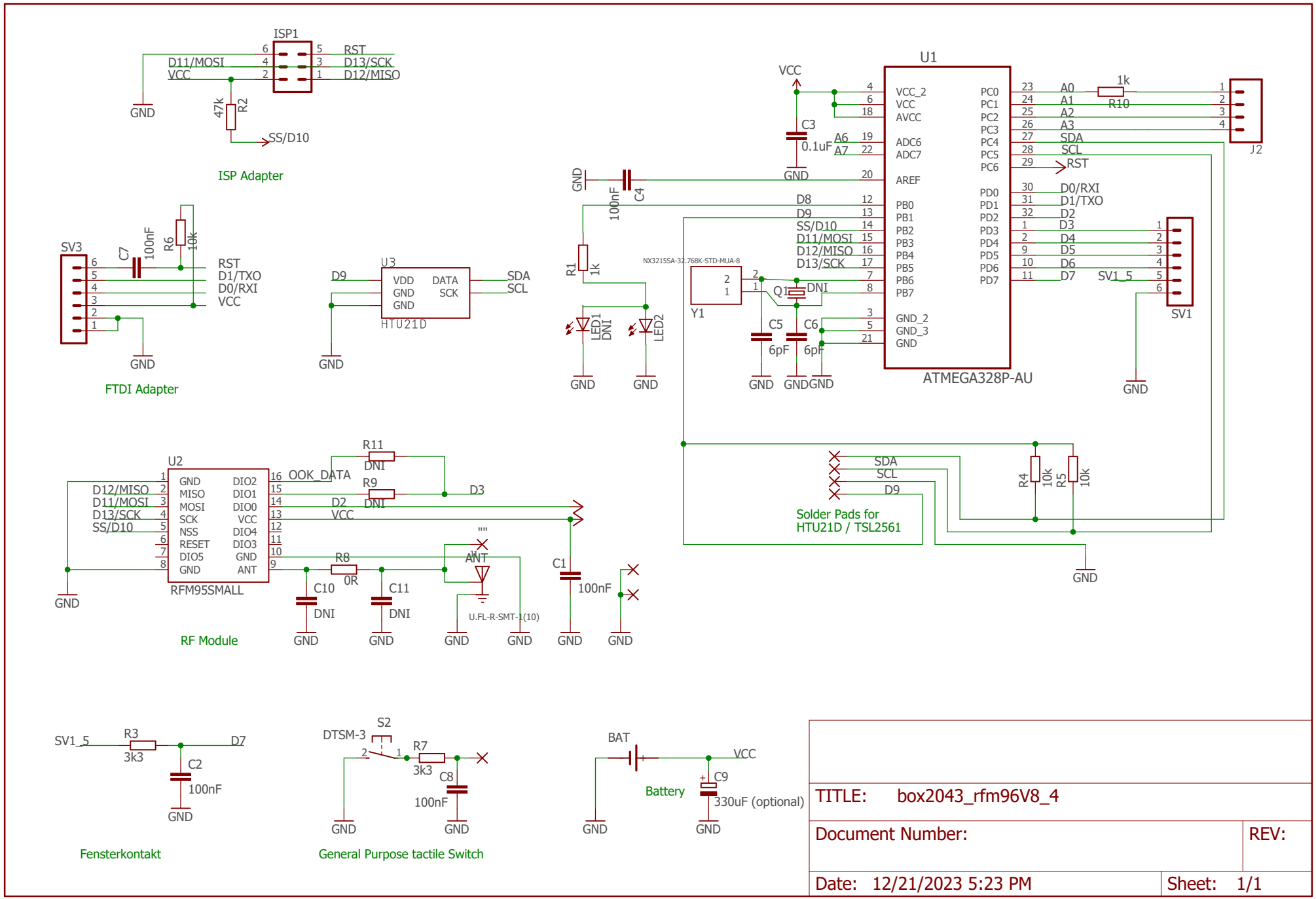
ISP1
D11/MOSI
VCC
RST
D13/SCK
D12/MISO
GND
47k
R2
SS/D10
ISP Adapter
SV3
C7
100nF
R6
10k
RST
D1/TXO
D0/RXI
VCC
GND
FTDI Adapter
U3
D9
VDD
GND
GND
DATA
SCK
SDA
SCL
HTU21D
GND
U1
VCC
VCC_2
VCC
AVCC
C3
0.1uF
A6
A7
ADC6
ADC7
GND
AREF
C4
100nF
D8
D9
SS/D10
D11/MOSI
D12/MISO
D13/SCK
PB0
PB1
PB2
PB3
PB4
PB5
PB6
PB7
R1
1k
LED1
DNI
LED2
NX3215SA-32.768K-STD-MUA-8
Y1
Q1
DNI
C5
6pF
C6
6pF
GND_2
GND_3
GND
ATMEGA328P-AU
PC0
PC1
PC2
PC3
PC4
PC5
PC6
PD0
PD1
PD2
PD3
PD4
PD5
PD6
PD7
A0
A1
A2
A3
SDA
SCL
RST
D0/RXI
D1/TXO
D2
D3
D4
D5
D6
D7
R10
1k
J2
SV1_5
SV1
SDA
SCL
D9
Solder Pads for
HTU21D / TSL2561
R4
10k
R5
10k
U2
GND
MISO
MOSI
SCK
NSS
RESET
DIO5
GND
DIO2
DIO1
DIO0
VCC
DIO4
DIO3
GND
ANT
D12/MISO
D11/MOSI
D13/SCK
SS/D10
RFM95SMALL
R11
DNI
OOK_DATA
R9
DNI
D3
D2
VCC
R8
0R
ANT
U.FL-R-SMT-1(10)
C10
DNI
C11
DNI
C1
100nF
RF Module
SV1_5
R3
3k3
D7
C2
100nF
Fensterkontakt
S2
DTSM-3
R7
3k3
C8
100nF
General Purpose tactile Switch
BAT
VCC
C9
330uF (optional)
Battery
TITLE: box2043_rfm96V8_4
Document Number:
REV:
Date: 12/21/2023 5:23 PM
Sheet: 1/1