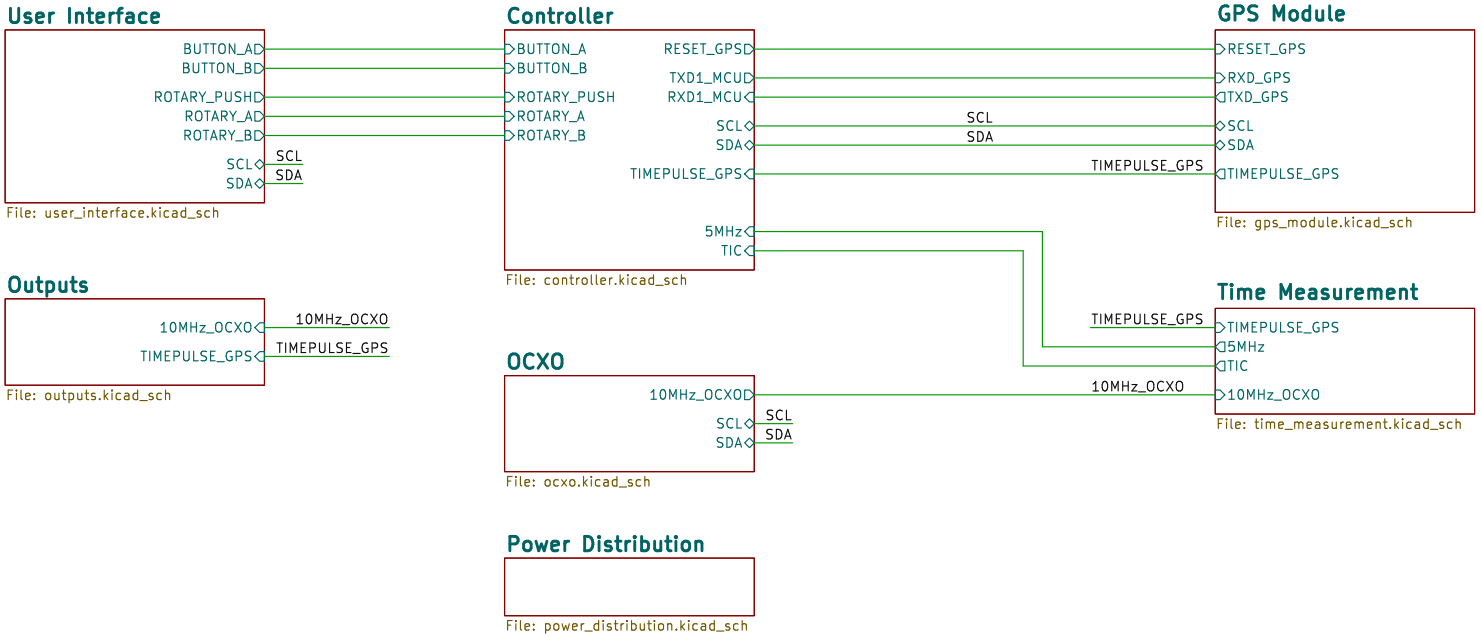

TBR Designs

Sheet: /
File: GPSDO-v1.0.kicad_sch

Title: GPSDO

Size: A4	Date: 2026-01-05	**Rev: v1.0**
KiCad E.D.A. 9.0.7		Id: 1/8

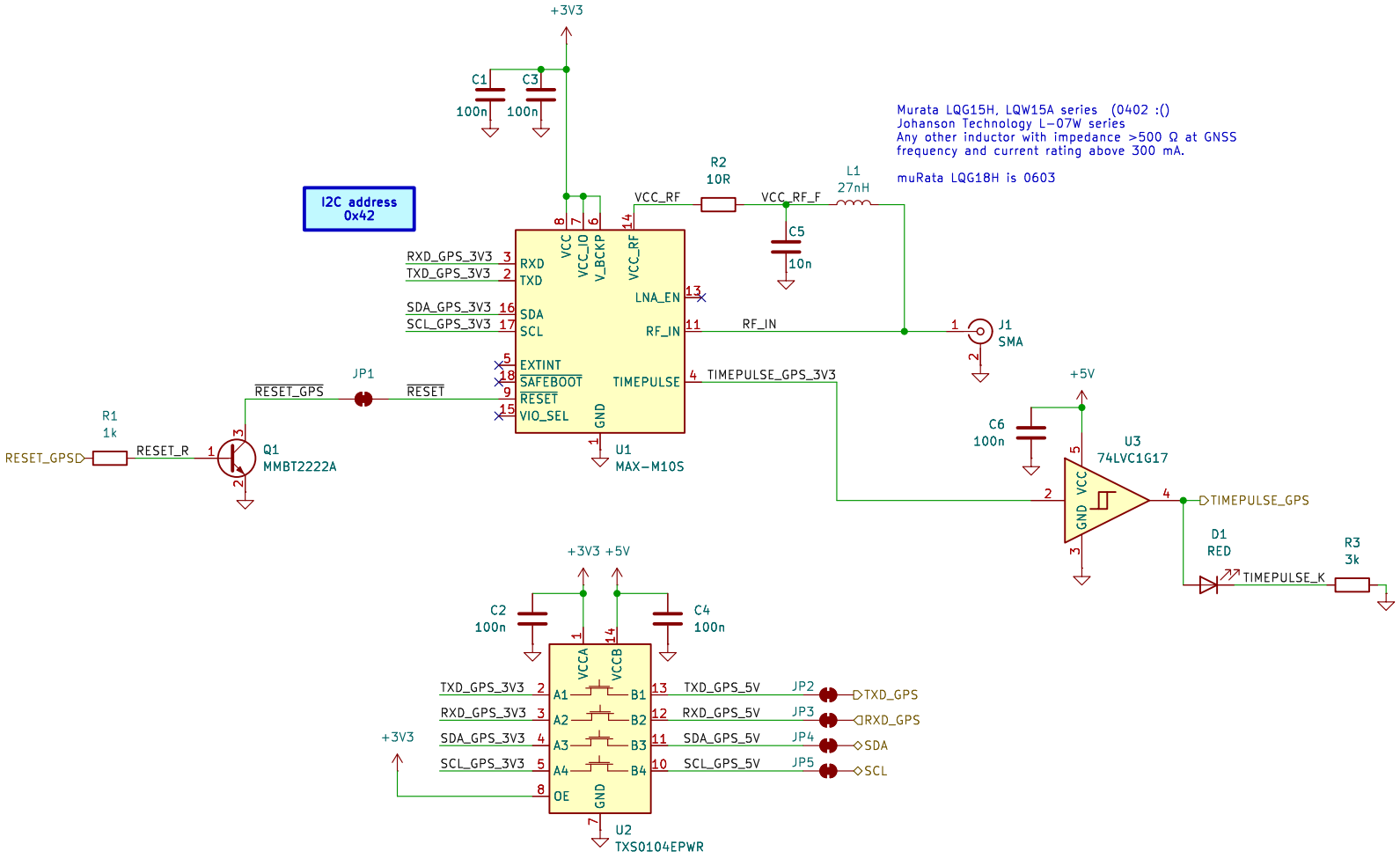

TBR Designs

Sheet: /GPS Module/

File: gps_module.kicad_sch

Title: GPSDO

Size: A4	Date: 2026-01-05	**Rev: v1.0**
KiCad E.D.A. 9.0.7		Id: 2/8

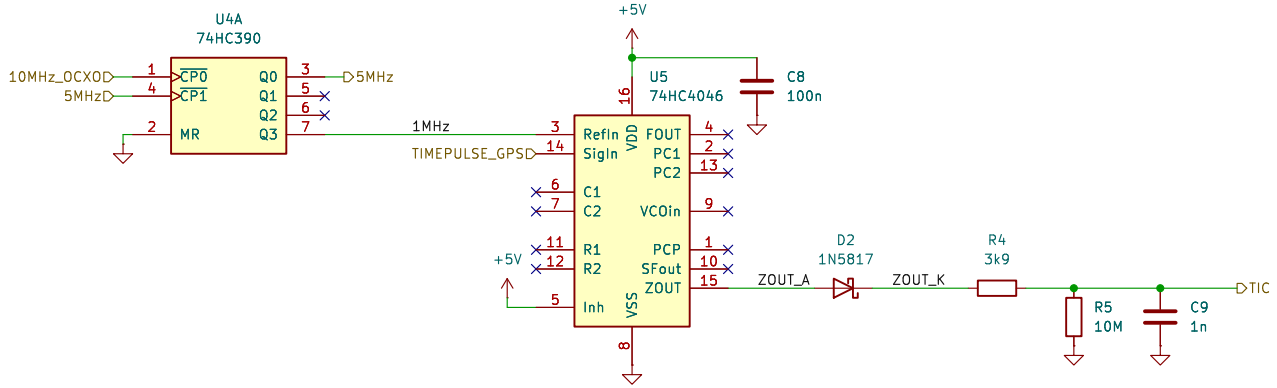

In a GPSDO (GPS Disciplined Oscillator), TIC stands for Time Interval Counter.
It is the "error signal" that tells the system exactly how much the local oscillator (the clock inside your device) has drifted away from the super-accurate time provided by the GPS satellites.
How it Works in Your Schematic
The circuit you've shared is a classic Phase-to-Voltage converter (often based on the popular "Lars DIY GPSDO" design). Here is how that TIC signal is created:
Comparison: The 74HC4046 (U5) acts as a phase detector. It compares the 1 MHz signal coming from your reference divider (U4A) with the 1 PPS (1 Pulse Per Second) "TIMEPULSE_GPS" signal from the GPS module.
Pulse Generation: Every second, a pulse is generated at the ZOUT pin. The width (duration) of this pulse represents the tiny time difference between the local clock and the GPS clock.
Integration: This pulse passes through the diode (D2) and charges the capacitor (C9). The combination of R4, R5, and C9 acts as an integrator, converting that "time pulse" into a steady DC voltage.
Measurement: The resulting TIC voltage is then read by a microcontroller's Analog-to-Digital Converter (ADC).
Why It Matters
Drift Detection: If the TIC voltage increases or decreases over time, it means your local oscillator is running slightly too fast or too slow.
Disciplining: The system uses this TIC value to "discipline" (adjust) the oscillator. If the TIC says the clock is slow, the microcontroller will nudge the oscillator's control voltage to speed it up, keeping it perfectly synchronized with the GPS.

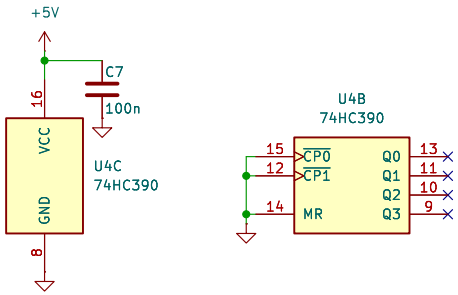

TBR Designs

Sheet: /Time Measurement/
File: time_measurement.kicad_sch

Title: GPSDO

Size: A4	Date: 2026-01-05	**Rev: v1.0**
KiCad E.D.A. 9.0.7		Id: 3/8

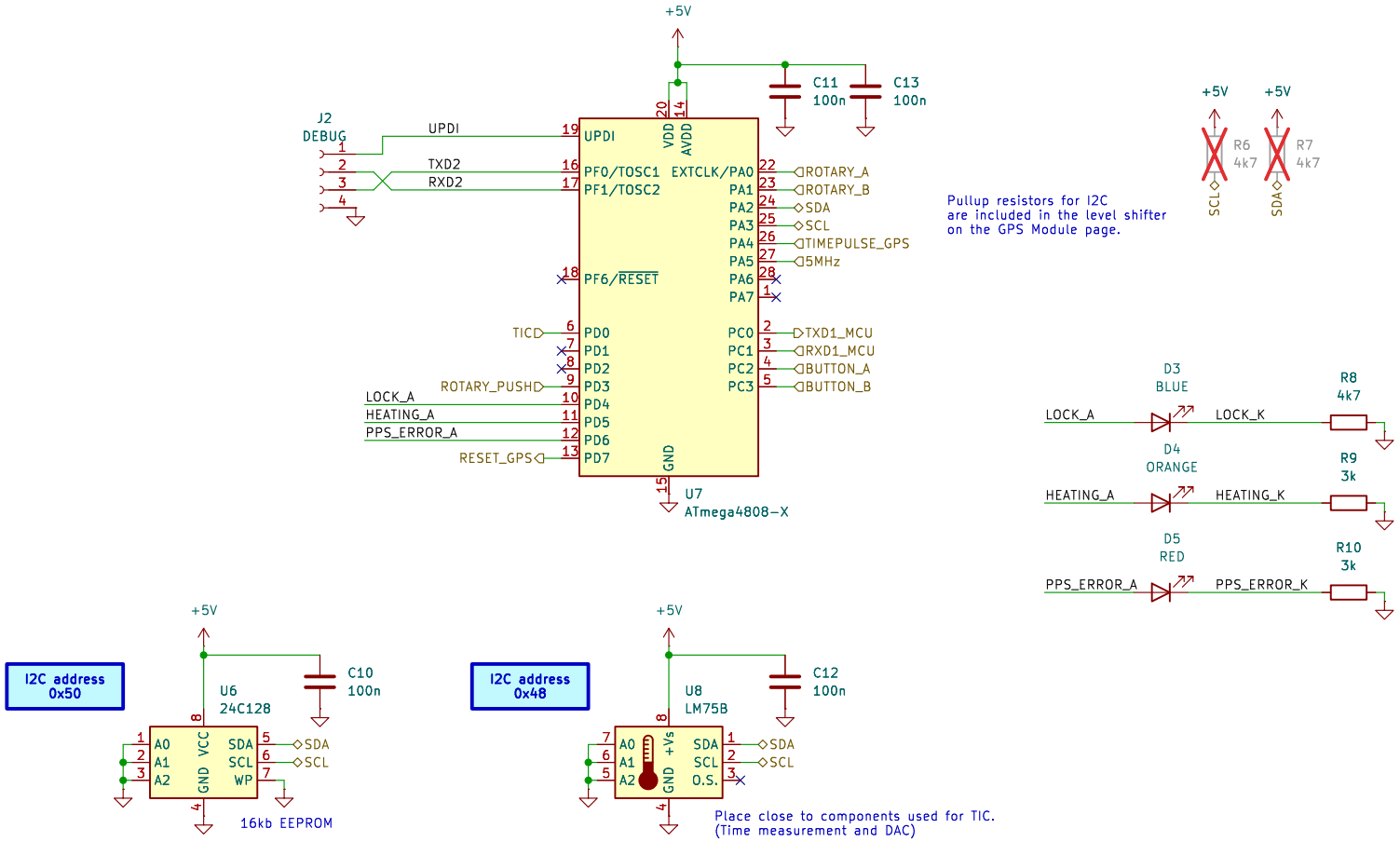

TBR Designs

Sheet: /Controller/

File: controller.kicad_sch

Title: GPSDO

Size: A4	Date: 2026-01-05	**Rev: v1.0**
KiCad E.D.A. 9.0.7		Id: 4/8

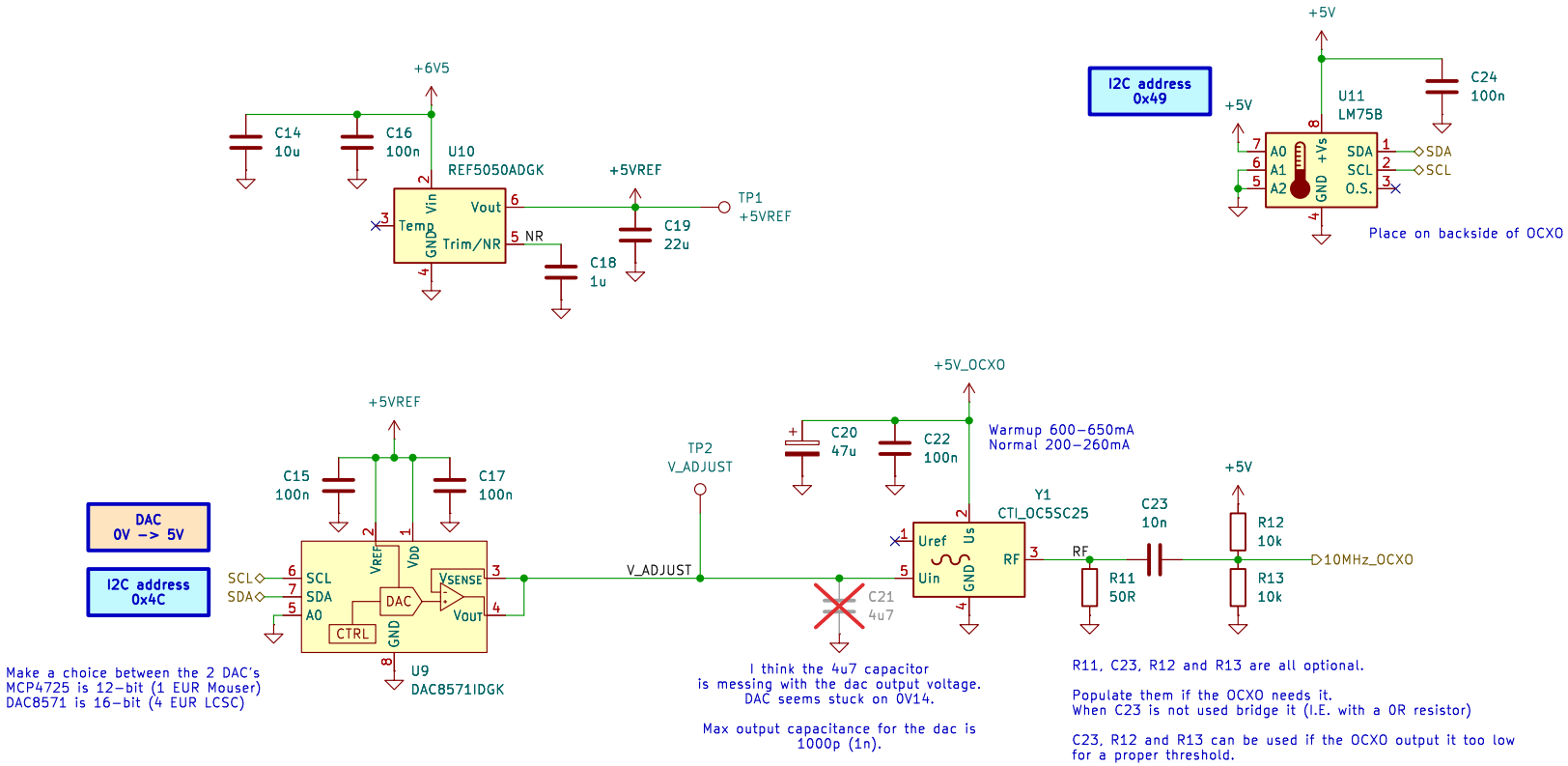

TBR Designs

Sheet: /OCXO/
File: ocxo.kicad_sch

Title: GPSDO

Size: A4	Date: 2026-01-05	**Rev: v1.0**
KiCad E.D.A. 9.0.7		Id: 5/8

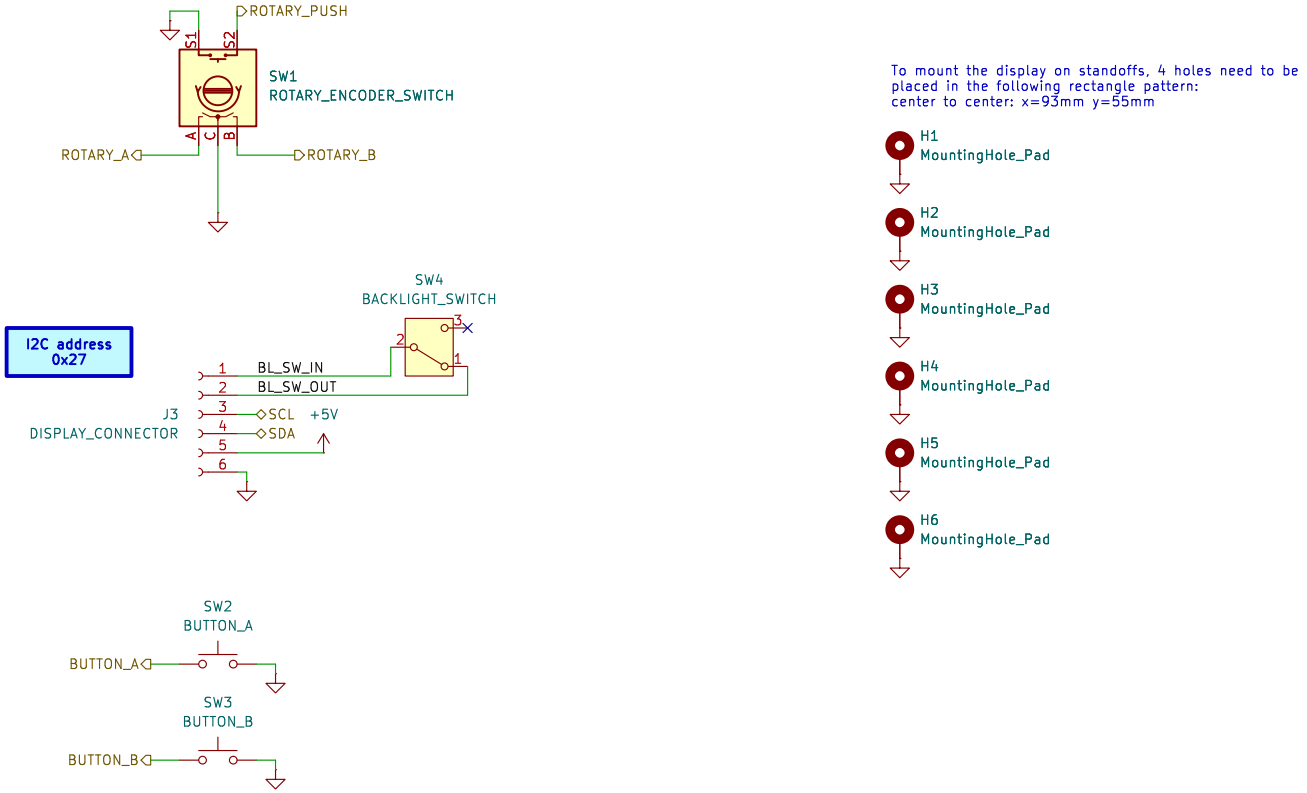

TBR Designs

Sheet: /User Interface/
File: user_interface.kicad_sch

Title: GPSDO

Size: A4	Date: 2026-01-05	**Rev: v1.0**
KiCad E.D.A. 9.0.7		Id: 6/8

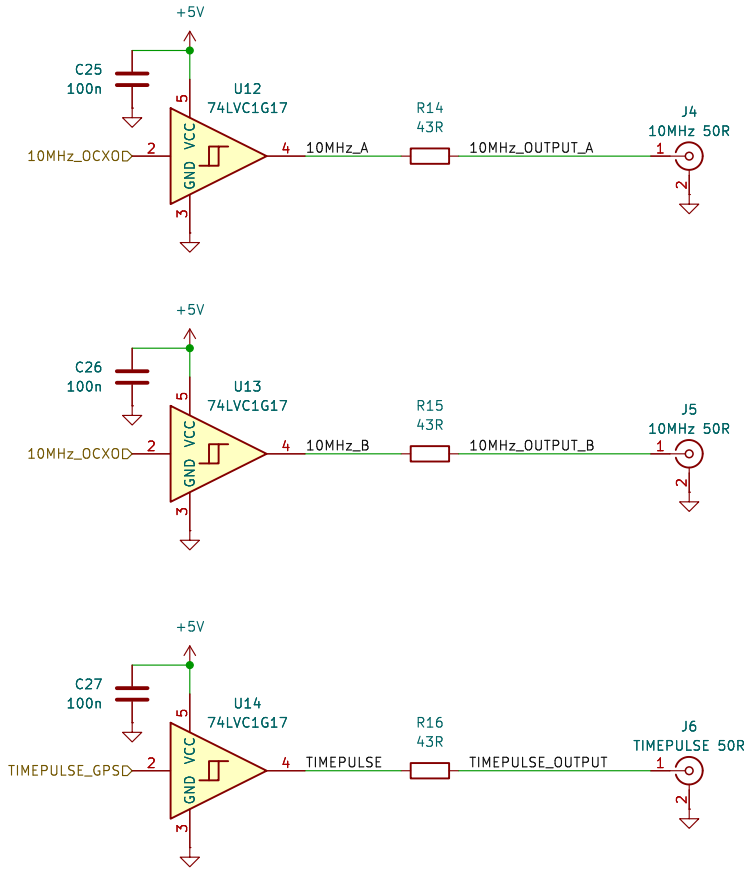

TBR Designs

Sheet: /Outputs/
File: outputs.kicad_sch

Title: GPSDO

Size: A4	Date: 2026-01-05	**Rev: v1.0**
KiCad E.D.A. 9.0.7		Id: 7/8

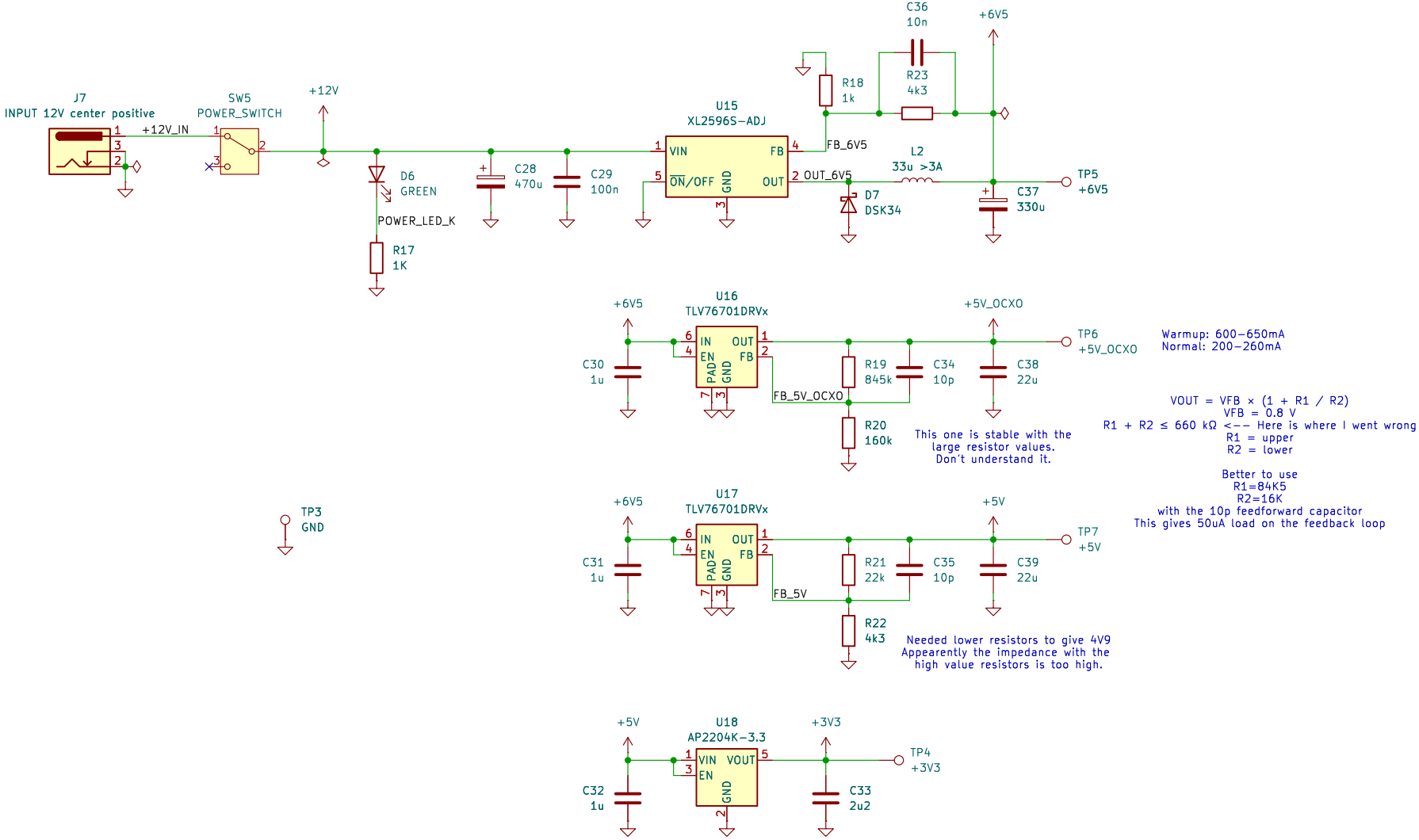

TBR Designs

Sheet: /Power Distribution/
File: power_distribution.kicad_sch

Title: GPSDO

Size: A4	Date: 2026-01-05	**Rev: v1.0**
KiCad E.D.A. 9.0.7		Id: 8/8