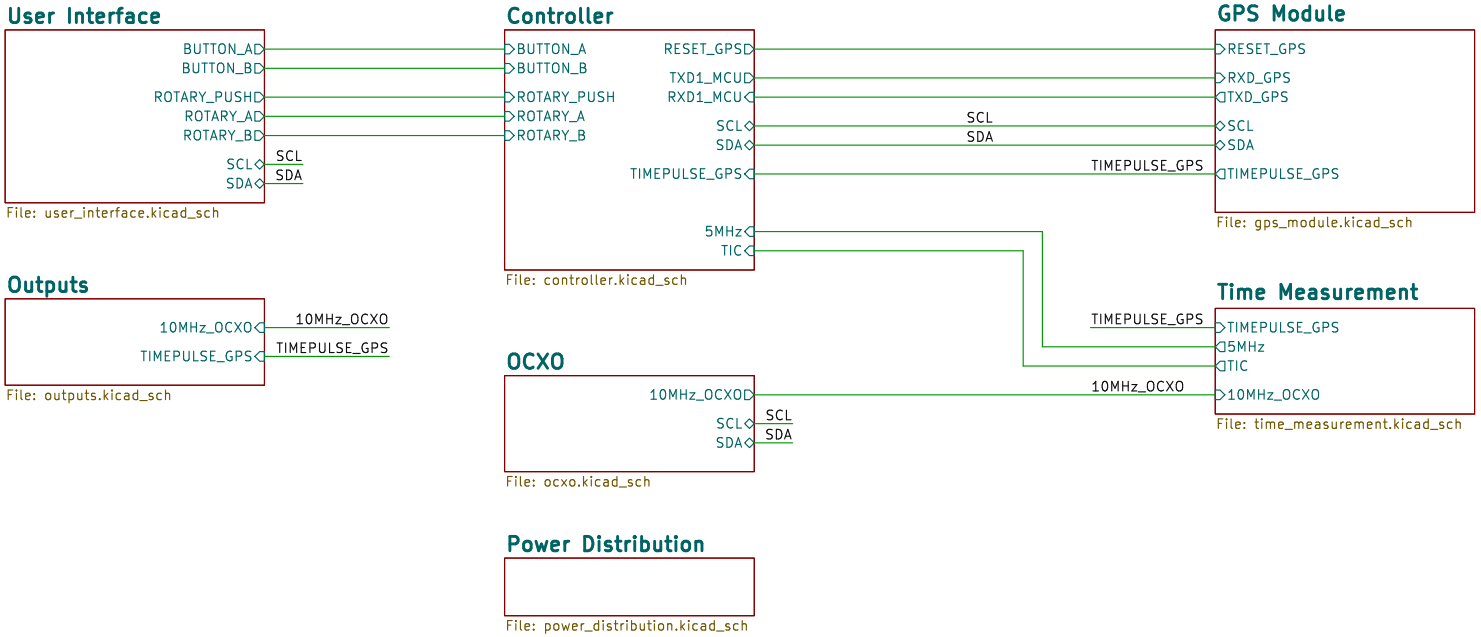

TBR Designs

Sheet: /
File: GPSDO-v1.0.kicad_sch

Title: GPSDO

Size: A4	Date: 2026-01-05	**Rev: v1.0**
KiCad E.D.A. 9.0.7		Id: 1/8

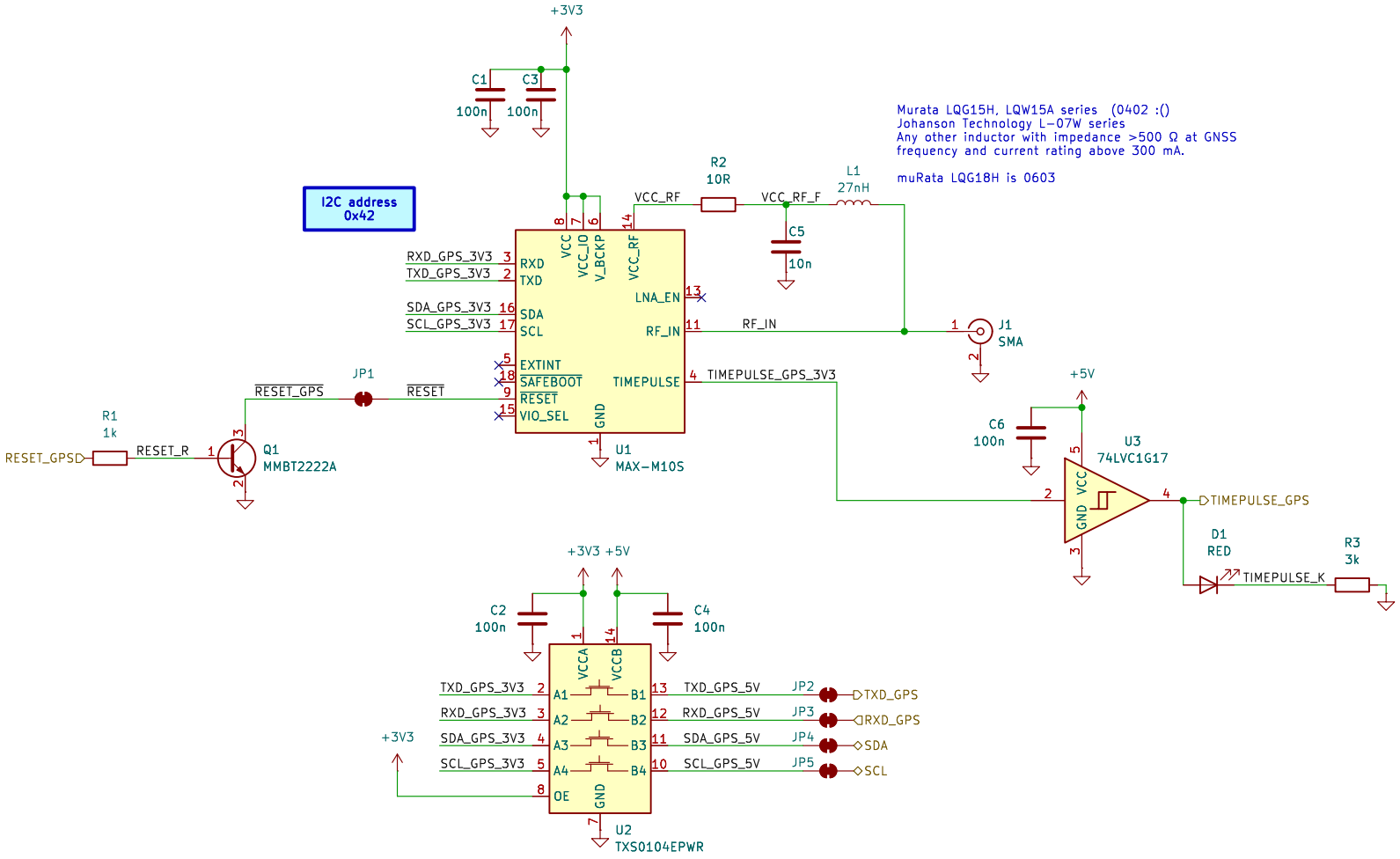

TBR Designs

Sheet: /GPS Module/

File: gps_module.kicad_sch

Title: GPSDO

Size: A4	Date: 2026-01-05	**Rev: v1.0**
KiCad E.D.A. 9.0.7		Id: 2/8

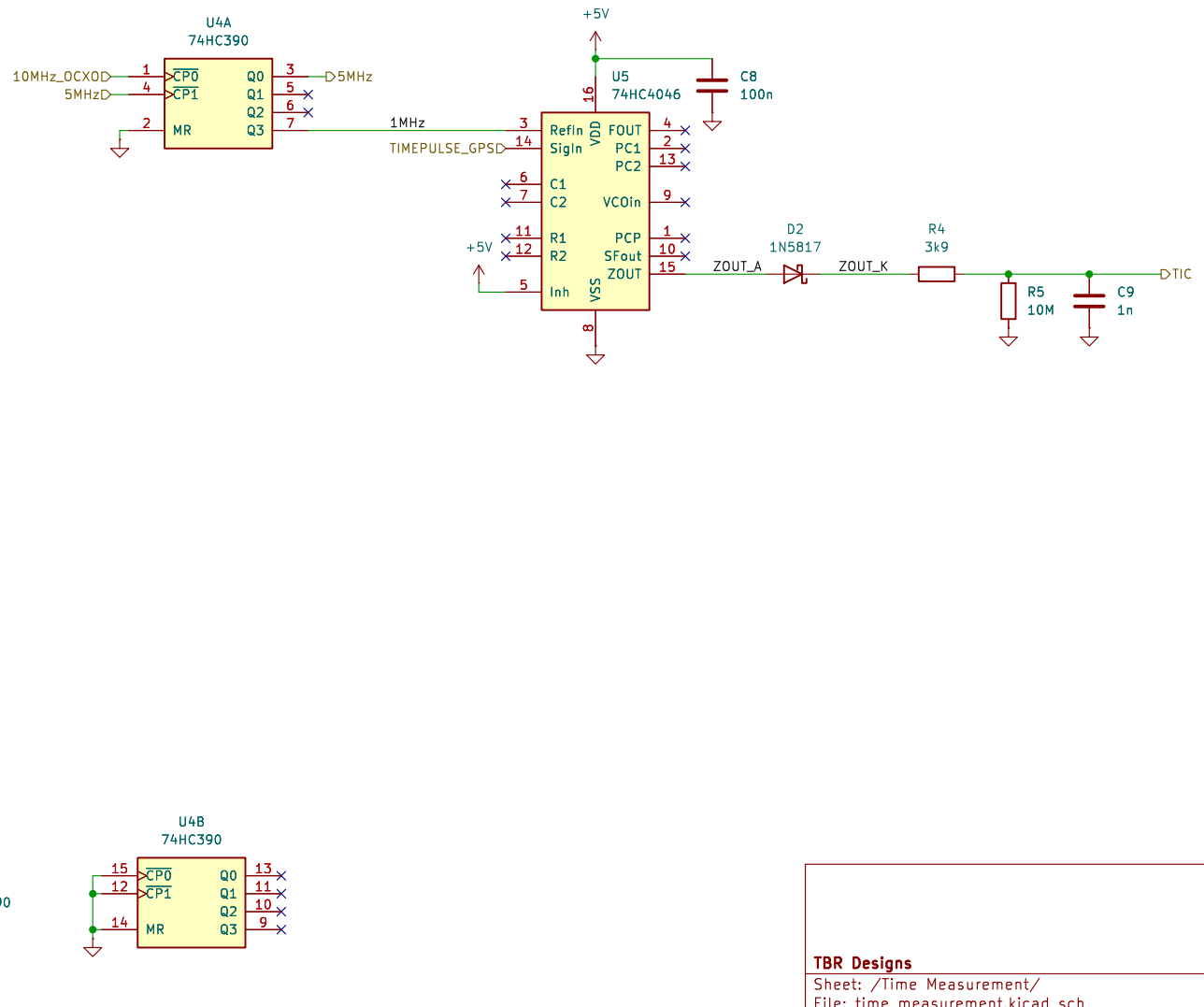

TBR Designs

Sheet: /Time Measurement/
File: time_measurement.kicad_sch

Title: GPSDO

Size: A4	Date: 2026-01-05	**Rev: v1.0**
KiCad E.D.A. 9.0.7		Id: 3/8

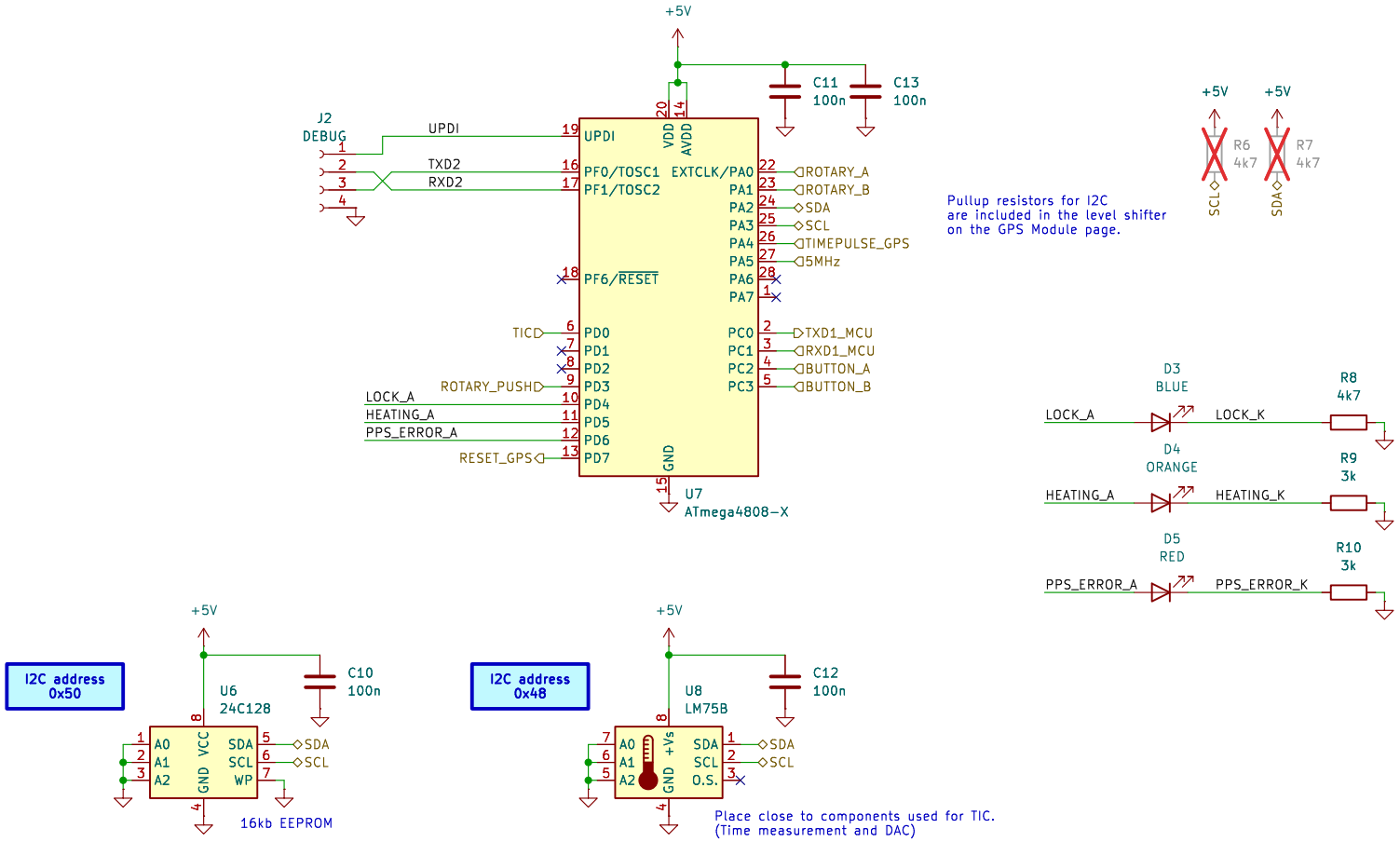

TBR Designs

Sheet: /Controller/

File: controller.kicad_sch

Title: GPSDO

Size: A4	Date: 2026-01-05	**Rev: v1.0**
KiCad E.D.A. 9.0.7		Id: 4/8

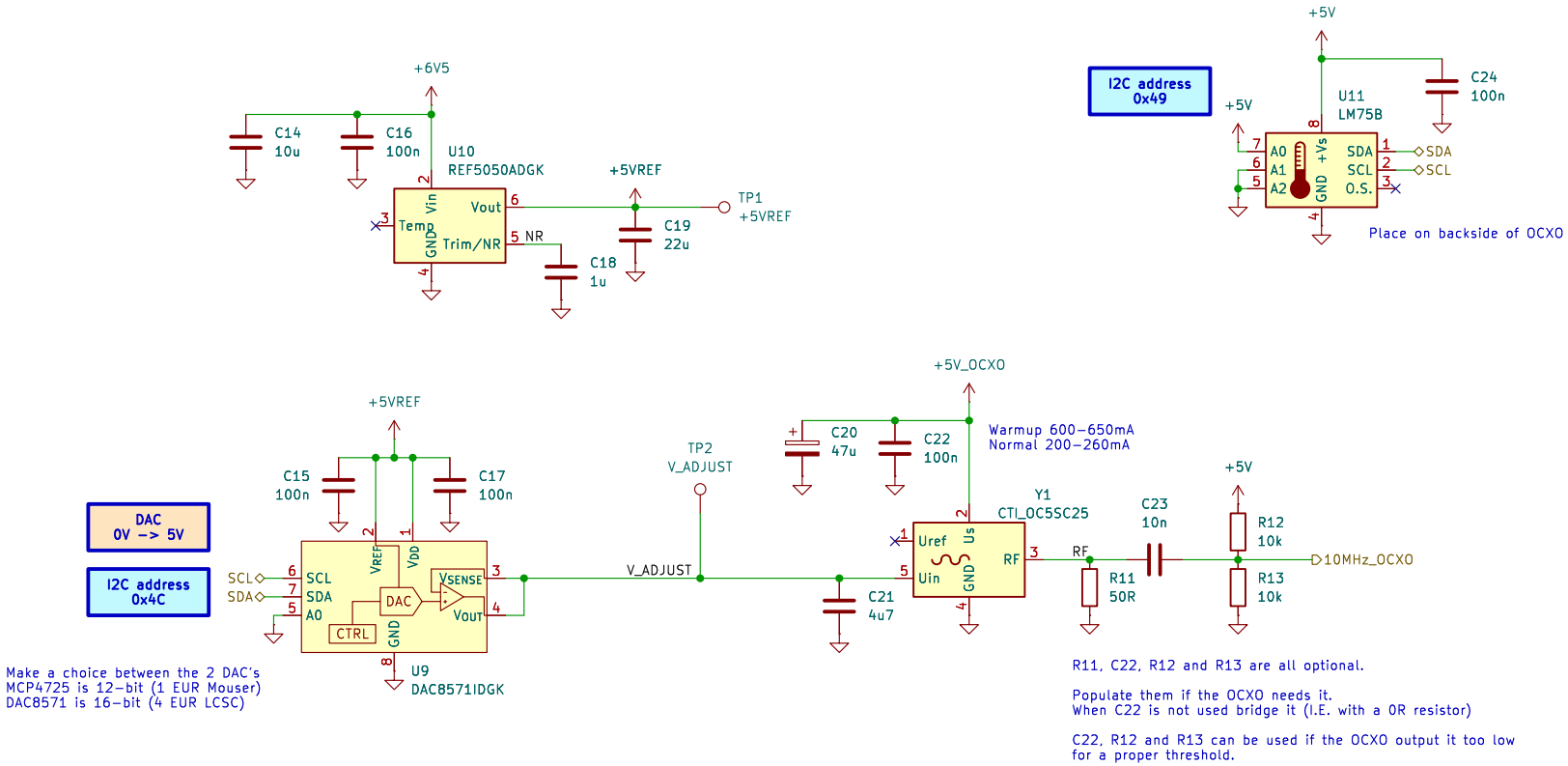

TBR Designs

Sheet: /OCXO/
File: ocxo.kicad_sch

Title: GPSDO

Size: A4	Date: 2026-01-05	**Rev: v1.0**
KiCad E.D.A. 9.0.7		Id: 5/8

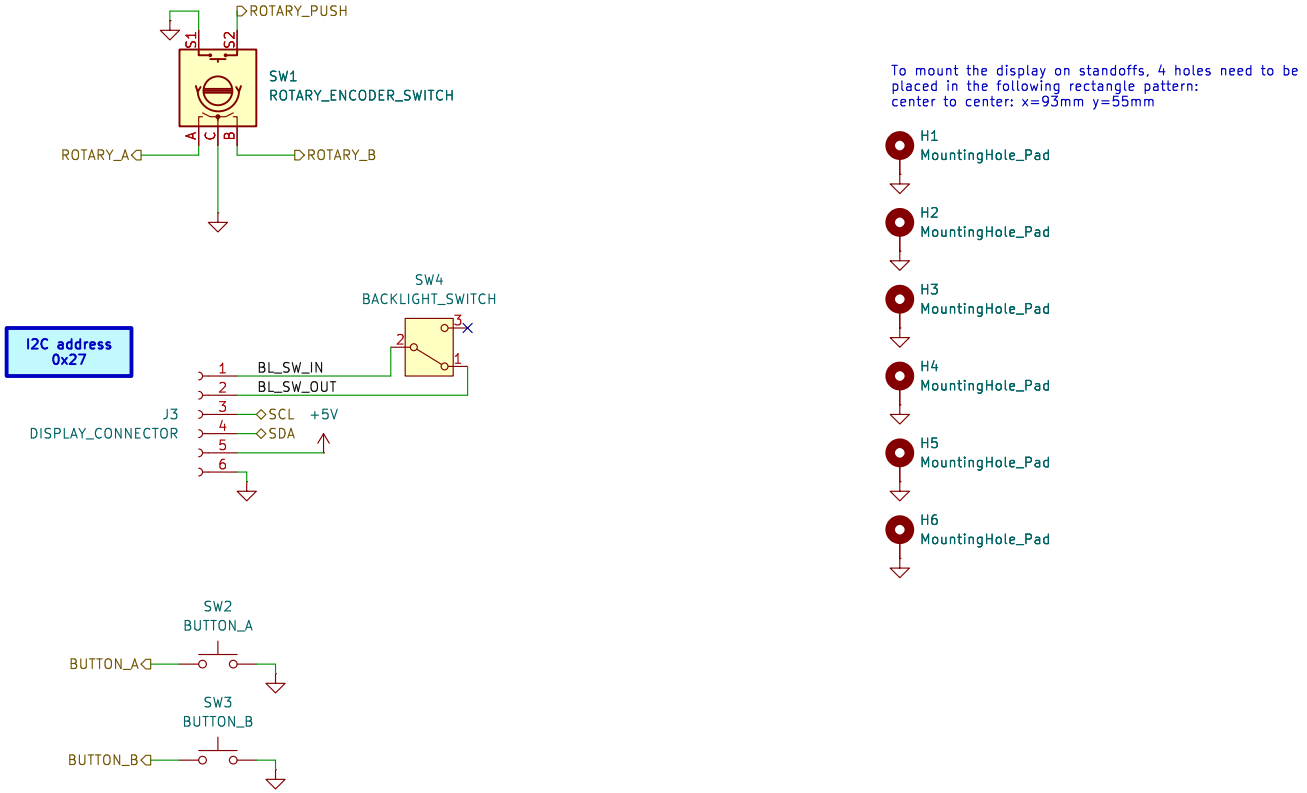

TBR Designs

Sheet: /User Interface/
File: user_interface.kicad_sch

Title: GPSDO

Size: A4	Date: 2026-01-05	**Rev: v1.0**
KiCad E.D.A. 9.0.7		Id: 6/8

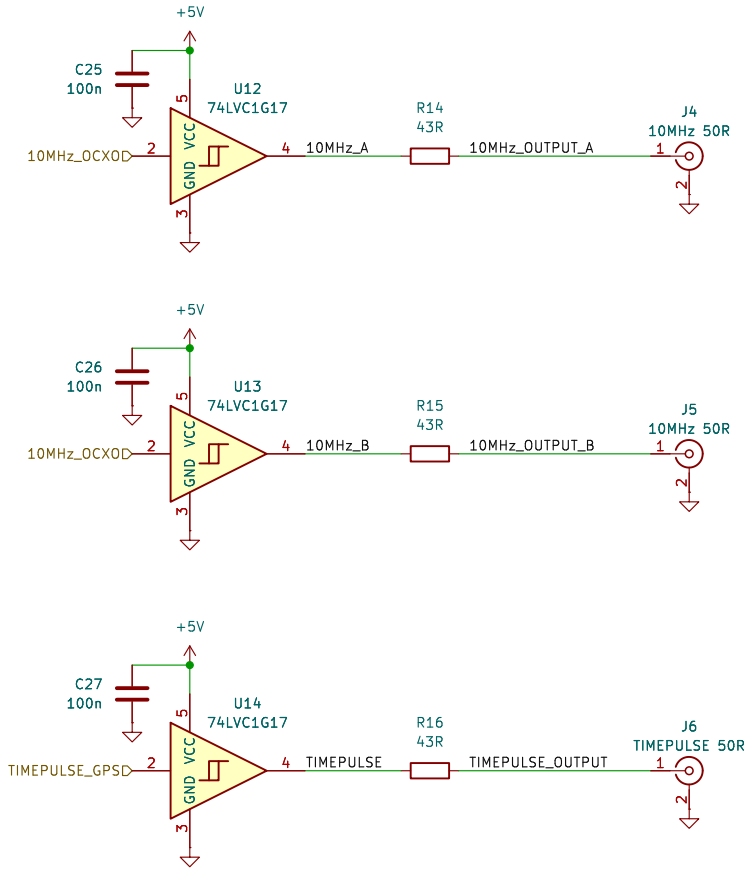

TBR Designs

Sheet: /Outputs/
File: outputs.kicad_sch

Title: GPSDO

Size: A4	Date: 2026-01-05	**Rev: v1.0**
KiCad E.D.A. 9.0.7		Id: 7/8

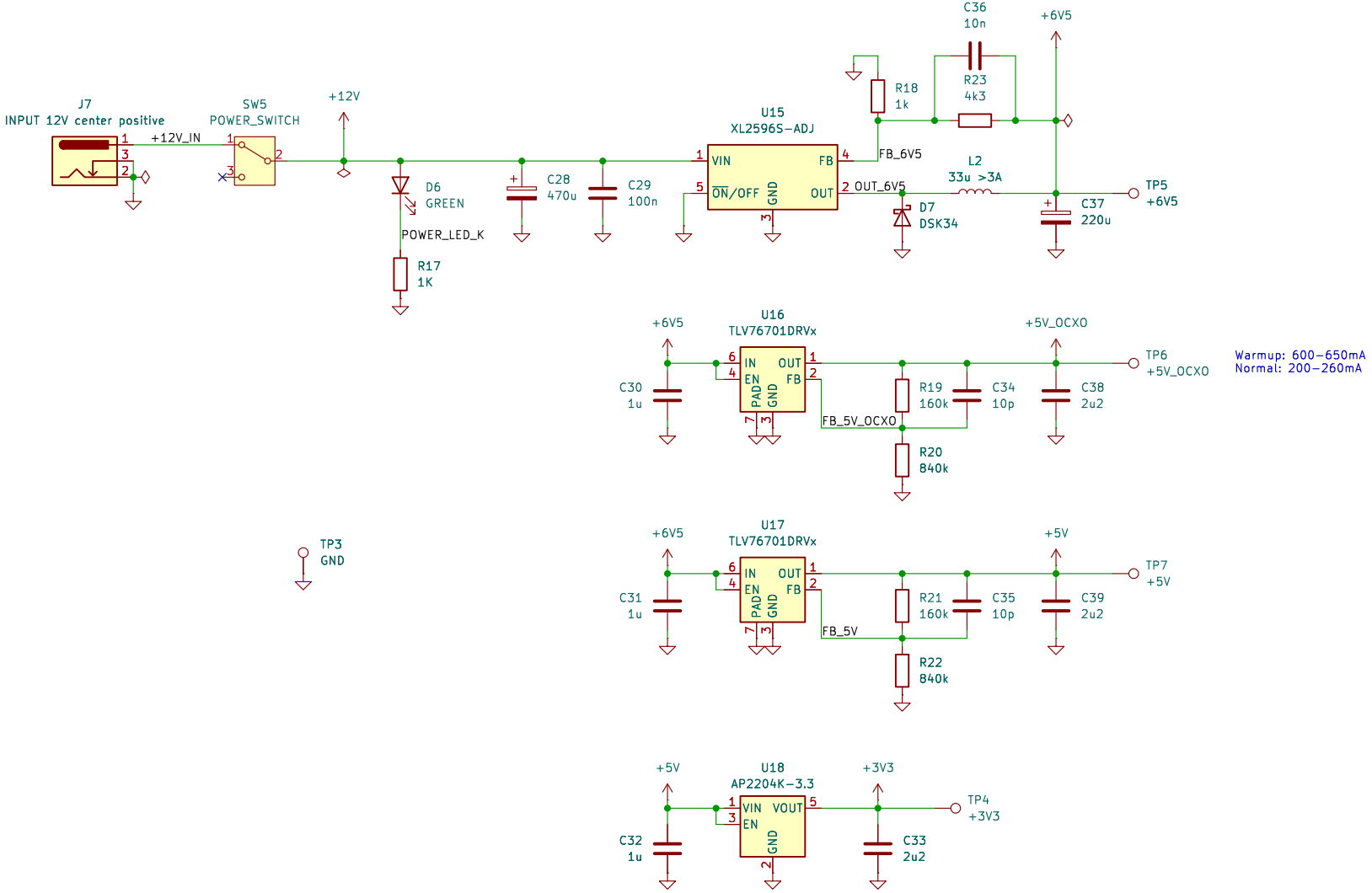

TBR Designs

Sheet: /Power Distribution/
File: power_distribution.kicad_sch

Title: GPSDO

Size: A4	Date: 2026-01-05	**Rev: v1.0**
KiCad E.D.A. 9.0.7		Id: 8/8