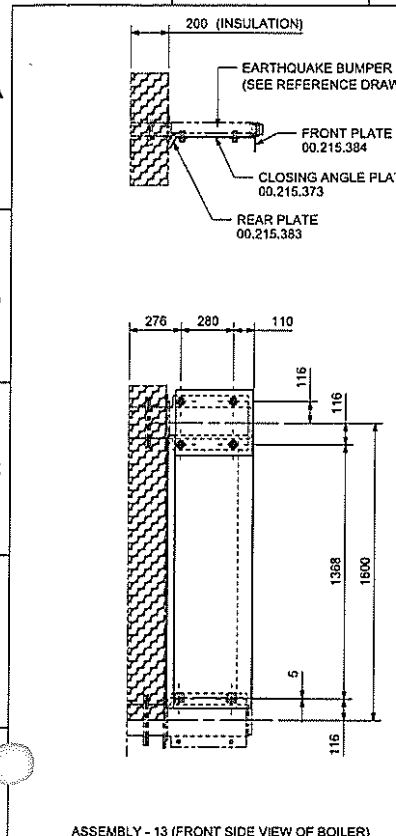

ASSEMBLY - 13 (FRONT SIDE VIEW OF BOILER)
& ASSEMBLY - 16 (REAR SIDE VIEW OF BOILER)
(MIRROR VIEW FOR ASSEMBLY - 14 & 15)
(SCALE: 1:20)

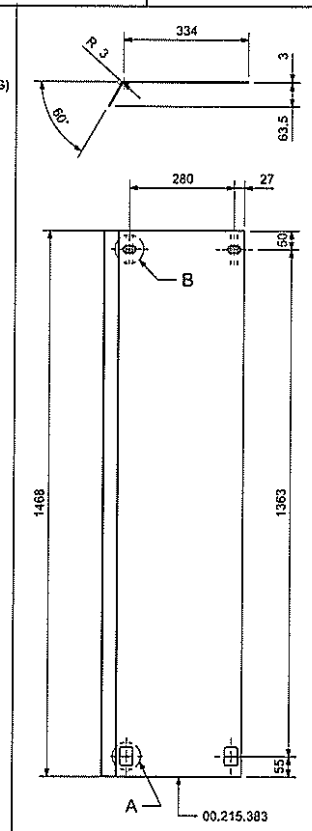

REAR PLATE
(MIRROR IMAGE FOR ASSEMBLY - 14 & 15)
(SCALE: 1:10)

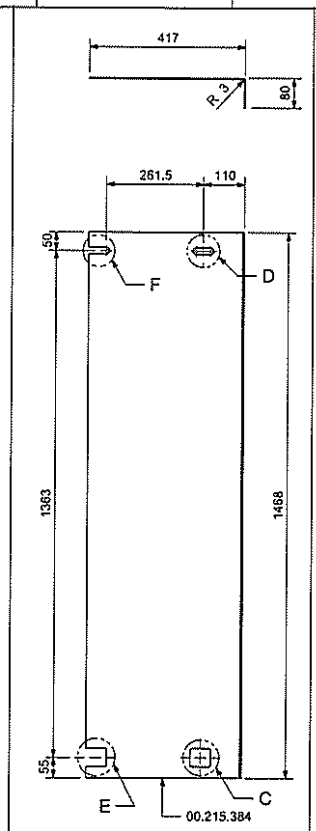

FRONT PLATE
(MIRROR IMAGE FOR ASSEMBLY - 14 & 15)
(SCALE: 1:10)

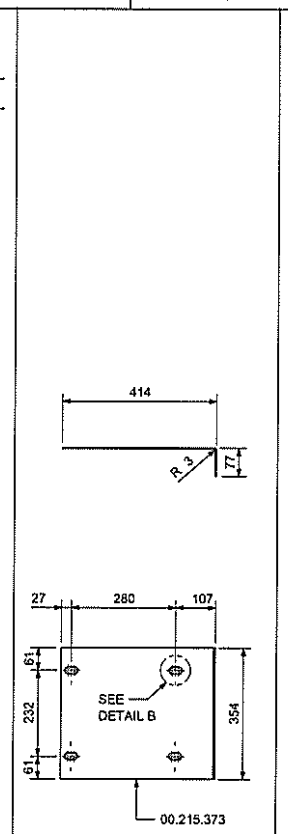

CLOSING ANGLE PLATE
(SCALE: 1:10)

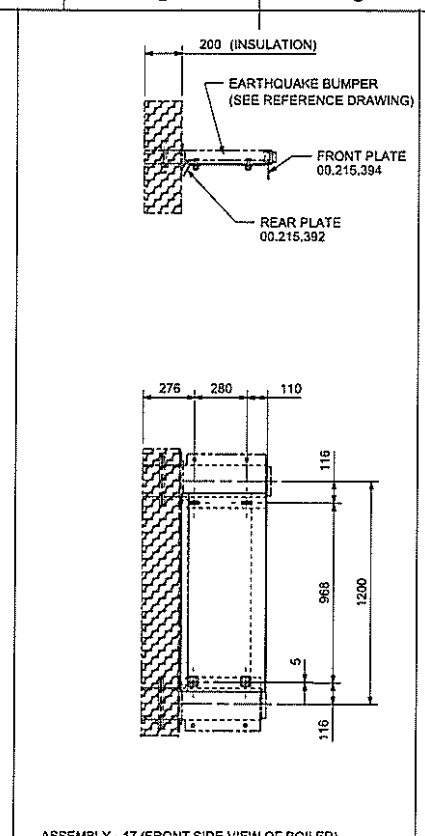

ASSEMBLY - 17 (FRONT SIDE VIEW OF BOILER)
& ASSEMBLY - 20 (REAR SIDE VIEW OF BOILER)
(MIRROR VIEW FOR ASSEMBLY - 18 & 19)
(SCALE: 1:20)

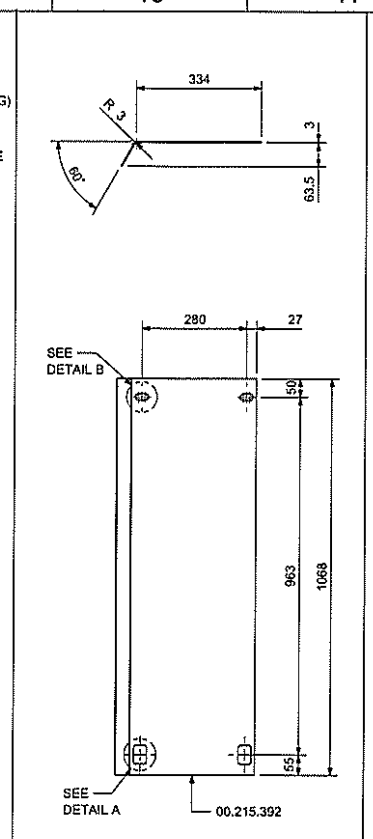

REAR PLATE
(MIRROR IMAGE FOR ASSEMBLY - 18 & 19)
(SCALE: 1:10)

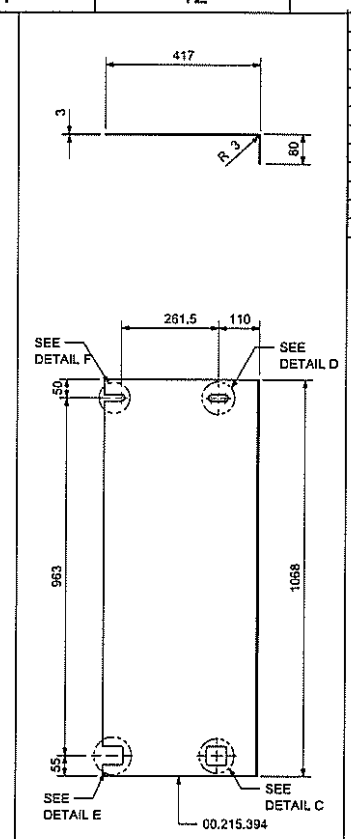

FRONT PLATE
(MIRROR IMAGE FOR ASSEMBLY - 18 & 19)
(SCALE: 1:10)

ITEM NO	QTY	Class	Description	Material	Cert.	Mass	WO Line/Useq
00.215.373	4	PLATE	354 x 489 x 3	A-240 Type 409		4.0	
00.215.383	4	PLATE	1468 x 412 x 3	A-240 Type 409		14.0	
00.215.384	4	PLATE	1468 x 495 x 3	A-240 Type 409		16.8	
00.215.389	4	PLATE	354 x 489 x 3	A-36		4.0	
00.215.392	4	PLATE	1068 x 412 x 3	A-240 Type 409		10.2	
00.215.394	4	PLATE	1068 x 495 x 3	A-240 Type 409		12.2	
00.215.397	4	PLATE	1168 x 412 x 3	A-36		11.2	
00.215.398	4	PLATE	1168 x 516 x 3	A-36		13.9	
00.215.401	4	PLATE	1068 x 412 x 3	A-36		10.2	
00.215.402	4	PLATE	1068 x 516 x 3	A-36		12.7	
00.217.899	4	PLATE	354 x 510 x 3	A-36		4.2	

NOTES:

1. QUANTITIES ON THIS DRAWING ARE FOR 1 BOILER.
   TOTAL 2x BOILERS REQUIRED. (BOILER UNIT 10 & 20)

2. FOR IDENTIFICATION, MARK EACH PARTS WITH ITEM NO.

Document for : 176/1
☑ Original ☐ Copy No. :
Received by : Glinee
Reviewed By : 22/11/17
Approved by :

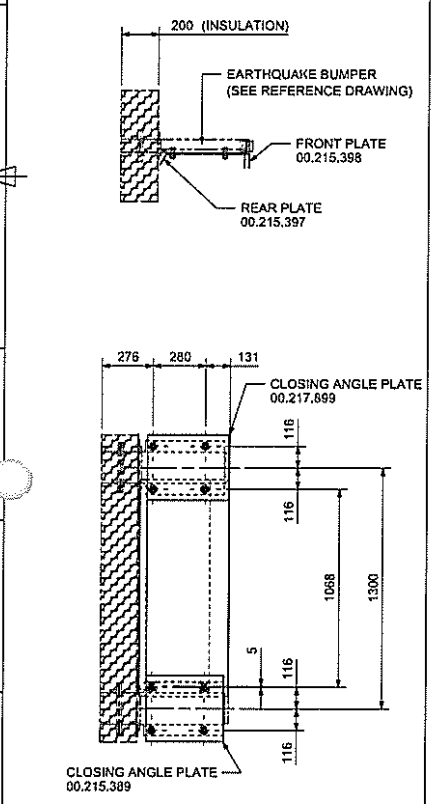

ASSEMBLY - 21 (FRONT SIDE VIEW OF BOILER)
& ASSEMBLY - 24 (REAR SIDE VIEW OF BOILER)
(MIRROR VIEW FOR ASSEMBLY - 22 & 23)
(SCALE: 1:20)

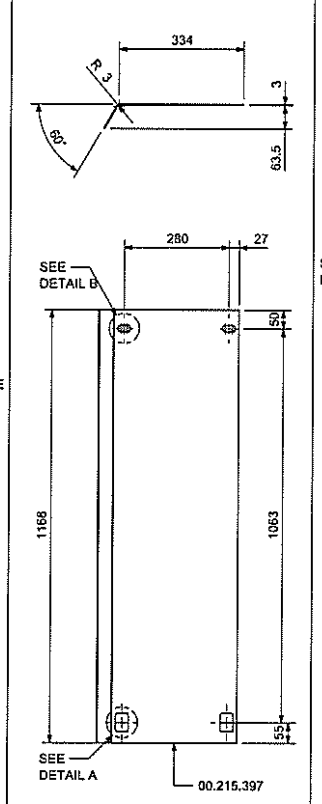

REAR PLATE
(MIRROR IMAGE FOR ASSEMBLY - 22 & 23)
(SCALE: 1:10)

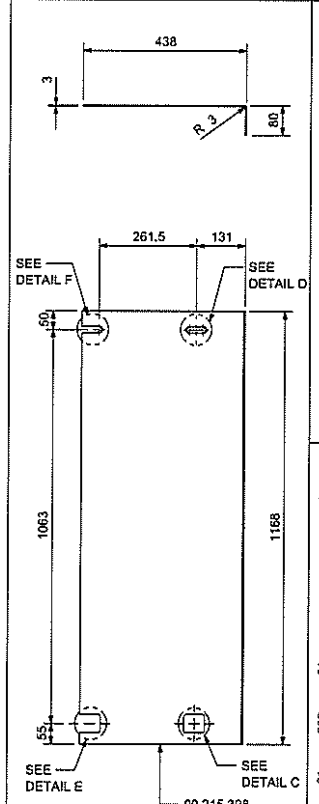

FRONT PLATE
(MIRROR IMAGE FOR ASSEMBLY - 22 & 23)
(SCALE: 1:10)

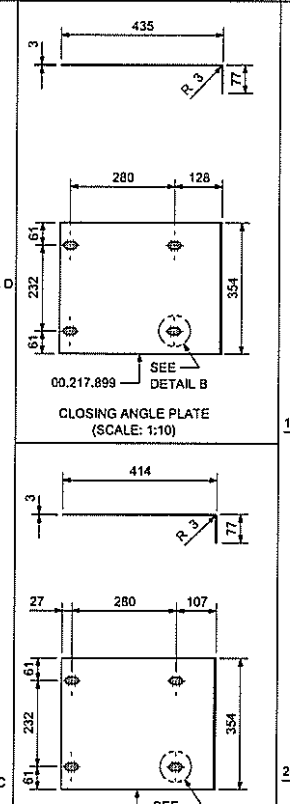

CLOSING ANGLE PLATE
(SCALE: 1:10)

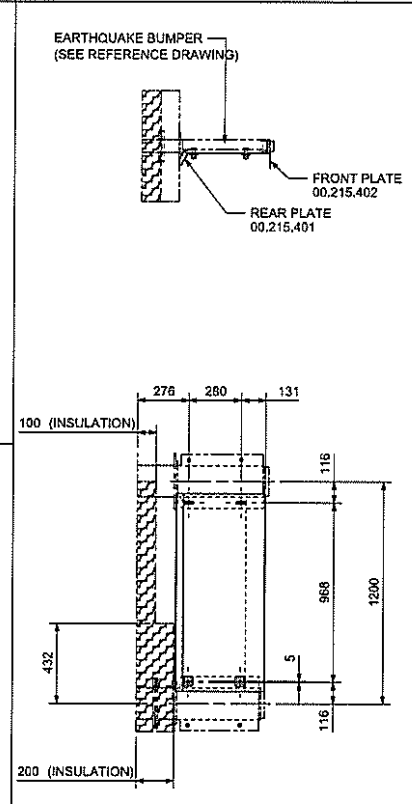

ASSEMBLY - 25 (FRONT SIDE VIEW OF BOILER)
& ASSEMBLY - 28 (REAR SIDE VIEW OF BOILER)
(MIRROR VIEW FOR ASSEMBLY - 26 & 27)
(SCALE: 1:20)

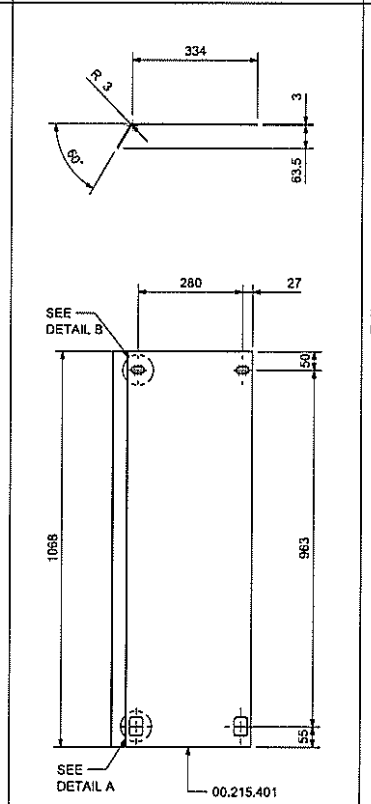

REAR PLATE
(MIRROR IMAGE FOR ASSEMBLY - 26 & 27)
(SCALE: 1:10)

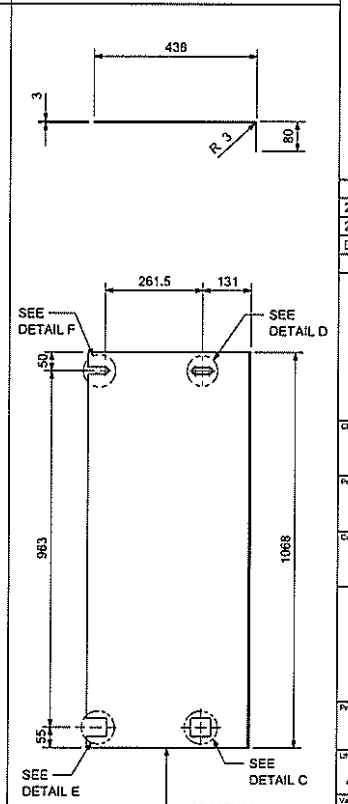

FRONT PLATE
(MIRROR IMAGE FOR ASSEMBLY - 26 & 27)
(SCALE: 1:10)

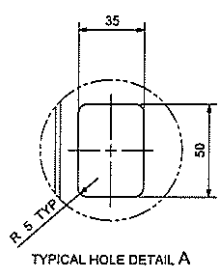

TYPICAL HOLE DETAIL A
SCALE 1:2

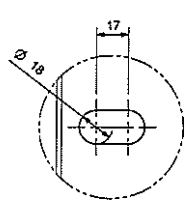

TYPICAL HOLE DETAIL B
SCALE 1:2

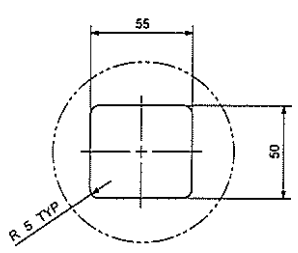

TYPICAL HOLE DETAIL C
SCALE 1:2

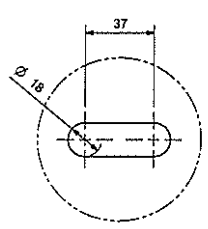

TYPICAL HOLE DETAIL D
SCALE 1:2

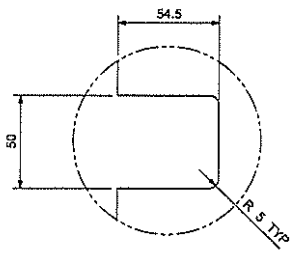

TYPICAL DETAIL E
SCALE 1:2

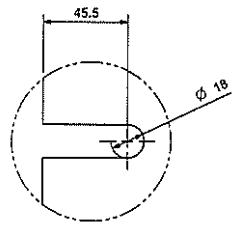

TYPICAL DETAIL F
SCALE 1:2

DRAWING NO.	DESCRIPTION
21057-271-30-001	EARTHQUAKE BUMPERS
21057-271-20-040	GENERAL ARRANGEMENT SIDE WALL SEALING PLATES

REFERENCE DRAWINGS

WELD SYMBOLS ACC. TO "AWS A2.4"

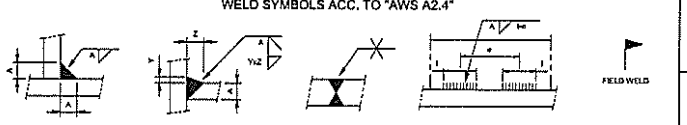

Client: ELECTRICITY GENERATING AUTHORITY OF THAILAND

Project: SOUTH BANGKOK POWER PLANT REPLACEMENT PROJECT PHASE 1

Contractor: THE CONSORTIUM OF SIEMENS AKTIENGESELLSCHAFT, SIEMENS LIMITED AND MARUBENI CORPORATION

NEM Our Energy, Your Power

NEM Doc. no.: 21057-271-20-042
NEM PDM ID: 00.028.784
PROJECTION:
ECCN: N
AL: N
Document Status:

Project: SOUTH BANGKOK REPLACEMENT PROJECT
PC: TH1009
LNID: 449196173
DCC Type: MTB030
Contents code: 00UHA
Variant: -
Serial no.: -
Origin no.: -
Created with: -
Dept.: HTT

Rev.	Date	Drawn	Appr.	Details of revision
1	01-09-2017	RJOL	MARB	For Fabrication
0	21-07-2017	RJOL	MARB	First Issue

Width: - Format: A1 Scale: 1:20 Specs.: -

	Date	Name
Appr.	21-07-2017	MARB
Chkd KP	21-07-2017	HBEE
Chkd 1	21-07-2017	RJAN
Drawn	21-07-2017	RJOL

Handling: RESTRICTED

Title: SIDE WALL SEALING PLATES
ASSEMBLY – 13 U/I 28
DETAILS

SIEMENS

CLIENT NO.: -

Rev.: 1
Sheet no.: 1/1

Copyright © 2016, Siemens. All rights Reserved. Goods labelled with "AL not equal to N" are subject to European or German export authorization when being exported out of the EU. Goods labelled with "ECCN not equal to N" are subject to US reexport authorization. Even without a label, or with label "AL N" or "ECCN N", authorization may be required due to the final whereabouts and purpose for which the goods are to be used.

NEM Energy BV, Stadhouderslaan 900, 2382BL, Leiderdorp, The Netherlands