SCALING RULES: 1:100 1:75 1:50 1:25 1:20

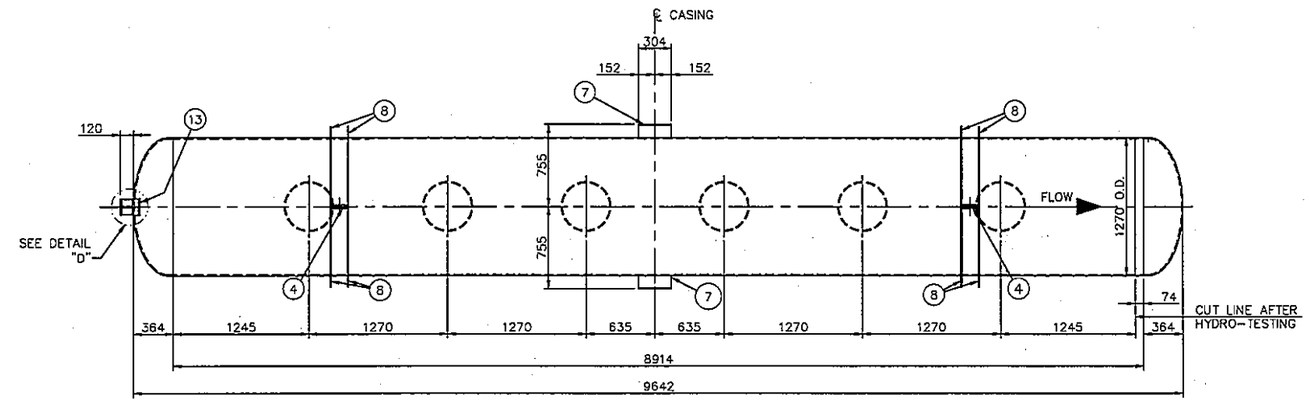

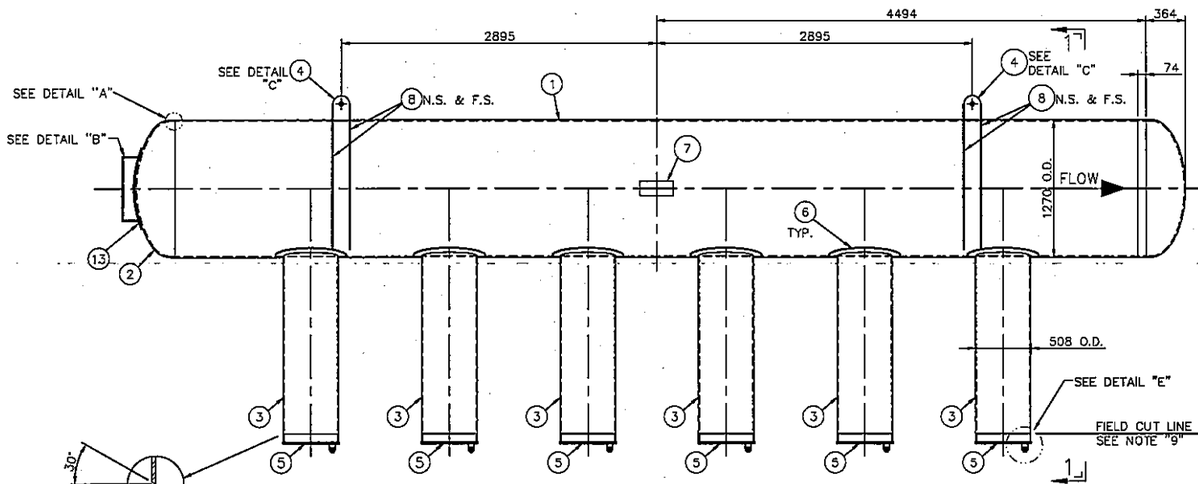

TOP GAS FUEL OUTLET HEADER – MK. 3863-T6-118TGFO 1 – 2 REQ'D.

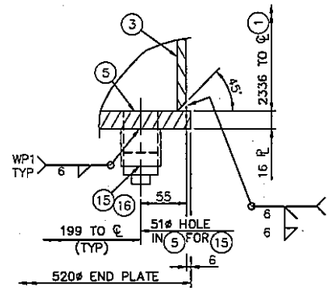

DETAIL "E"

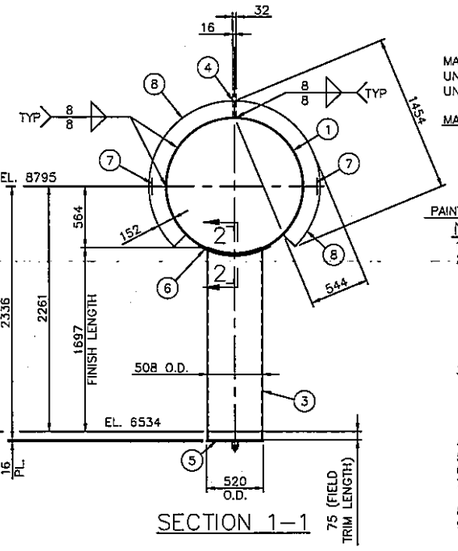

SECTION 1-1

TYPICAL WELD PREP

AFTER HYDRO-TESTING
(SEE DETAIL "Z" ON DWG. 3863-T6-028 FOR WELD DETAIL TO TOP GAS FUEL BUNDLE)

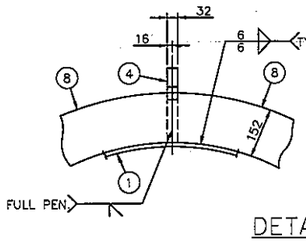

DETAIL "C"

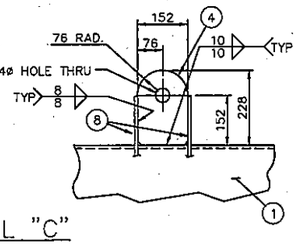

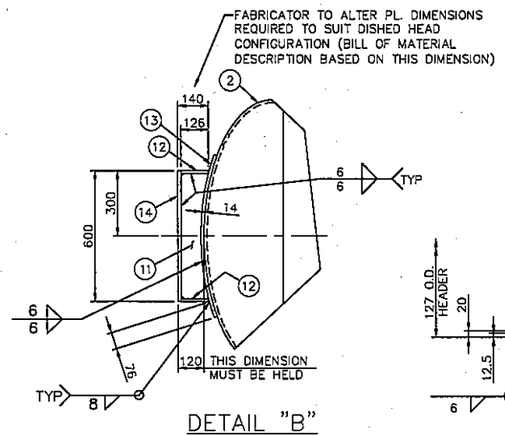

DETAIL "B"

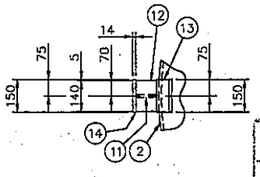

DETAIL "D"

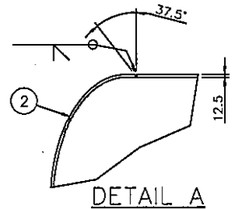

DETAIL A

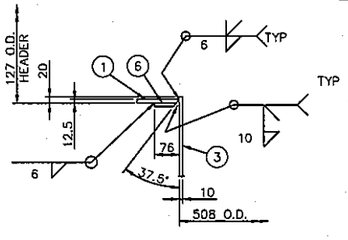

SECTION 2-2

ALL ELEVATIONS ON THIS DRAWING ARE REFERENCED FROM PLANT LEVEL 0.00 (T.O.C. MIDREX FURNACE SLAB) WHICH CORRESPONDS TO LEVEL +29.20 METERS NGA.

BILL OF MATERIAL

FOR: HEAT RECOVERY SYSTEM- HEADER DETAILS

DWG: 3863-T6-118

ITEM	QTY	DESCRIPTION	WEIGHT (kg) EA. PIECE	WEIGHT (kg) TOTAL 2 MODULES	MAT'L	REMARKS
DETAIL T6-118TGFO-1 (2 REQ'D.) AS SHOWN						WT. EA. 5564 kg
1	2	PL 13 x 3951 x 8914 LG (1270 OD)	3508	7016	A36	SEE NOTE 11
2	4	FORMED HEAD: 2:1 ELLIPSOIDAL 1270 O.D. x 13mm THK.	158	632	A36	
3	12	PL 10 x 1585 X 1772 LG. (508 OD)	218	2616	A36	SEE NOTE 11
4	4	PL 32 x 152 x 228 LG.	9	36	A36	CUT
5	12	PL 16 x 520 O.D.	26	312	A36	CUT
6	12	PL 10 x 520 I.D. x 660 O.D.	9	108	A36	CUT AND ROLLED
7	4	WT 5 x 15 X 305 LG.	5	20	SEE MAT'L NOTE	CUT TO 120 DEEP
8	16	PL 10 x 544 x 1454 LG.	19	304	A36	CUT
11	2	PL 14 x 126 x 572 LG.	8	16	A36	CUT TO FIT
12	4	PL 14 x 140 x 150 LG.	2	8	A36	
13	2	PL 14 x 150 x 762 LG.	12	24	A36	ROLLED
14	2	PL 14 x 150 x 600 LG.	10	20	A36	
15	12	PIPE CPLG 1 1/2" NPS STD. THD.	2	24	A105	
16	12	PIPE PLUG 1 1/2" NPS STD. THD.	1	12	A105	

MATERIAL SHOWN IS FOR 2 (TWO) CASING MODULES
UNIT #1 (AS SHOWN)
UNIT #2 (OPP. HAND) } UNLESS NOTED OTHERWISE

MATERIAL NOTE: ALL MATERIAL SHALL CONFORM TO MIDREX SPEC. FOR PIPING 3863-PP-01S (SECTION C8) (UNLESS NOTED)

ALL STRUCTURAL MATERIAL SHALL CONFORM TO SPEC'S SHOWN ON MIDREX STRUCTURAL GENERAL NOTES DWG. 3863-C3-001.

PAINT NOTE: FOR PAINT SYSTEM SEE MIDREX SPECIFICATION 3863-GN-12S

NOTES:

1. ALL DIMENSIONS GIVEN IN MILLIMETERS.
2. BILL OF MATERIAL: LENGTH OF ROLLED SHAPES AND ALL PLATE DIMENSIONS (EXCEPT ROLLED DUCT PLATE THICKNESS) GIVEN IN MILLIMETERS. ALL WEIGHTS ARE GIVEN IN KILOGRAMS. PLATE WIDTH GIVEN IN BILL OF MATERIAL IS THE ACTUAL CIRCUMFERENCE ALONG THE CENTERLINE OF THE PLATE. ADDITIONAL MATERIAL REQUIRED FOR ENGAGEMENT OF ROLLS TO BE DETERMINED AND ADDED BY FABRICATOR AS REQUIRED.
3. SHOP REQUIRED WELDED DUCT SEAMS, BOTH LONGITUDINAL AND TRANSVERSE SHALL NOT BE LOCATED IN THE VICINITY OF:
   (a) INTERSECTING DUCTS OR THEIR REINFORCEMENT PLATES
   (b) DUCT SUPPORT LEGS
   (c) LIFTING OR HANGER LUGS
4. WELDING TO CONFORM TO APPROVED WELDING PROCEDURES.
5. ALL HOLES TO BE AS NOTED AND FREE OF BURRS.
6. ALL WELDS TO BE CONTINUOUS AND AIRTIGHT UNLESS NOTED.
7. ALL FLANGE OR BEARING SURFACES TO BE SMOOTH, EVEN, AND FREE OF BURRS.
8. FOR SPECIFICATION NOTES SEE DWG. T6-101.
9. AT TIME OF INSTALLATION OF COLLECTOR, CUT PIPES AS INDICATED ONLY AFTER VERIFYING BUNDLE CONNECTIONS ARE TRUE & LEVEL.
10. HEADERS TO BE HYDROSTATICALLY PRESSURE TESTED AT 70 PSI FOR 30 MINUTES WITHOUT LEAKS.
11. FOR BILL/MATERIAL ITEMS #1, & 3, THE FABRICATOR HAS THE OPTION TO PROVIDE PIPE AS PER MIDREX SPECIFICATION 3863-PP-01S (SPEC. C8) IN LIEU OF THE ROLLED PLATE NOTED IN THE BOM. (PROVIDED THAT THE WALL THICKNESS IS EQUAL TO OR GREATER THAN THE PLATE THICKNESS SHOWN.)

REFERENCE DRAWINGS:

T6-020 – HEAT RECOVERY SYSTEM – MASTER DRAWING LIST
T6-100 HEAT RECOVERY SYSTEM – BYPASS AIR & HEADER ARRANGEMENT PLAN

DATE / EIN NO.	REVISION DESCRIPTION	BY	CHKR	ENGR	APVD	PROJ ENGR
1/18/17	REVISE TO ANSI MATERIALS PER APPROVAL OF 11-30-16	SLA				
10/6/2016	ISSUED FOR CONSTRUCTION	ACM SLA				

CERTIFIED CONSTRUCTION ISSUE
THERMAL TRANSFER CORPORATION
BY: SLA DATE: 1-18-17

FABRICATION TOLERANCE UNLESS OTHERWISE SPECIFIED
0" - 18" = ±1/16"
18" - 50" = ±1/8"
50" - 100" = ±3/16"
100" & ABOVE = ±1/4" ± 1°
TOLERANCE TO BE NON-ACCUMULATIVE

MATERIAL LISTED ABOVE FOR ONE (1) REQUIRED

THIS DRAWING IS THE PROPERTY OF THERMAL TRANSFER CORP. IT IS NOT TO BE TRACED OR REPRODUCED IN ANY MANNER, NOR USED FOR FURNISHING INFORMATION TO OTHERS, WITHOUT OUR CONSENT. IT IS TO BE USED ONLY AS A MEANS OF REFERENCE IN REGARD TO EQUIPMENT DESIGNED AND/OR SUPPLIED BY US AND IS TO BE RETURNED ON REQUEST.

PLOT SCALE 1:25

THERMAL TRANSFER CORP.
DUQUESNE, PA USA
A Subsidiary of the Hamon Corporation

MIDREX
MIDREX TECHNOLOGIES, INC.
Charlotte, N.C., USA

THIS DOCUMENT DISCLOSES CONFIDENTIAL, PROPRIETARY INFORMATION OF MIDREX. IT MAY NOT BE REPRODUCED OR DISCLOSED WITHOUT WRITTEN PERMISSION, AND IS NOT TO BE USED IN ANY WAY DETRIMENTAL TO THE INTEREST OF MIDREX.

HEAT RECOVERY SYSTEM HEADERS/BY PASS AIR DUCT SYS. TOP GAS FUEL OUTLET HEADER DETAILS

MIDREX PROJ. NO. 3863	SPECIFICATION NO.
EQUIPMENT NO.	REQUISITION NO.
SCALE: 1:25 / SIZE: A1 / MIDREX DWG No. 3863-T6-118	REV. B
CLIENT DWG NO. P1-DRI-MPW-M-HEAR-GA-G118	PW DWG NO. 185030G33118

ALUMINUM QATAR STEEL
PAUL WURTH SMS group
PAUL WURTH ITALIA S.p.A.

Document for : 1762
☑ Original ☐ Copy No. :
Received by : Sunee 7/12/17
Reviewed By :
Approved by :