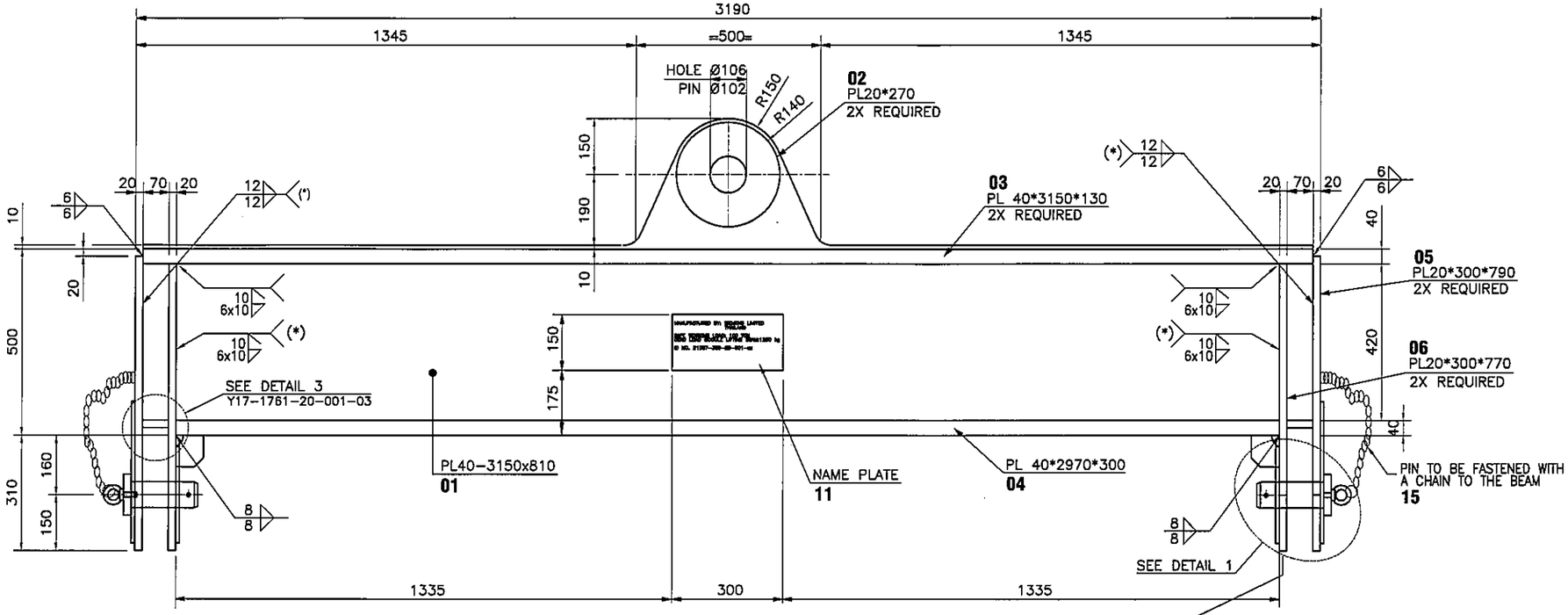

MODULE LIFTING BEAM

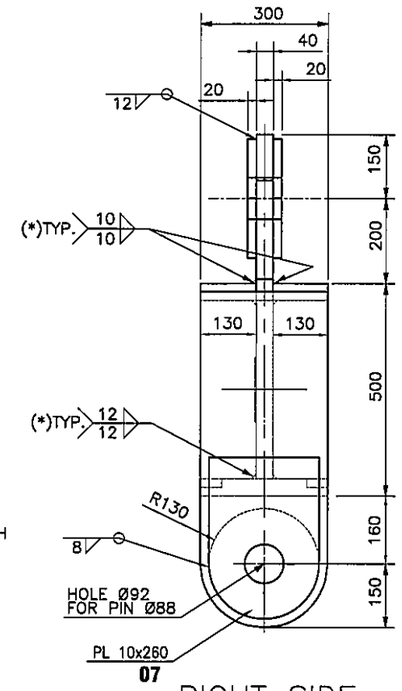

RIGHT SIDE

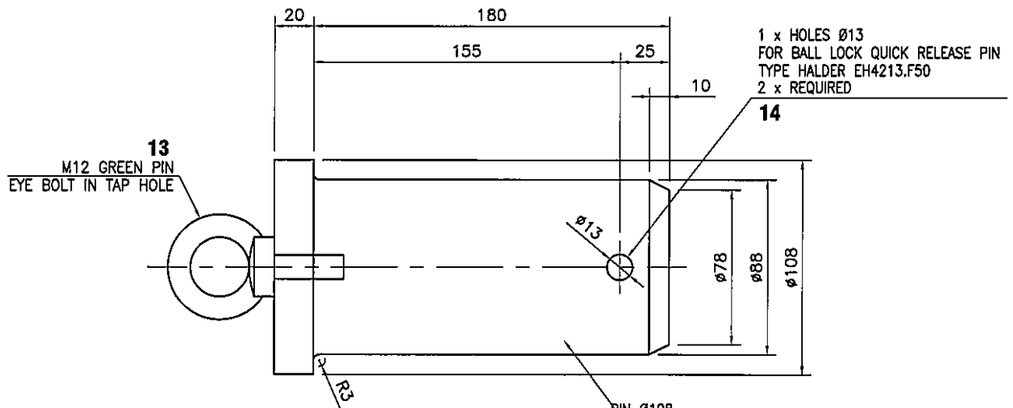

DETAIL 1

2 x REQUIRED

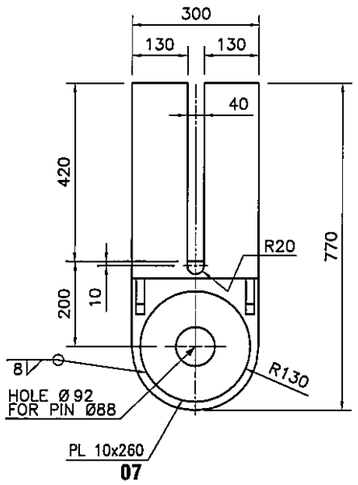

NOTE :

7.) WELDS INDICATED WITH (*) ARE ESSENTIAL WELDS, ALL OTHER WELDS ARE SECUNDARY WELDS
SEE SPEC. NO. 21057-309-00 INCLUDING IKZ09-309-10

NEM is acting as a service provider of Siemens Ltd. Thailand.
All decisions have to be finaly approved by Siemens Ltd. Thailand.
Siemens Ltd. Thailand has to be involved in all correspondences.

VIPCO DWG.NO. Y17-1761-20-001-02

VISAVAKIT PATANA CORPORATION LIMITED
OFFICE :215/148-149 Prachaniwat 1 Road, Bangsue, Bangkok 10800 Tel: 0-2585-2556-8 Fax: 0-2587-8068
PLANT 1 :28/2 Moo4, Soi Chai Ua, Pathumthani 12000 Tel: 0-2975-2811-4 Fax: 0-2975-2815
PLANT 2 :52 Moo7, Kubangluang, Ladlumkaew, Pathumthani 12140 Tel: 0-2979-4001-9 Fax: 0-2979-4010
www.vipco-thai.com Email : vipco@vipco-thai.com

DRAWING NO.	DESCRIPTION
	REFERENCE DRAWINGS

Client: ELECTRICITY GENERATING AUTHORITY OF THAILAND

Project: SOUTH BANGKOK POWER PLANT REPLACEMENT PROJECT PHASE 1

Contractor: THE CONSORTIUM OF SIEMENS AKTIENGESELLSCHAFT, SIEMENS LIMITED AND MARUBENI CORPORATION

NEM Our Energy, Your Power

NEM Doc. no.: 21057-380-20-001
PROJECTION:
ECCN: N
EAR: N
Document Status

Project: SOUTH BANGKOK REPLACEMENT PROJECT
PC: TH1009
UNID: 800444004
JCC Type: MTB010
Contents code: 00UHA
Variant: –
Serial no: –
Original no: –
Checked with: –
Dept: –

Rev	Date	Drawn	Appr	Details of revision
00	2017-12-18	P.PIYAPONG	K.KITTITAS	ISSUE FOR CONSTRUCTION

Model: –
Format: A3
Scale: N/A
Sheets: –

	Date	Name
Appr	21/12/17	
Chk'd P		
Chk'd 1	21/12/17	Chaichai
Drawn	2017-12-18	P.PIYAPONG

Title:
SHOP DRAWING
MODULE LIFTING BEAMS
–
–

Handling: RESTRICTED

SIEMENS

CLIENT NO: –
A1
Rev: 00
Sheet no: –

NEM Energy b.v., Stadhouderslaan 900, 2382BL, Zoeterwoude, The Netherlands