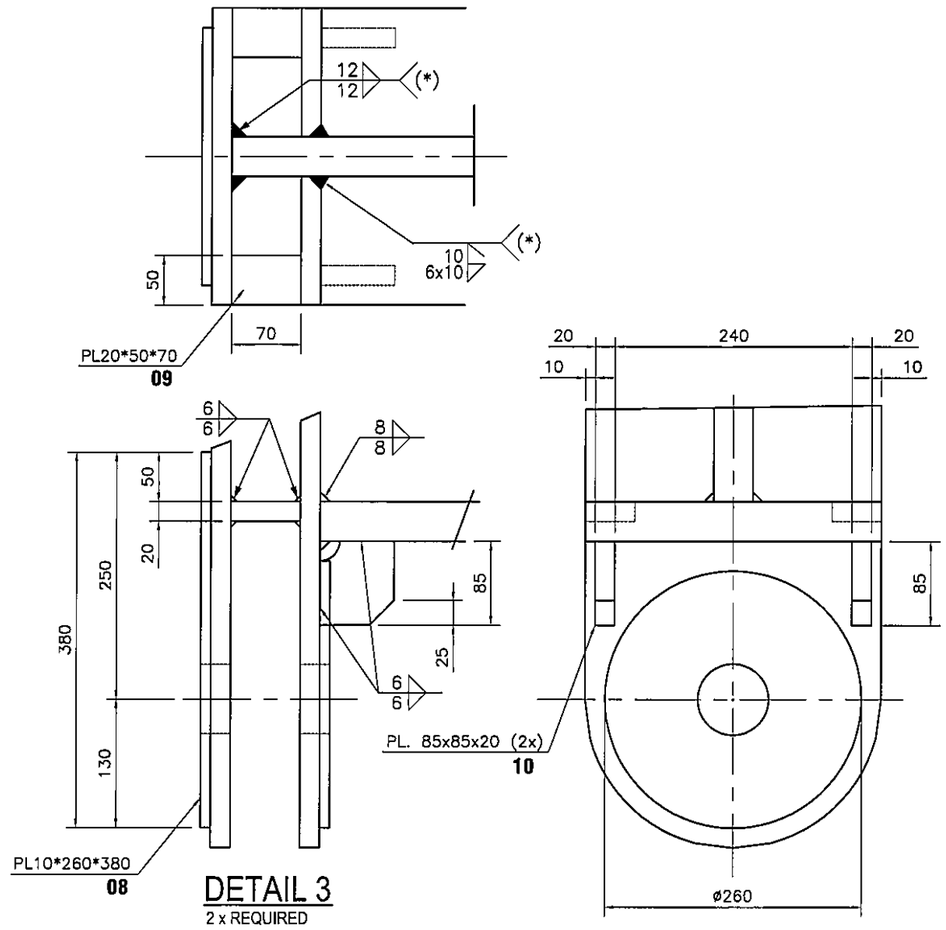

DETAIL 3

2 x REQUIRED

NOTE :

7.) WELDS INDICATED WITH (*) ARE ESSENTIAL WELDS, ALL OTHER WELDS ARE SECUNDARY WELDS SEE SPEC. NO. 21057-309-00 INCLUDING IKZ09-309-10

VIPCO DWG.NO.	Y17-1761-20-001-03

VISAVAKIT PATANA CORPORATION LIMITED

OFFICE :215/148-149 Pracharad 1 Road, Bangsue, Bangkok 10800 Tel: 0-2585-2556-8 Fax: 0-2587-8068
PLANT 1 :28/2 Moo4, Soi Chai Ua, Pathumthani 12000 Tel: 0-2975-2811-4 Fax: 0-2975-2815
PLANT 2 :52 Moo7, Kubangluang, Ladlumkaew, Pathumthani 12140 Tel: 0-2979-4001-9 Fax: 0-2979-4010
www.vipco-thai.com Email : vipco@vipco-thai.com

DRAWING NO.	DESCRIPTION

REFERENCE DRAWINGS

Client: ELECTRICITY GENERATING AUTHORITY OF THAILAND

Project: SOUTH BANGKOK POWER PLANT REPLACEMENT PROJECT PHASE 1

Contractor: THE CONSORTIUM OF SIEMENS AKTIENGESELLSCHAFT, SIEMENS LIMITED AND MARUBENI CORPORATION

NEM Energy. Our Energy, Your Power

NEM Doc. no: 21057-380-20-001

PROJECTION:

ISSUE: N

Rev: N

Document Status

Project: SOUTH BANGKOK REPLACEMENT PROJECT

PC: TH1009

UNID: 800444011

DOC Type: MTB010

Contents code: 00UHA

Variant: -

Serial no: -

Origin no: -

Created with: -

Sheet: -

Rev	Date	Drawn	Appr	Details of revision
00	2017-12-18	P.PIYAPONG	K.KITTITAS	ISSUE FOR CONSTRUCTION

Weight: -

Format: A3

Scale: N/A

Sheets: -

	Date	
Appr	21/12/17	
Chkd 2		
Chkd 1	21/12/17	Chaichai
Drawn	2017-12-18	P.PIYAPONG

Title: SHOP DRAWING
MODULE LIFTING BEAMS
-
-

Handling: RESTRICTED

SIEMENS

CLIENT NO: -

Rev: 00

A1

Sheet no: -

NEM is acting as a service provider of Siemens Ltd. Thailand.
All decisions have to be finaly approved by Siemens Ltd. Thailand.
Siemens Ltd. Thailand has to be involved in all correspondences.

NEM Energy b.v., Stadhouderslaan 900, 2382BL, Zoeterwoude, The Netherlands