Document for : 1762
Original ☐ Copy No. :
Received by : Sunee 7/12/17
Reviewed By :
Approved by :

SCALING RULES: 1:100 1:75 1:50 1:25 1:20

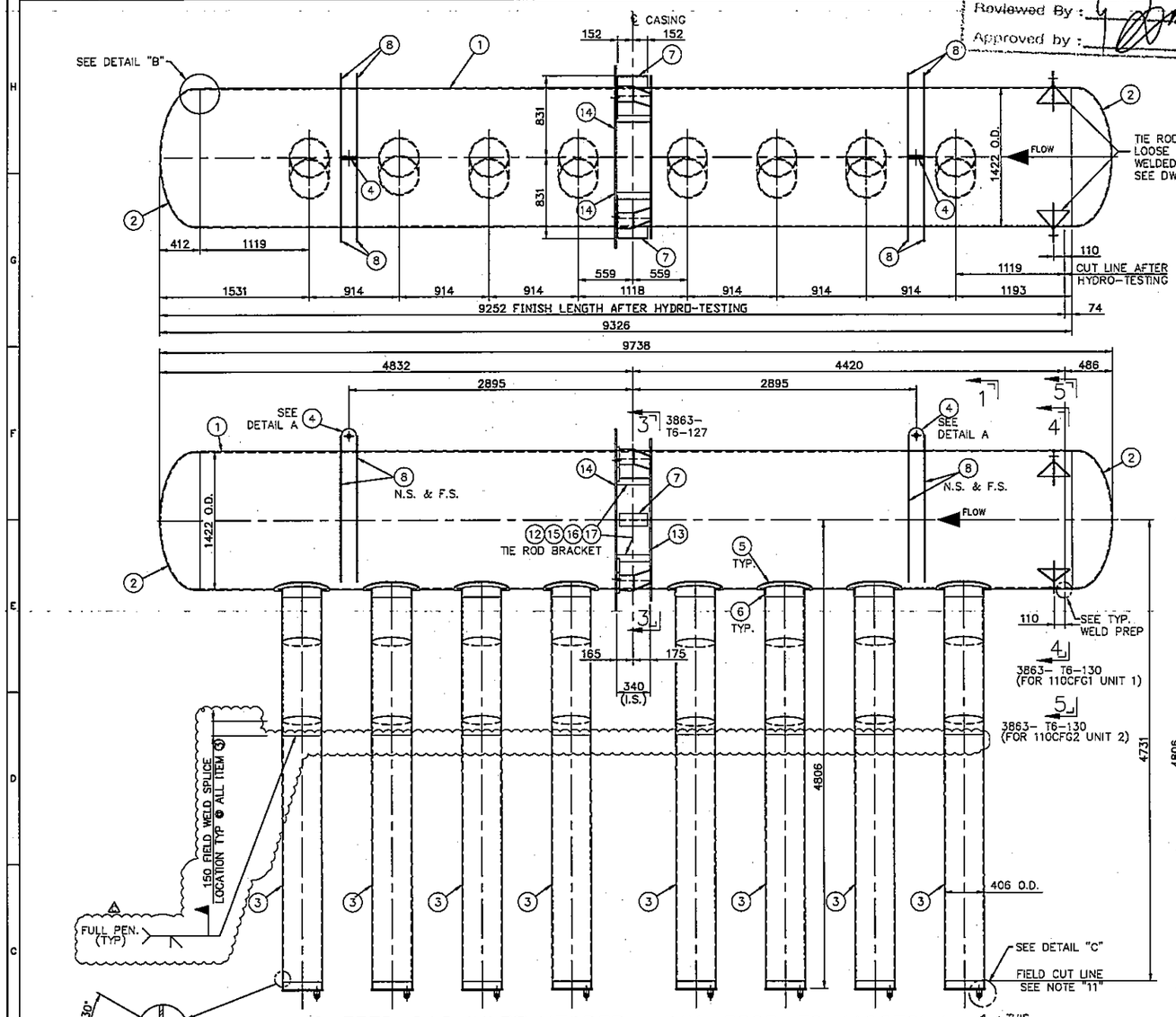


COLD FEED GAS INLET HEADER – MK. 3863-T6-110CFGI 1
ONE REQ'D (UNIT 1 AS SHOWN)

COLD FEED GAS INLET HEADER – MK. 3863-T6-110CFGI 2
ONE REQ'D (UNIT 2 OPP. HAND)

SECTION 1-1

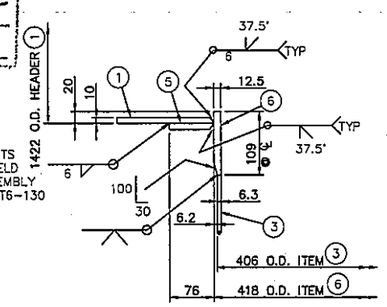


SECTION 2-2
TYPICAL DETAIL AT DOWNCOMER

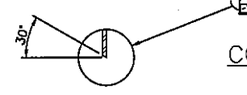

TYPICAL WELD PREP
AFTER HYDRO-TESTING
(SEE DETAIL "Z" ON DWG. 3863-T6-027 FOR WELD DETAIL TO COLD FEED GAS BUNDLE).

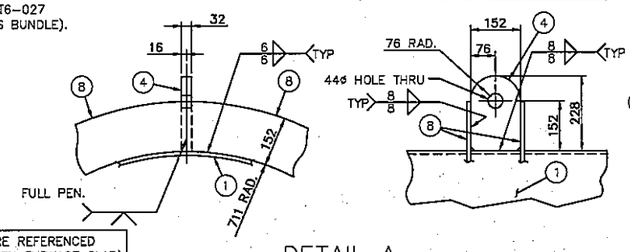


DETAIL A

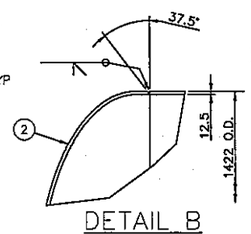

DETAIL B

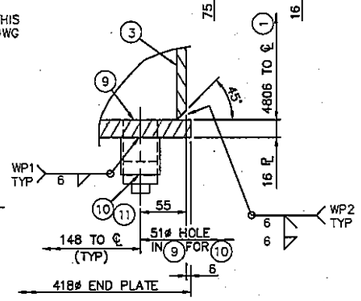


DETAIL "C"

ALL ELEVATIONS ON THIS DRAWING ARE REFERENCED FROM PLANT LEVEL 0.00 (T.O.C. MIDREX FURNACE SLAB) WHICH CORRESPONDS TO LEVEL +29.20 METERS NGA.

REFERENCE DRAWINGS:
T6-020 – HEAT RECOVERY SYSTEM – MASTER DRAWING LIST
T6-100 HEAT RECOVERY SYSTEM – BYPASS AIR & HEADER ARRANGEMENT PLAN

## BILL OF MATERIAL

FOR: HEAT RECOVERY SYSTEM– HEADER DETAILS

DWG: 3863–T6–110

| ITEM | QTY | DESCRIPTION | WEIGHT (kg) EA. PIECE | WEIGHT (kg) TOTAL 2 MODULES | MAT'L | REMARKS |
|---|---|---|---|---|---|---|
| DETAIL T6-110-CFGI 1 (ONE REQ'D AS SHOWN) | | | | | WT. EA. 6418 kg | |
| DETAIL T6-110-CFGI 2 (ONE REQ'D OPP HAND) | | | | | WT. EA. 6418 kg | |
| 1 | 2 | PL 10 x 4435 X 8914 LG. (1422 OD) | 3102 | 6204 | A36 | SEE NOTE 12 |
| 2 | 4 | FORMED HEAD: 2:1 ELLIPSOIDAL | 221 | 884 | A36 | |
| | | 1422 O.D. x 10mm THK. | | | | |
| 3 | 16 | PL 6 x 1256 x 4036 LG. (406 OD) | 251 | 4016 | A36 | SEE NOTE 12 |
| 4 | 4 | PL 32 x 152 x 228 LG. | 9 | 36 | A36 | CUT |
| 5 | 16 | PL 10 x 570 O.D. x 418 I.D. | 10 | 160 | A36 | CUT AND ROLLED |
| 6 | 16 | PL 12.5 x 1274 x 141 LG. (418 O.D.) | 18 | 288 | A36 | CUT |
| 7 | 4 | WT 5 x 15 x 304 LG. | 5.5 | 22 | SEE MAT'L NOTE | CUT TO 120 DEEP |
| 8 | 16 | PL 12 x 591 x 1595 LG. | 14 | 224 | A36 | CUT |
| 9 | 16 | PL 16 x 418 OD | 17 | 272 | A36 | |
| 10 | 16 | PIPE CPLG 1 1/2" NPS STD. THD. | 2 | 32 | A105 | |
| 11 | 16 | PIPE PLUG 1 1/2" NPS STD. THD. | 1 | 16 | A105 | |
| 12 | 8 | PL 16 x 336 x 363 LG. | 6 | 48 | A36 | |
| 13 | 2 | PL 16 x 1662 O.D. x 1430 I.D. | 70 | 140 | A36 | CUT |
| 14 | 2 | PL 16 x 1662 O.D. x 1430 I.D. | 139 | 278 | A36 | CUT |
| 15 | 8 | PL 25 x 199 x 300 LG. | 12 | 96 | A36 | |
| 16 | 6 | PL 12 x 144 x 212 LG. | 3 | 24 | A36 | |
| 17 | 16 | PL 12 x 193 x 311 LG. | 6 | 96 | A36 | |

MATERIAL SHOWN IS FOR 2 (TWO) HEADERS
UNIT #1 (AS SHOWN) } UNLESS NOTED OTHERWISE
UNIT #2 (OPP. HAND)

MATERIAL NOTE: ALL MATERIAL SHALL CONFORM TO MIDREX SPEC. FOR PIPING 3863-PP-01S (SECTION C2) (UNLESS NOTED)

ALL STRUCTURAL MATERIAL SHALL CONFORM TO SPEC'S SHOWN ON MIDREX STRUCTURAL GENERAL NOTES DWG. 3863-C3-001.

PAINT NOTE: FOR PAINT SYSTEM SEE MIDREX SPECIFICATION 3863-GN-12S

NOTES:
1. ALL DIMENSIONS GIVEN IN MILLIMETERS.
2. BILL OF MATERIAL:
LENGTH OF ROLLED SHAPES AND ALL PLATE DIMENSIONS (EXCEPT ROLLED DUCT PLATE THICKNESS) GIVEN IN MILLIMETERS. ALL WEIGHTS ARE GIVEN IN KILOGRAMS. PLATE WIDTH GIVEN IN BILL OF MATERIAL IS THE ACTUAL CIRCUMFERENCE ALONG THE CENTERLINE OF THE PLATE. ADDITIONAL MATERIAL REQUIRED FOR ENGAGEMENT OF ROLLS TO BE DETERMINED AND ADDED BY FABRICATOR AS REQUIRED.
3. SHOP REQUIRED WELDED DUCT SEAMS, BOTH LONGITUDINAL AND TRANSVERSE SHALL NOT BE LOCATED IN THE VICINITY OF:
(a) INTERSECTING DUCTS OR THEIR REINFORCEMENT PLATES
(b) DUCT SUPPORT LEGS
(c) LIFTING OR HANGER LUGS
4. MATERIAL CERTS & TRACIBILITY DOCUMENT REQUIRED INCLUDING TRANSFER OF HEAT NUMBERS.
5. HEADERS TO BE HYDROSTATICALLY PRESSURE TESTED AT 70 psi FOR 30 MINUTES WITHOUT LEAKS.
6. WELDING TO CONFORM TO APPROVED WELDING PROCEDURES.
7. ALL HOLES TO BE AS NOTED AND FREE OF BURRS.
8. ALL WELDS TO BE CONTINUOUS AND AIRTIGHT UNLESS NOTED.
9. ALL FLANGE OR BEARING SURFACES TO BE SMOOTH, EVEN, AND FREE OF BURRS.
10. FOR SPECIFICATION NOTES SEE DWG. T6-101.
11. AT TIME OF INSTALLATION OF COLLECTOR, CUT PIPES AS INDICATED ONLY AFTER VERIFYING BUNDLE CONNECTIONS ARE TRUE & LEVEL.
12. FOR BILL/MATERIAL ITEMS #1, & 3, THE FABRICATOR HAS THE OPTION TO PROVIDE PIPE AS PER MIDREX SPECIFICATION 3863-PP-01S (SPEC. C2) IN LIEU OF THE ROLLED PLATE NOTED IN THE BOM. (PROVIDED THAT THE WALL THICKNESS IS EQUAL TO OR GREATER THAN THE PLATE THICKNESS SHOWN.)

| DATE / ENG. NO. | REVISION DESCRIPTION | BY | CHKD | CHKR | APVD | PROJ. ENGR. |
|---|---|---|---|---|---|---|
| 6/6/17 | ADD FIELD WELD SPLICE LOCATION | SLA | | | | |
| 1/18/17 | REVISE TO ANSI MATERIALS PER APPROVAL OF 11-30-16 | SLA | | | | |
| 10/6/2016 | ISSUED FOR CONSTRUCTION | ACM | SLA | | | |

CERTIFIED CONSTRUCTION ISSUE
THERMAL TRANSFER CORPORATION
BY: SLA DATE: 6-6-17

FABRICATION TOLERANCE UNLESS OTHERWISE SPECIFIED
0' – 18' = ±1/16"
18' – 50' = ±1/8"
50' – 100' = ±3/16"
100' & ABOVE = ±1/4" ± 1'
TOLERANCE TO BE NON-ACCUMULATIVE

MATERIAL LISTED ABOVE FOR ONE ( 1 ) REQUIRED

THIS DRAWING IS THE PROPERTY OF THERMAL TRANSFER CORP. IT IS NOT TO BE TRACED OR REPRODUCED IN ANY MANNER, NOR USED FOR FURNISHING INFORMATION TO OTHERS, WITHOUT OUR CONSENT. IT IS TO BE USED ONLY AS A MEANS OF REFERENCE IN REGARD TO EQUIPMENT DESIGNED AND/OR SUPPLIED BY US AND IS TO BE RETURNED ON REQUEST.

PLOT SCALE 1:25

THERMAL TRANSFER CORP.
DUQUESNE, PA USA
*A Subsidiary of the Hamon Corporation*

MIDREX TECHNOLOGIES, INC.
Charlotte, N.C., USA

THIS DOCUMENT DISCLOSES CONFIDENTIAL, PROPRIETARY INFORMATION OF MIDREX. IT MAY NOT BE REPRODUCED OR DISCLOSED WITHOUT WRITTEN PERMISSION, AND IS NOT TO BE USED IN ANY WAY DETRIMENTAL TO THE INTEREST OF MIDREX.

HEAT RECOVERY SYSTEM
HEADERS/BY PASS AIR DUCT SYS.
COLD FEED GAS INLET HEADER DETAILS

MIDREX PROJ. NO. 3863 | SPECIFICATION NO.
EQUIPMENT NO. | REQUISITION NO.
SCALE: 1:25 | SIZE: A1 | MIDREX DWG No. 3863-T6-110 | REV. C
CLIENT DWG NO. P1-DRI-MPW-M-HEAR-GA-G110 | PW DWG NO. 185030G33110

ALGERIAN QATARI STEEL
PAUL WURTH SMS group
PAUL WURTH ITALIA S.p.A.