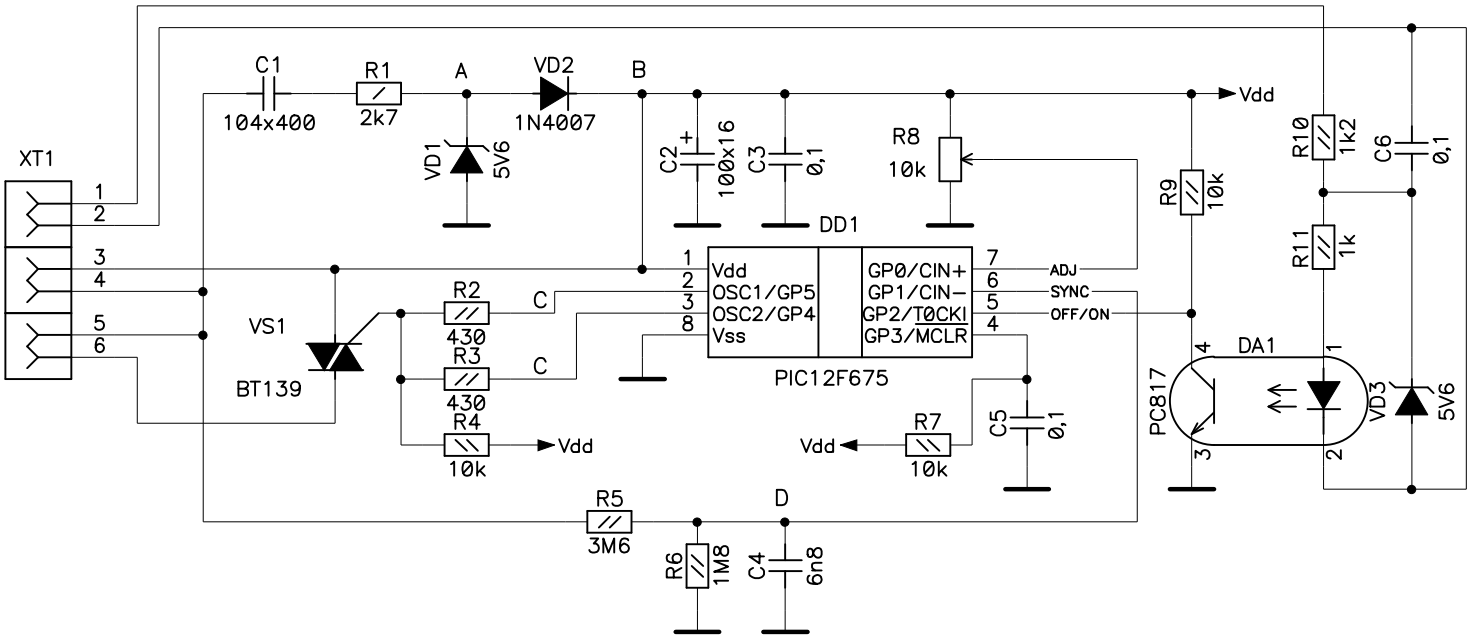

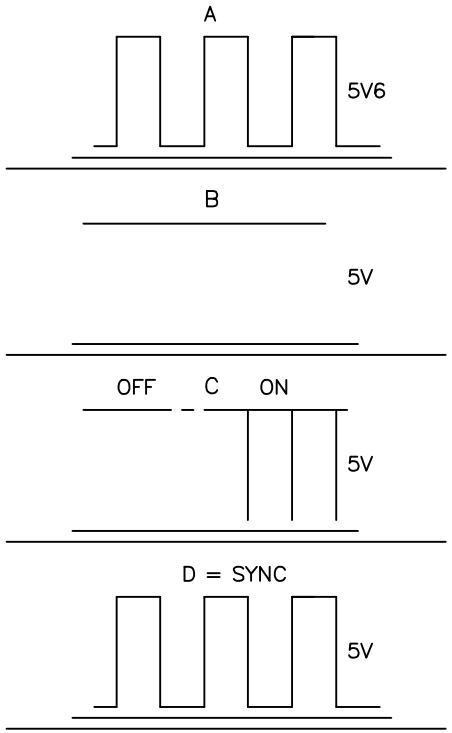

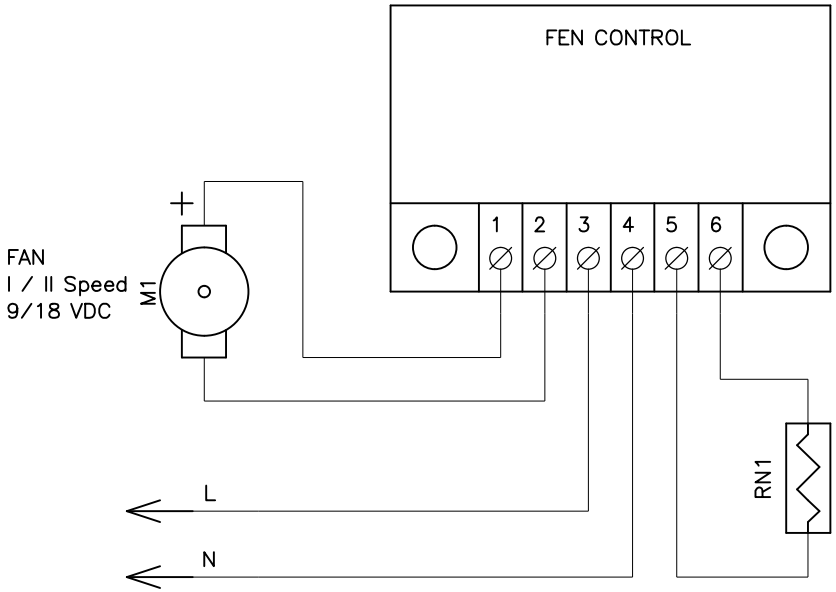

Title	Power regulator for heat gun.	
Size A4	Number	Rev
Date	Drawn by NVA1773	
Filename	Sheet of	