UNIVERSITY OF CALIFORNIA, DAVIS

Department of Electrical and Computer Engineering

EEC113: Power Electronic Circuits

Homework #3

1) In a basic PMOS LDO, the following parameters are given:

   - $V_o = 2.5V$, $I_L = 50mA$
   - Low-frequency open-loop gain = 80dB
   - $f_{p1} = 200\ Hz$ (due to R_o and C_{gs})

   Find the phase margin of the LDO when:

   (a) A 2.2μF Tantalum capacitor with ESR of 1Ω is used as the load capacitor
   (b) A 40nF ceramic capacitor with ESR of 1.25mΩ is added in parallel with the Tantalum capacitor.

For the following problems, please read Section 2.2 Power and Energy and Section 2.5 Effective Values: RMS from the textbook:

2) **Problem 2.2:** The voltage across a 10-Ω resistor is $v(t) = 170\ sin\ (377t)\ V$. Determine (a) an expression for instantaneous power absorbed by the resistor, (b) the peak power, and (c) the average power.

3) **Problem 2.5:** The voltage and current for a device (using the passive sign convention) are periodic functions with $T = 20\ ms$ described by

$$v(t) = \begin{cases} 10\text{ V} & 0 < t < 14\text{ ms} \\ 0 & 14\text{ ms} < t < 20\text{ ms} \end{cases}$$

$$i(t) = \begin{cases} 7\text{ A} & 0 < t < 6\text{ ms} \\ -5\text{ A} & 6\text{ ms} < t < 10\text{ ms} \\ 4\text{ A} & 10\text{ ms} < t < 20\text{ ms} \end{cases}$$

   Determine (a) the average voltage, (b) the average current, (c) the instantaneous power, (d) the average power, and (e) the energy absorbed by the device in each period.

4) **Problem 2.6:** Determine the average power absorbed by a 12-V dc source when the current into the positive terminal of the source is that given in Prob. 2-5

5) **Problem 2.8:** A current source of $i(t) = 2 + 6\ sin(2\pi 60t)$ A is connected to a load that is a series combination of a resistor, an inductor, and a dc voltage source (current into the positive terminal). If $R = 4\ \Omega, L = 15\ mH$, and $V_{dc} = 6\ V$, determine the average power absorbed by each element.

6) **Problem 2.18:** Determine the rms values of the voltage and current waveforms in Prob. 2-5.

Problem 6.3

The basic dc-dc converter of Fig. 6-2*a* has a source of 100 V and a load resistance of 10 Ω. The duty ratio of the switch is $D = 0.6$, and the switching frequency is 1 kHz. Determine (*a*) the average voltage across the load, (*b*) the rms voltage across the load, and (*c*) the average power absorbed by the load. (*d*) What would happen if the switching frequency were increased to 2 kHz?

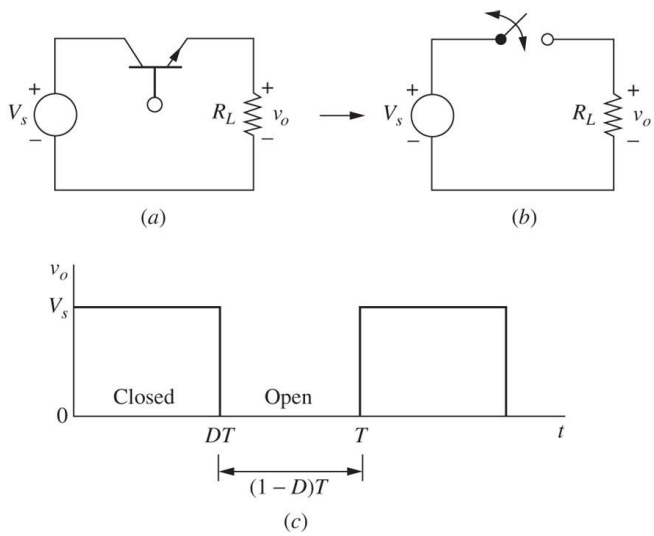

Figure 6.2