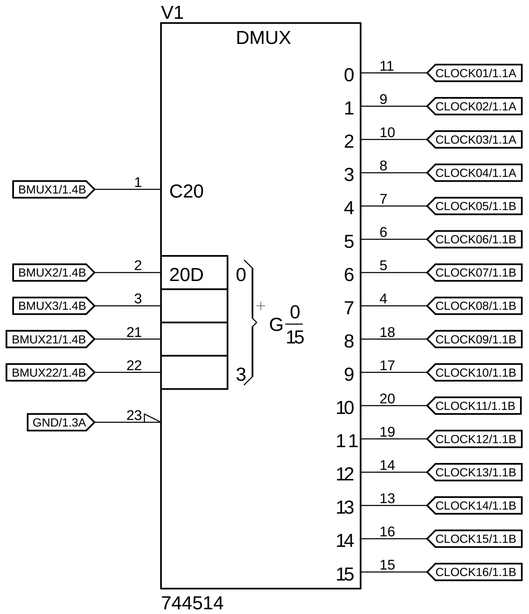

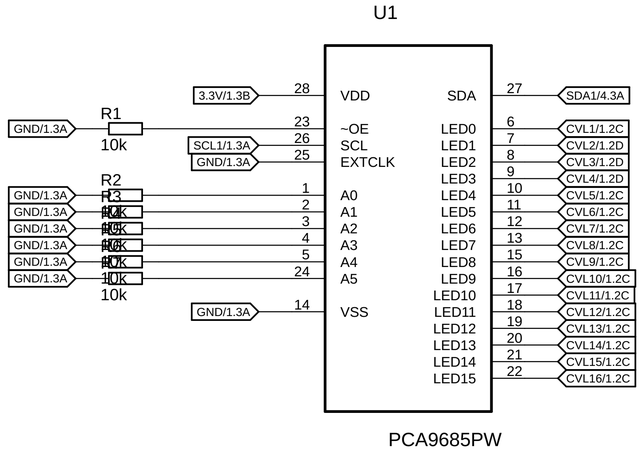

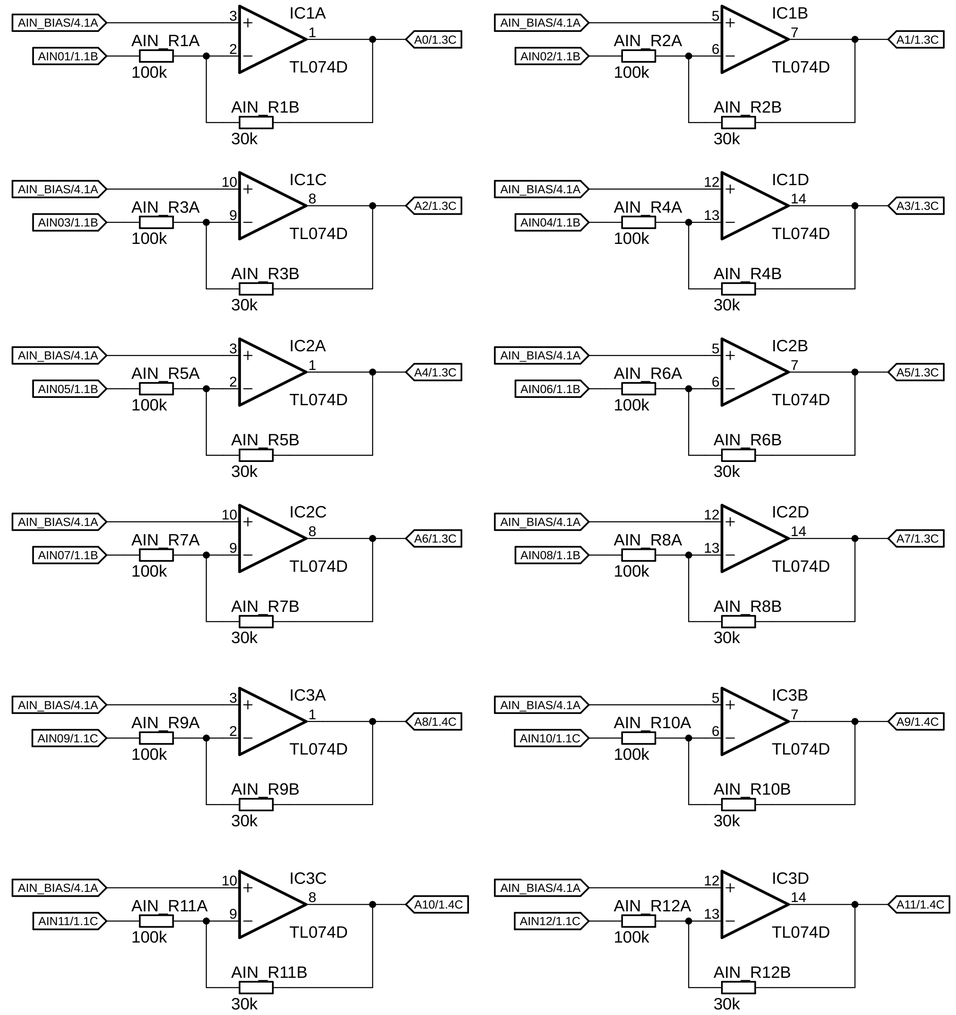

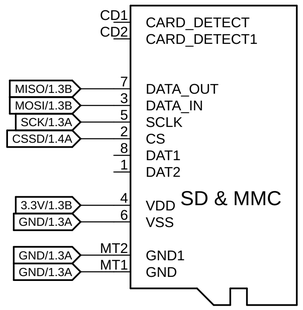

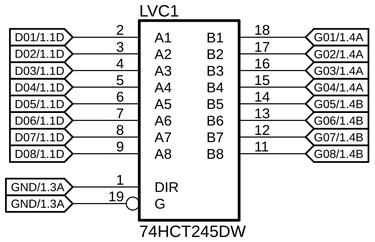

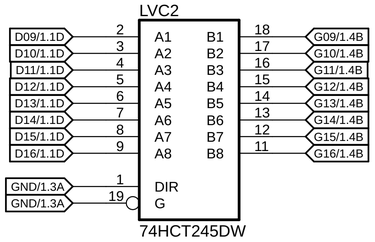

TITLE: nw2s-bx-main-0.1.0	
Document Number:	REV:
Date: 2/3/21 5:15 PM	Sheet: 2/4